Carrier

United Technologies

DESIGNING INNOVATIVE SOLUTIONS

HEATING, VENTILATION AND AIR CONDITIONING

CATALOGUE

2016/2017

Index

SERIES	PAGE
09	
NEW 09PE	290
NEW 09VE	298
10	
NEW 10TE	350
16	
NEW 16LJ -A-01-82	304
16NK 11- 81	346
16TJ 11-53	330
19	
19XR/XRV single stage	282
19XR/XRV double stage	286
23	
23XR/XRV	278
30	
30AWH 004-015	376
30HXC 080-375	240
NEW 30PA / PAC	72
NEW 30PH / PHC	442
30RB 008-015	40
30RB 017-040	50
30RB 602-802	148
30RBM / 30RBP 160-520	128
30RBS 039-160	94
30RBSY 039-160	108
NEW 30RBV 017-021	58
30RBY 017-040	68
30RQ 017-040	432
30RQM / 30RQP 160-520	498
30RQS 039-160	466
30RQSY 039-160	480
NEW 30RQV 017-021	422
30RW / 30RWA 110-300	234
30WG / 30WGA 020-090	212
30XA 252-1702	170
30XAS 242-482	158
30XAV 500-1150	196
NEW 30XA-ZE / XAV-ZE	210
30XW 254-1762	248
30XWH 254-1762	536
30XW-V 580-1710	262
30XWHV 580-1710	558
NEW 30XWP-ZE / XWV-ZE	274
NEW 30XWHP-ZE / XWHV-ZE	570
35	
35BD/SR	696
36	
NEW 36XB	578
37	
37AG	700
37AH	700
37AS	700

SERIES	PAGE
38	
38AW / 80AW	358
NEW 38HBHF / 40HBHF	788
NEW 38NZNF / 40NZNF	798
38RBS	742
39	
NEW 39CQ	704
NEW 39CP	722
NEW 39CZ	738
39HQ	734
NEW 39HX	710
39SQ	724
39SQC / R / P	728
42	
NEW 42AM	582
42BJ	670
42GM	682
42GR	686
42GW	596
NEW 42KY	610
42N	618
NEW 42NL / NH	638
48	
NEW 48EN / EH	838
50	
NEW 50CJ	750
NEW 50CO	760
NEW 50EN / EH 20 - 90	818
NEW 50EN / EH 92- 185	826
NEW 50HB / HF	766
NEW 50NZ / NF	970
61	
61AF 014-019	396
61AF 022-105	406
61WG 020-090	514
NEW 61XW-ZE	574
80	
80HMA Comfort module	386
Control Solutions	
Carrier Energy Management solutions	848
NEW Carrier Thermal Energy Storage system	850
Fan coil controls overview	852
Thermostats	854
NTC controllers	856
NEW WTC controllers	860
Aquasmart Evolution	864

CARRIER

Since Willis Carrier developed the world's first modern air conditioning system in 1902, Carrier teams have been designing solutions tailored for each customer. Today, Carrier is the world's leader in high-technology heating, ventilation and air conditioning (HVAC) solutions. Carrier experts provide sustainable solutions, integrating energy-efficient products, building controls and energy services for all applications.

4

COOLING

Whether air conditioning is needed for a new building or a refurbishment project, for a commercial centre, an office application or an industrial process, Carrier offers a wide range of solutions: air cooled, water cooled and absorption units, with scroll, rotary, screw and centrifugal compressors from 8 to 10500 kW cooling capacity.

39

HEATING

Carrier offers a vast range of heating solutions from air-to-water heat pumps to water-to-water heat pumps, with heating only or reversible capability, with scroll and screw compressors from 5 to 1980 kW heating capacity. Carrier's heating machines are designed to deliver up to 85°C hot water temperature.

357

AIR TREATMENT

An important aspect of any HVAC system is the correct supply of treated fresh air to the building occupants, improving indoor air quality (IAQ) levels. Carrier offers a vast range of close control units and packaged units, as well as standard and customised air handling solutions to ensure the best match to the requirements. Carrier also proposes a range of hybrid terminal, cassette, cabinet, concealed, ducted terminals to match any application requirements and installation criteria: in the room, in the ceiling, above a false ceiling, in a central plant room, and many more.

577

CONTROLS

Carrier equipment and system controls are available for standard system applications and customised, tailor made projects. Carrier offers a wide range of control solutions covering all HVAC applications.

847

Your direct line to Carrier

EUROPE, MIDDLE EAST AND AFRICA

Carrier HVAC Europe Headquarter
Factory, Research and
Design Centre
Route de Thil
01120 Montluel - France
☎ +33 472 25 21 21

Australia
AHI Carrier (Australia) Pty Ltd
46-48 Derby Street
Silverwater NSW 2128
Sydney
☎ +61 02 9202 4400

Austria
AHI Carrier GmbH
Andromeda Tower
Donau-City - StraBe 6/9
1220 Vienna
☎ +43 12 699 69710

Azerbaijan
AHI Carrier MMC
44,C.Cabbarli street
Caspian Plaza, Baku
AZ1065
☎ +994 12 492 32 93

Belgium
Carrier Air Conditioning Benelux SA
Alfons Gossetlaan 28a
1702 Brussels
☎ +32 02 523 01 70

Bulgaria
AHI Carrier Bulgaria
25, Petar Dertliev Blvd
1324 - Sofia
☎ +359 29 48 39 60

Central & East Africa
AHI Carrier Fzc
B1-B22 , SAIF Zone
P.O. Box 122341
Sharjah
☎ +97165 045 700

Czech Republic
AHI Carrier CZ s.r.o.
Stýblova 253/13
14900 Praha 4 - Chodov
☎ +420 602 108 962

Egypt
Carrier Africa FZE
Lob 4 102 Jebel Ali Free zone
P.O. Box 18162, Dubai , UAE
☎ +971 4 88 11273

Miraco Egypt
Km 28 Cairo – Alexandria . Desert
Road Abou Rawash , Industriel Zone
Giza
☎ +20 2353 66 280

Finland
Carrier Oy
Vetokuja4
01610 Vantaa
☎ +358 9 613 131

France
Carrier France
Route de Thil
01120 Montluel
☎ +33 472 25 21 21
☎ +33 810 696 696

Germany
Carrier Klimatechnik GmbH
Edisonstrasse 2
D-85716 Unterschleissheim
☎ +49 89 32 15 40

Greece
AHI Carrier South Eastern
Europe S.A. Headquarters
18, Kifissou Avenue
104 42 Athens
☎ +30 210 6796 300

Italy
Carrier Distribution Italy Srl
Via Sempione, 247 C e D
20016 - Pero (MI) - Italy
☎ +39 02 86 80 71

Jordan
NTC Carrier
Al Rabieh, Al Sharif Nasser Bin Jamil
St. Hamadani 2 complex, building 37,
2nd Floor.
P.O.Box: 9268, Amman 11191 Jordan
☎ +962 655 638 90

Kazakhstan
AHI Carrier LLC
4th floor, 69 Tole bi str.
050000 Almaty
☎ +7 727 272 7100

Kuwait
Carrier Kuwait Air Conditioning K.S.C
Shuwaikh Industrial Area
Block 1, Street 11, Building 62
P.O.Box. 21326, Safat 13063
☎ +965 24819733

Lebanon
NTC Carrier
Mar Mikhael, Nahr Street, Tyan Bldg
3rd Floor P.O. Box 11-8680
1107 2270 Riad El Solh Beirut
☎ +961 1 575 555

Netherlands
Carrier Air Conditioning Benelux BV
PO Box 151
Rijndijk 141
2394 ZH Hazerswoude Rijndijk
☎ +31 71 341 7111

New Zealand
AHI Carrier (NZ) Ltd
207-211 Station Road
Penrose, Auckland 1061
☎ +649 355 6720

Poland
Carrier Polska sp z.o.o.
Ul.Konstruktorska 13
02-673 Warszawa
☎ +48 22 336 08 00

Portugal
Carrier Portugal
Estrada de Mem Martins, 7
2725-109 Mem Martins
☎ +351 424 99 00

Qatar
United Technologies Building &
Industrial Systems W.L.L
Jaidah Square, Building No.63-Zone 27
Airport road-street No. 310
Doha-Qatar
☎ +974 4431 0555

Republic of South Africa
AHI Carrier South Africa (Pty) Ltd
P.O. Box 39152
Booysens 2016
☎ +27 11 878 6000

Romania
AHI Carrier Romania
270d Turnu Magurele str Sector 4
Cavar Centre
Bucharest
☎ : +40 2140 50751

Russia Federation
AHI Carrier LLC
Entrance 7, Floor 2
7 Kievskaya Street
Moscow, 121059
☎ +7 495 937 4241

Saudi Arabia
Arabian Air Conditioning Company
P.O.Box 11728, Jeddah 21463
Saudi Arabia
Riyadh : ☎ +966 11 218 0755
Jeddah : ☎ +966 920 009 443
Dammam : ☎ +966 13 857 7710

Spain
Carrier España S.L
Avenida Real de Pinto. 91
Edificio C. Esc.2
28021 Madrid
☎ +34 91 520 93 00

Sweden
Carrier AB
PO Box 8946
Aröds Industriväg 32
40273 Göteborg
☎ +46 31 65 55 00

Turkey
Alarko Carrier San Ve Tic A.S.
Gebze Organize Sanayi Bolgesi
Sahabettin Bilgisu Cad.
41480 Gebze-Kocaeli
☎ +90 262 648 60 00

Ukraine
AHI Carrier LLC
9 Moskovskiy prospekt,
korpus 3, office-3-403
Kiev-04073
☎ +380 44 5022116

United Arab Emirates
AHI Carrier Fzc
B1-B22, SAIF Zone
P.O. Box 122341
Sharjah
☎ +971 6 5045700

UTS Carrier LLC
PO Box 6735
Palladium Bldg. Office 204
Bldg. 731, 4th Interchange
Sheikh Zayed Road
Dubai UAE
☎ +971 4 4199100

United Kingdom
Toshiba Carrier UK Ltd
United Technologies House
Guildford Road
Leatherhead
Surrey KT22 9UT
☎ +44 1372 220 220

CARRIER WORLD HEADQUARTERS
Carrier Corporation
One Carrier Place
Farmington
Connecticut 06034-4015
United States of America
☎ +1 800 674 3000

ASIA AND PACIFIC OPERATIONS
Carrier Singapore (Pte) Limited
28 Teban Gardens Crescent
Singapore 608926
☎ +65 675522

LATIN AMERICAN OPERATIONS
Carrier InterAmerica Corporation
10801 NW 103rd st.Suite1
Miami Fl 33178
United States of America
☎ +305 805 4500

NORTH AMERICAN OPERATIONS
Carrier Corporation
Carrier Parkway
Syracuse NY 13221
United States of America
☎ +1 800 227 7437

CARRIER MARINE & OFFSHORE
Europe, Middle East and Africa
P.O. Box 10066, Pittsburghstraat 21
3047 BL
Rotterdam
☎ +31 10 238 0181

Americas
P.O. Box 4805
Carrier Parkway, TR-20
Syracuse, NY 13221-4805
United States of America
☎ +1 704 875 7016

United Technologies

Carrier is part of UTC Climate, Controls & Security, a unit of United Technologies Corporation (UTC), a leading provider to the aerospace and building systems industries worldwide. UTC ranks among the world's most respected and innovative companies. To maintain this market leadership, the company continues to make substantial investments in the development of game-changing technologies and operate a central research organisation to leverage technological breakthroughs across the company.

UTC key figures

197,200 employees

$56.5B net sales

$6.3B net income attributable to common shareholders

$3.9B total R&D investment

www.utc.com

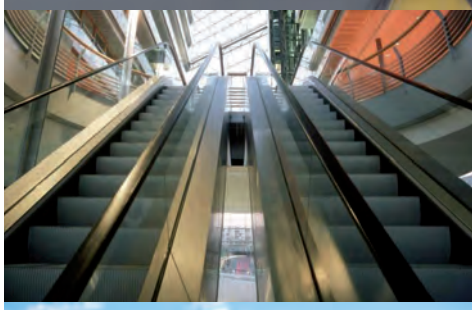

Net Sales By Type as a Percent of Total Net Sales (As of December 31, 2015)

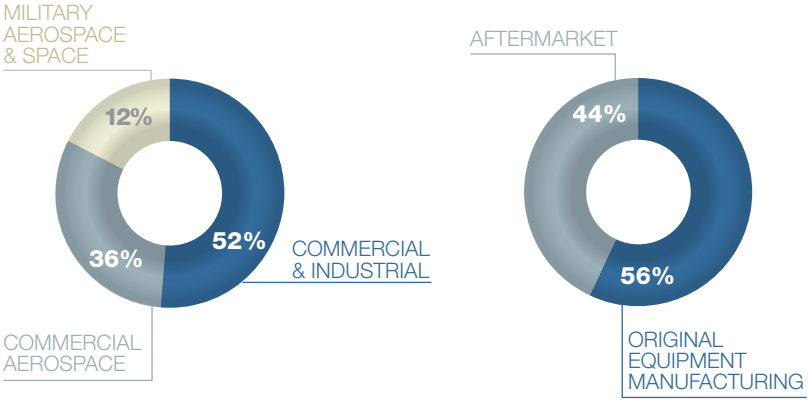

Net Sales By Geography as a Percent of Total Net Sales (As of December 31, 2015)

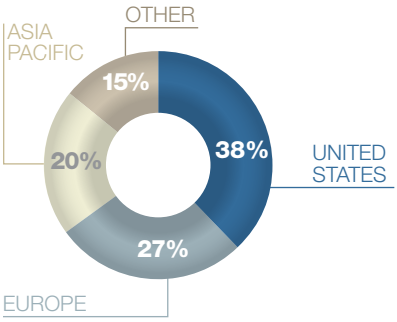

UTC global businesses power the aerospace and building systems industries.

United Technologies Climate | Controls | Security

OTIS United Technologies

UTC Aerospace Systems

Pratt & Whitney A United Technologies Company

UTC Climate, Controls & Security

UTC CCS key figures

50,000 employees
$17B net sales
51 factories
180 countries
39 R&D centres
www.ccs.utc.com

UTC Climate, Controls & Security, unit of UTC, is the world's largest provider of building technologies. Its fire safety, security, building automation, heating, ventilation, air conditioning and refrigeration systems and services promote integrated, high performance buildings that are safer, smarter and sustainable. The company's industry-leading brands include Carrier, Lenel, Edwards, Automated Logic, Kidde, Chubb and Marioff.

A legacy of innovation

At UTC Climate, Controls & Security, we have a proud history of pioneering innovation. The legacies of our founders have transformed industries and shaped our great companies into what they are today.

Chubb

Charles and Jeremiah Chubb patented the **first detector lock** in 1818.

EDWARDS

Robert Edwards patented **first electric alarm bell** in 1881.

Carrier

Willis Carrier developed and later patented the **first modern air conditioning system** in 1902.

Kidde

Walter Kidde Company was founded in 1917 and later produced the **first integrated smoke detection and carbon dioxide extinguishing system** for use on board ships.

UTC Climate, Controls & Security continues to uphold this tradition and has a large portfolio of industry-leading solutions.

AutomatedLogic · AUTRONICA · Carrier TRANSICOLD · Delta Security Solutions · DET-TRONICS · fireye · GST · interlogix · LENEL · MARIOFF · NORESCO · Onity · SENSITECH · sicli · Supra · TAYLOR · UTEC

Carrier's heritage: the invention that changed the world

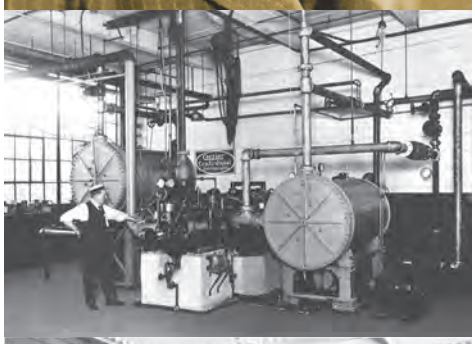

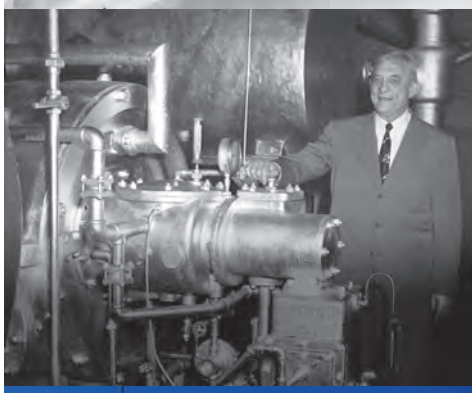

On July 17, 1902, Willis Haviland Carrier designs the world's first air conditioning system. The invention is originally devised to solve a problem for a customer at a printing plant in New York City. Willis H. Carrier's invention is a true breakthrough, so innovative that it has gone on to launch a company and create an entire industry essential to global productivity and personal comfort.

1911
Willis Carrier writes a "Rational Psychometric Formulae" for the calculation of the wet temperature that quickly becomes the predecessor of the charts used today. He becomes internationally recognised.

1915
Carrier Engineering Corporation is incorporated with Willis Carrier as president with the intention, despite an economic slump and world war, of building a brand-new industry.

1926
Carrier introduces the first home air conditioner.

1949
Carrier announces that New York City's four biggest and most modern postwar skyscrapers would soon be air conditioned by Carrier's Conduit Weathermaster system.

1979
The acquisition of Carrier by United Technologies reshapes the global market for heating, ventilation and air conditioning.

1998
Willis Carrier is named one of Time magazine's "100 Most Influential People of the Century", 48 years after his death.

Legacy of innovation

Over time, Carrier has been recognised as the **world's leader** in high-technology heating, air conditioning and refrigeration solutions. The company continues to innovate in order to offer market-leading products and solutions.

Discover Carrier corporate video on
www.youtube.com/c/utcclimatecontrolssecurity

Carrier leading innovation

AdvanTE³C
United Technologies
Building Experts in Efficiency and Environment

AdvanTE³C is a global group of Experts in Efficiency and Environment focused on developing innovative and sustainable building solutions.

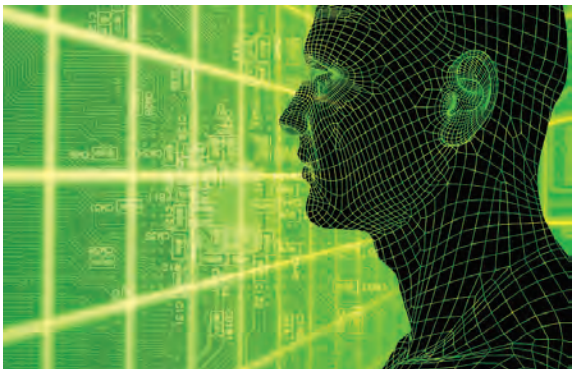

The AdvanTE³C approach helps customers around the world to develop strategic, energy-efficient and custom-engineered building solutions, which go beyond standard solutions.
The AdvanTE³C group has access to highly qualified engineers with substantial experience in thermodynamics and efficient building design. This group of experts also has in-depth knowledge of HVAC, fire & security and building automation solution fundamentals, in addition to industry-leading modelling tools and unique research facilities. Carrier's AdvanTE³C engineers design the HVAC systems that meet the energy performance and comfort standards of tomorrow, today.
They offer customers a new approach to HVAC system design. By working directly with customers to understand their specific business and application needs, they are able to develop custom-engineered solutions that address the specific challenges facing each customer and that may therefore have worldwide benefits for many others.

Innovative projects through Europe

MuCEM, Marseille, France
June 2013
Seawater application

Carrier's expertise in seawater heating and cooling systems helped the national Museum of European and Mediterranean Civilisations (MuCEM) to meet its environmental goals for an energy efficient and sustainable solution.

© Bahnhof - www.bahnhof.net

Bahnhof, Stockholm, Sweden
January 2014
District heating, heat recovery application in three data centres

Carrier AdvanTE³C engineers, working closely with the Swedish Internet service provider Bahnhof and hydronic specialists have helped to optimise an innovative cooling & heating solution turning data centres into heat sources for local district heating systems.

© Musei Vaticani, all rights reserved.

Sistine Chapel, Vatican City State
October 2014
Cultural heritage preservation

By harnessing the power of today's technology, international teams from UTC and Carrier developed a unique heating, ventilating and air conditioning solution to ensure the preservation of this World Heritage treasure for generations to come.

CADZIPLO, Geneva, Switzerland,
August 2015
Europe's first screw water-to-water heat pumps using HFO

Carrier has set a new milestone with Europe's first district heating project based on screw water-to-water heat pumps using low Global Warming Potential PUREtec™ refrigerant: HFO R1234ze(E)

Discover the story of CADZIPLO project on www.youtube.com/c/utcclimatecontrolssecurity

Office

KEY ADVANTAGES

Green Building approach

Carrier solutions not only offer efficiency to reduce the overall building energy consumption but are also designed for easy system integration: variable-speed pumps for efficient operation, time-scheduling, double-set point; night-mode operation to optimise the chiller operation according to the requirements of the building; several communication protocols and remote monitoring to secure consistent efficiency through the entire lifetime of the equipment.

Partial free cooling

For applications with moderate cooling demand throughout the entire year including the cold season, units can be equipped with a patented Carrier DX free cooling system with a dedicated pump by-passing the compressor on one or both refrigerant circuits during winter operation. Operation without glycol, no extra free cooling coil. This results in significant energy savings.

Hybrid terminal

The 36XB Hybrid terminal combines the advantages of both chilled beams and fan coils: energy efficiency, high levels of comfort, extremely low noise and high indoor air quality. The primary ventilation air volume can be controlled based on CO_2 levels in rooms to maximise comfort and minimise system energy consumption.

Comfort management

From open space to individual office, comfort can be personalized and controlled according to occupancy. The Aquasmart® system manages building zoning, occupancy and room temperature in accordance with needs.

The system offers a remote access (WebCTRL®) and records historical data of the HVAC equipment.

European directives and legislation increasingly target reducing the energy use of all buildings and the office space represents an important opportunity. A number of Green Building Certification programs including BREEAM, LEED, PEARL and local national regulations focus on ensuring that efficient HVAC systems contribute to these goals when selected, not only for new but also for refurbishment projects.

Carrier products and systems can contribute to reducing the overall building energy consumption and are also designed for cost effective installation.

Commercial centre

KEY ADVANTAGES

For small/medium individual needs

Cost-effective self-contained air conditioning solutions for retail applications and/or warehouses are rooftop units. Designed for outside installation, these systems provide an easy, versatile solution for both new and retrofitted buildings. A range of types and options provide cooling, heating and ventilation and allow a variety of system designs from constant volume to variable volume designs.

For larger centres

Centralised chiller systems and air handling units distribute chilled water and treated ventilation air to the shopping complex. Individual shops select the most appropriate chilled water terminals or packaged air treatment solutions for their comfort needs and to suit interior design.

Heat recovery

Carrier offers a range of heat recovery options, including high efficiency heat recovery solutions on rooftop and air handling units. These can contribute to reduced heating energy usage or in some cases replace components that use alternative fuels.

Indoor air quality

Carrier solutions can help to ensure and maintain a highly controlled microclimate, regulating the temperature and humidity levels, as well as ensuring optimal indoor air quality (filtration efficiency levels, CO_2 levels management).

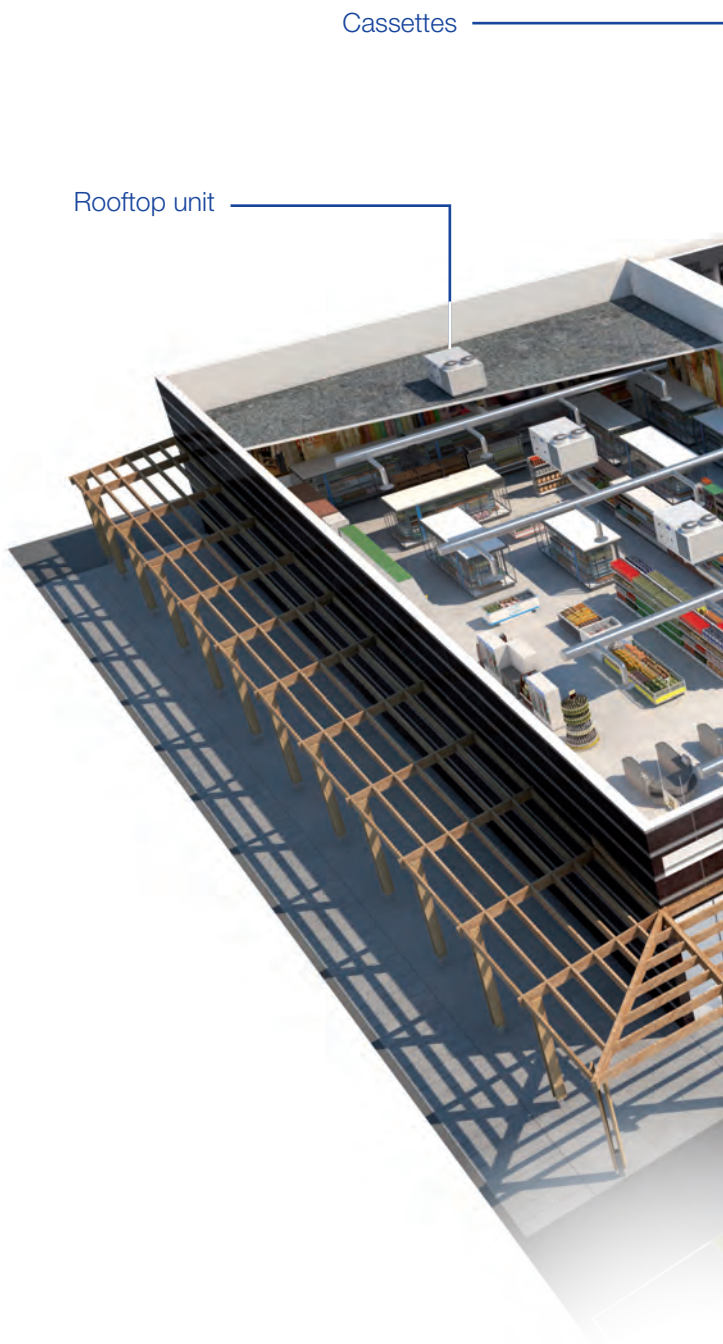

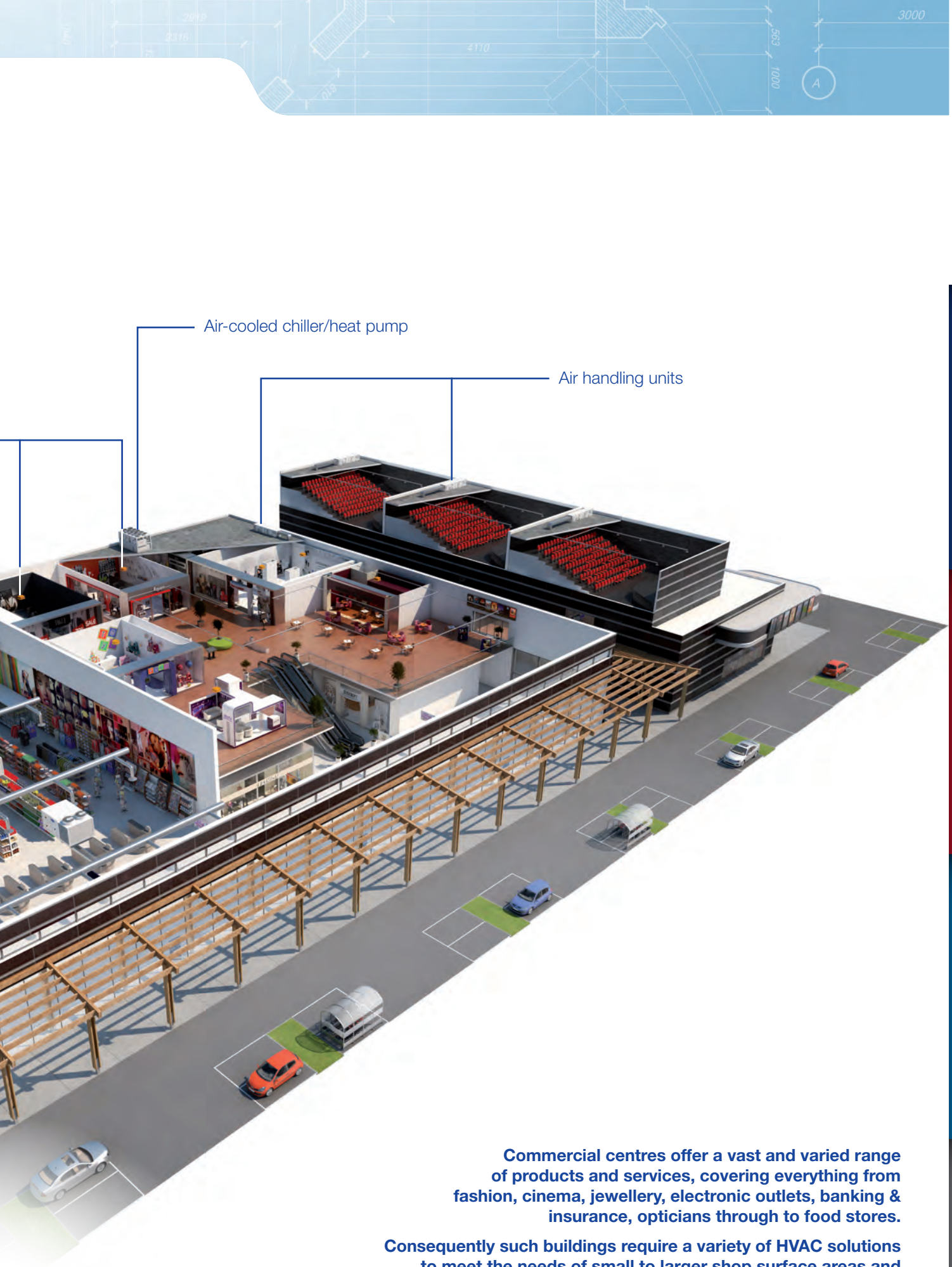

Commercial centres offer a vast and varied range of products and services, covering everything from fashion, cinema, jewellery, electronic outlets, banking & insurance, opticians through to food stores.

Consequently such buildings require a variety of HVAC solutions to meet the needs of small to larger shop surface areas and configurations. Whether the need is for centralised or decentralised solutions, Carrier offers a wide range of energy efficient products and solutions to meet designers' and installers' needs.

Cultural heritage

KEY ADVANTAGES

Low noise emission

Carrier units have dedicated low noise options to be virtually unnoticeable and to respect the need for “church-quiet” noise levels.

Precise adaptability to load variation

Conditions inside buildings change as a result of many factors including the local climate, the time of the day and the number of visitors. Carrier solutions equipped with precise electronic capacity controls and variable-speed motors adapt to meet load variations in just a few seconds, assuring exceptional comfort and in turn ensuring minimum energy consumption.

Indoor air quality

Carrier solutions can help to ensure and maintain a highly controlled microclimate necessary to protect the works of art, regulating the temperature and humidity levels, as well as ensuring optimal airflow quality and velocity.

Smart Energy Management

Night-mode operation, time-scheduling and precise room temperature control are key features for any cooling or heating device operating in a museum. Thanks to advanced control systems such as Aquasmart® and Carrier® PlantCTRL™, the HVAC system can be controlled and optimised as a whole for maximum comfort and minimised energy consumption.

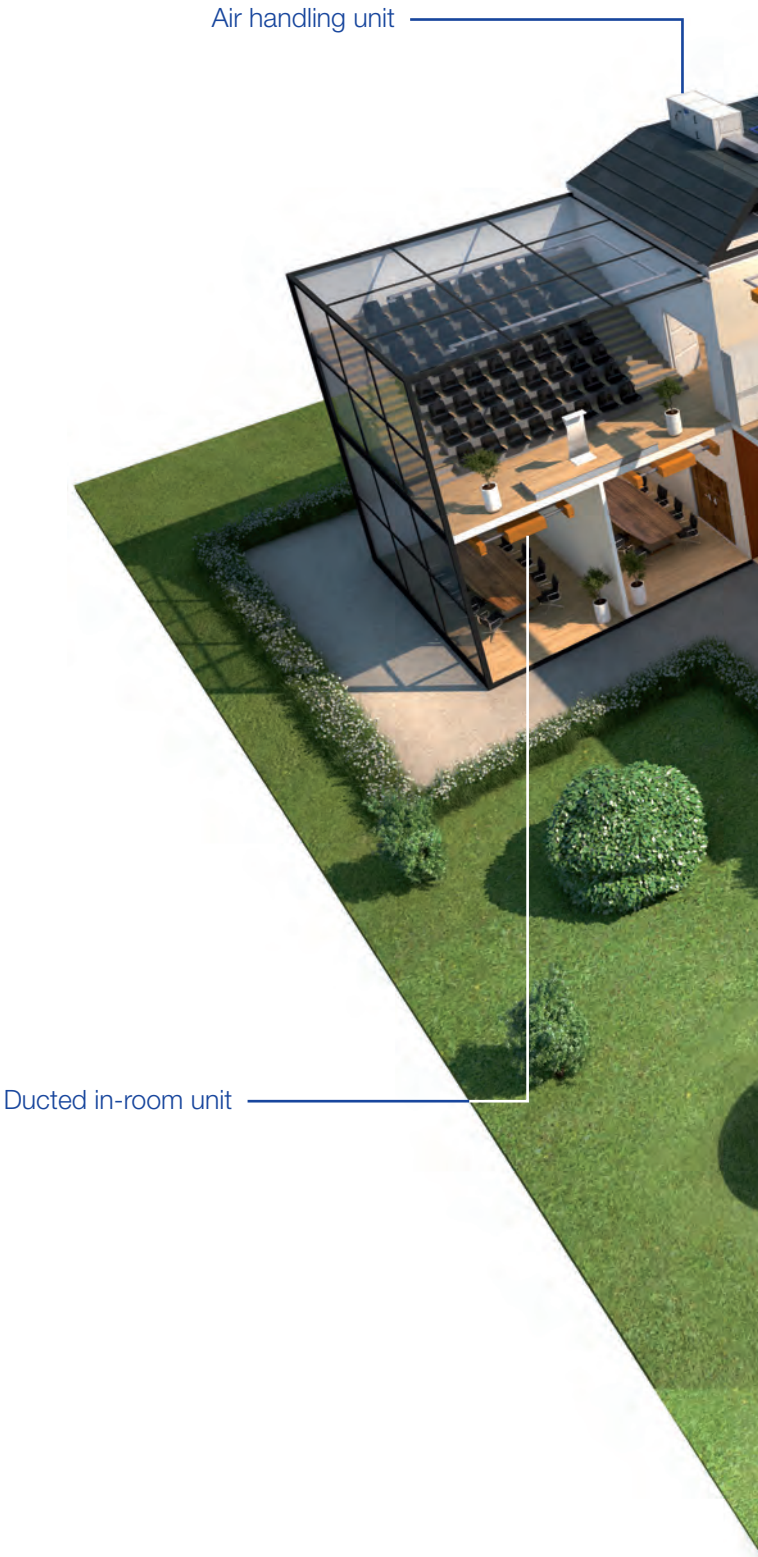

Culture and art lovers travel to prestigious monuments, historical buildings or art galleries to view masterpieces of art or enjoy an opera or a play. Owners and operators of these establishments are looking to not only protect the heritage and pieces on display but also to ensure that the visitors are able to appreciate and enjoy them in the best possible conditions of comfort, both thermal and acoustical, whether within the art galleries, shops, or restaurant facilities.

Carrier solutions are designed to provide these conditions whilst remaining discreet and unnoticeable.

Data centre

KEY ADVANTAGES

Fast capacity recovery

Maximum uptime is a priority for data centre applications. To meet this challenge, the IT cooling system must be reliable and able to respond to unexpected variations. Carrier developed its dedicated fast capacity recovery feature, offering significant reduction of recovery time in case of power failure.

Reliability

Products undergo extensive tests before they are shipped to the customer and are also certified by internal organisations to ensure the highest levels of safety and quality.

Total free cooling

Air-or water-based free cooling systems are popular for data centre applications where the climate is suitable, resulting in energy savings through reduced use of the number of compressor running hours during the cold season. Carrier offers airside free cooling options on air handling units and hydronic free cooling options for chiller systems, either with Carrier patented DX free cooling integrated system or using non-integrated systems using dry coolers or towers.

Smart Energy Management

Advanced control solutions such as Carrier® PlantCTRL™ allow to control the HVAC system and to optimize it as a whole for maximum availability and minimized energy consumption.

The main purpose of data centres is to accommodate computer servers and data storage to store and share information via local or wide area networks to private or public companies and audiences. The IT equipment and related infrastructure (telecommunications, power and various security devices) give off heat requiring cooling systems. Other HVAC needs within such facilities are mainly related to human comfort for the facilities management and maintenance personnel.

Carrier has a range of solutions covering liquid chillers, rack cooling, and air treatment solutions that deliver energy efficient cooling to ensure maximum uptime supported by an extensive service offer.

Hospital

KEY ADVANTAGES

Air quality

Carrier solutions can help to ensure and maintain a highly controlled microclimate, regulating the temperature and humidity levels, as well as ensuring optimal indoor air quality (filtration efficiency levels, management of CO_2 levels).

Free cooling

For healthcare applications with 24/7 operations, a cooling demand may exist throughout the entire year. Units equipped with a patented Carrier DX free cooling can offer significant energy savings without need for the use of glycol or extra free cooling coils and controls.

Heat recovery

Carrier offers a range of heat recovery options, including high efficiency heat recovery on air handling units and desuperheaters or heat recovery condensers on chiller systems to contribute to reduced heating energy usage.

System control

Hospitals often have dedicated control rooms to monitor the proper operation of all equipment in the entire building. Thanks to the availability of open protocol communication interfaces, Carrier equipment can be easily integrated in the building management system on site and, thanks to Carrier® PlantCTRL™, owners and plant managers may benefit from optimised control of the HVAC system plant room to reduce energy consumption and ensure continued delivery of comfort and air quality.

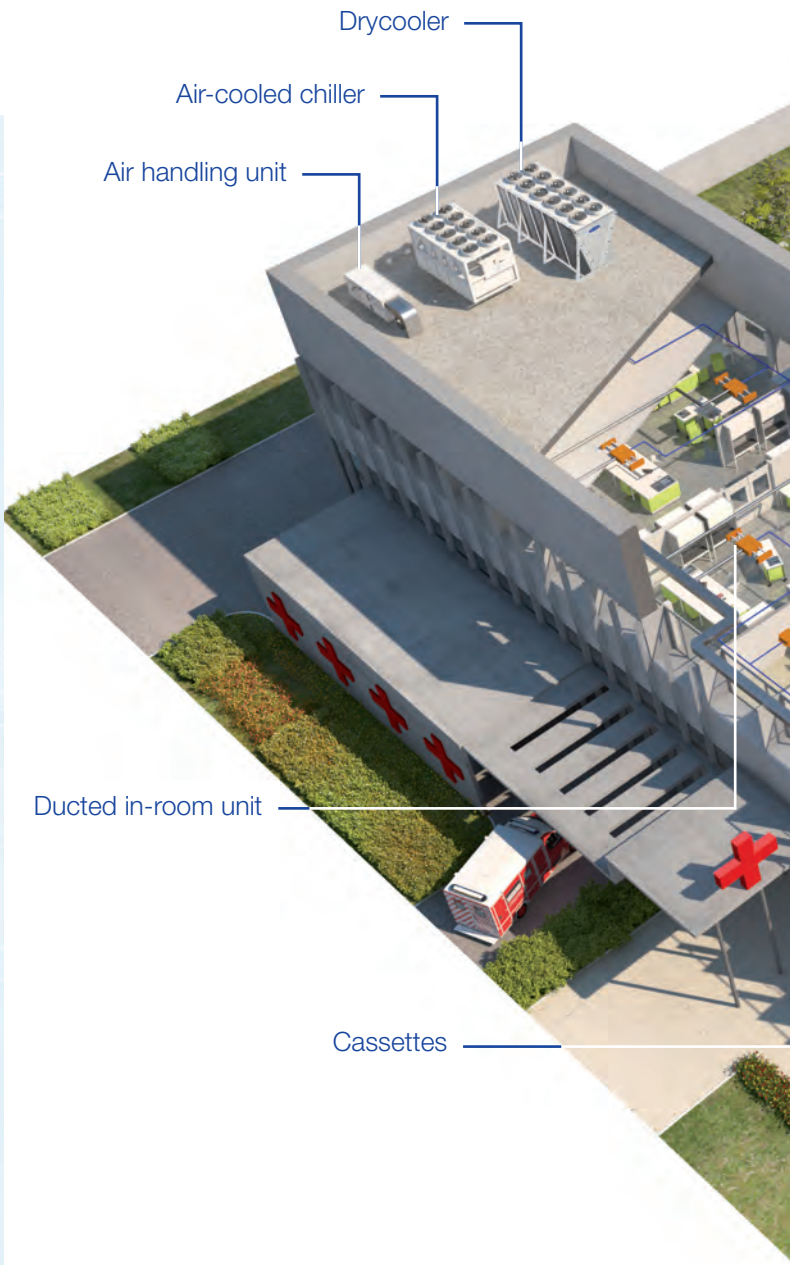

Hospital and healthcare facilities represent a variety of HVAC challenges covering a range of needs from comfort cooling and heating to the specific and highly demanding challenges of test and research laboratories. Maintaining a comfortable and hygienic experience is extremely important.

Hospital owners and facility management teams will find peace of mind, efficiency, reliability and comfort in Carrier capabilities to meet and accompany them in their needs.

Hotel

KEY ADVANTAGES

Low noise features (night mode)

Air conditioning, ventilation and heating (depending on the region and season) are among the first things guests experience and they accompany them during their stay at a hotel. Carrier terminal solutions and diffusion capabilities offer the low noise performance that guests require in a relaxing environment.

Advanced temperature controls

Personalising a guest's stay is vital to building a relationship that will keep them coming back. Carrier's easy-to-use, aesthetically pleasing user interfaces supported by energy management systems, from Aquasmart® to WebCTRL®, make providing individualised climate settings cost effective and intuitive. User interfaces are available in a wide variety of options in Carrier's range.

Large range of heat pumps (5-5000 kW)

Carrier has introduced dedicated heat pumps designed for heating applications. They deliver superior energy efficiency both during cooling and heating operation whatever the external weather conditions: from -20 to 46°C outdoor air temperature.

Heat recovery

Carrier offers a range of heat recovery options, including high efficiency heat recovery on air handling units and desuperheaters or heat recovery condensers on chiller systems to contribute to reduced heating energy usage.

Sanitary hot water

Hotels require a constant suply of sanitary hot water for various areas. Heat recovery at very high temperature is possible for many Carrier chillers offering energy to pre-heat the hot storage tank normally heated by traditional boilers. Furthermore dedicated high temperature heat pumps capable of hot water production up to 68°C offer further opportunities to reduce energy consumption of the system.

Today's hospitality and hotel business needs to offer different levels and types of products and services to meet various guest profiles, from business users to tourists and holiday makers. Accordingly the HVAC solutions need to adapt and address different areas and usages from reception and conference facilities, through dining and entertainment to relaxation (spa, hammam, sauna, swimming pool, and fitness areas) and a wide range of bedroom types.

Hotel owners, developers and facility/property management companies will find profitability, reliability and guest satisfaction in Carrier capabilities to meet their needs.

Industry

KEY ADVANTAGES

Chilled water production down to -12°C

Low temperature chilled water production down to -6°C (medium) or to -12°C (low) covers specific applications such as ice storage and industrial process cooling.

High efficiency at full and partial load

An inverter-driven machine usually offers very high efficiency at partial load, but achieving high efficiency at partial load often meant sacrificing efficiency at full load. Thanks to AquaForce® with Greenspeed® intelligence, you can have both.

Proximity and proactivity to ensure no downtime

An advanced monitoring service offering continuously collects information from equipment to anticipate and prevent loss of performances or any damage.
This solution enables users to track and monitor their HVAC system performance and to take preventive and corrective actions remotely, optimizing the lifetime of the equipment.

Smart Energy Management

Advanced control solutions such as Carrier® PlantCTRL™ allow to control the HVAC system and to optimize it as a whole for maximum availability and minimized energy consumption.

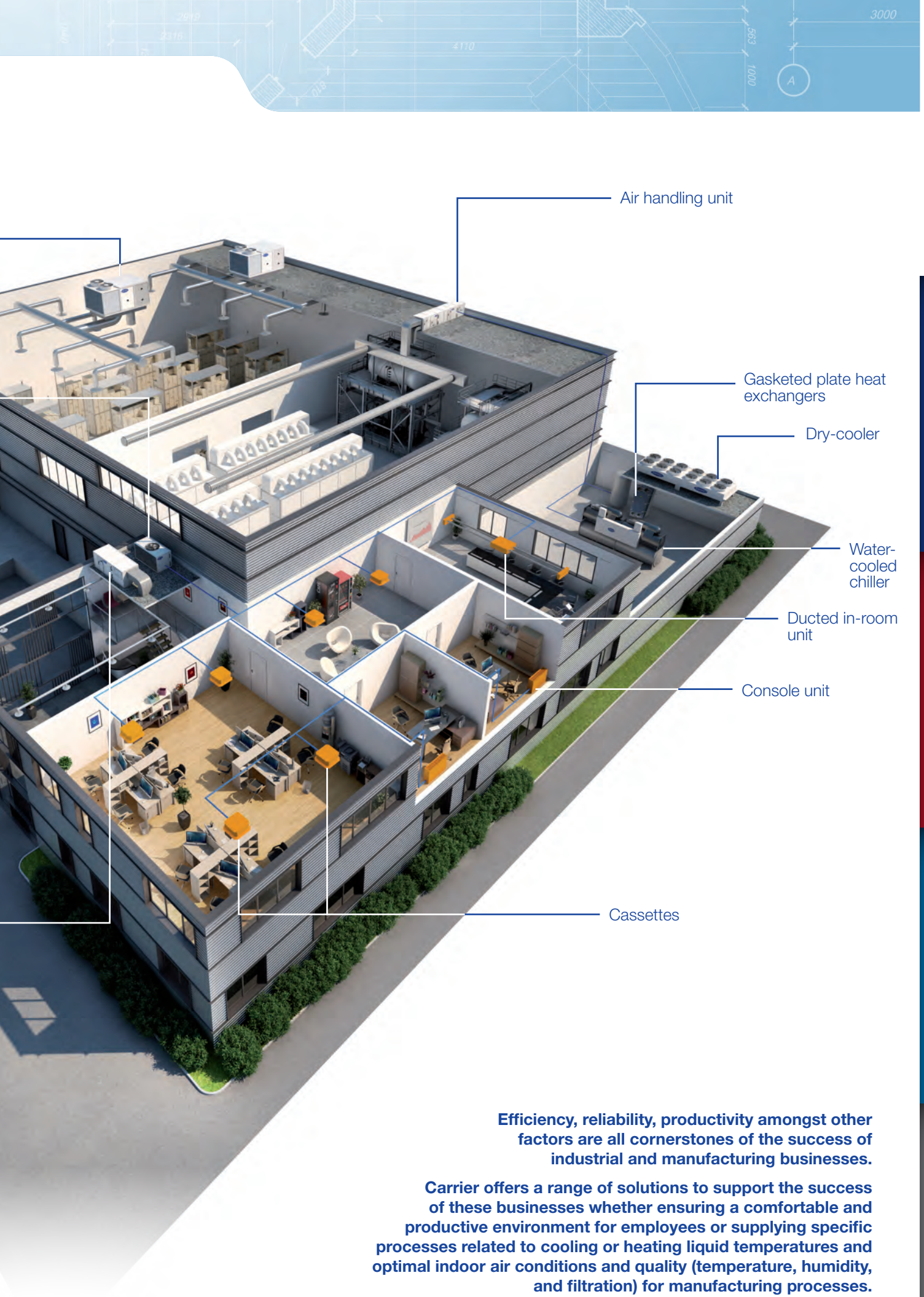

Efficiency, reliability, productivity amongst other factors are all cornerstones of the success of industrial and manufacturing businesses.

Carrier offers a range of solutions to support the success of these businesses whether ensuring a comfortable and productive environment for employees or supplying specific processes related to cooling or heating liquid temperatures and optimal indoor air conditions and quality (temperature, humidity, and filtration) for manufacturing processes.

Marine

SPECIFIC SOLUTIONS

Machinery space

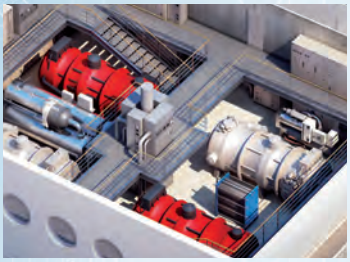

- AquaEdge™ two-stage chillers
- AquaForce® 30XWHV water-to-water heat pump
- PlantCTRL™ system manager
- 10TE gasketed plate heat exchangers

Passenger cabin

- 42MS passenger cabin fan coil
- WTC controller
- Room controller
- CO_2 sensor with active ventilation
- Lights and blinds module

Public areas

- 39CQ compact air handling unit
- 39HQ AiroVision air handling unit

Control room:
WebCTRL® shipboard automation system
Carrier remote monitoring

Public areas:
39CQ compact air handling unit
39HQ AiroVision air handling unit

Passenger cabin:
42MS passenger cabin fan coil
WTC controller
Room controller
CO2 sensor with active ventilation
Lights and blinds module

Machinery space:
AquaEdge™ two-stage chillers
AquaForce® 30XWHV water-to-water heat pump
PlantCTRL™ system manager
10TE gasketed plate heat exchangers

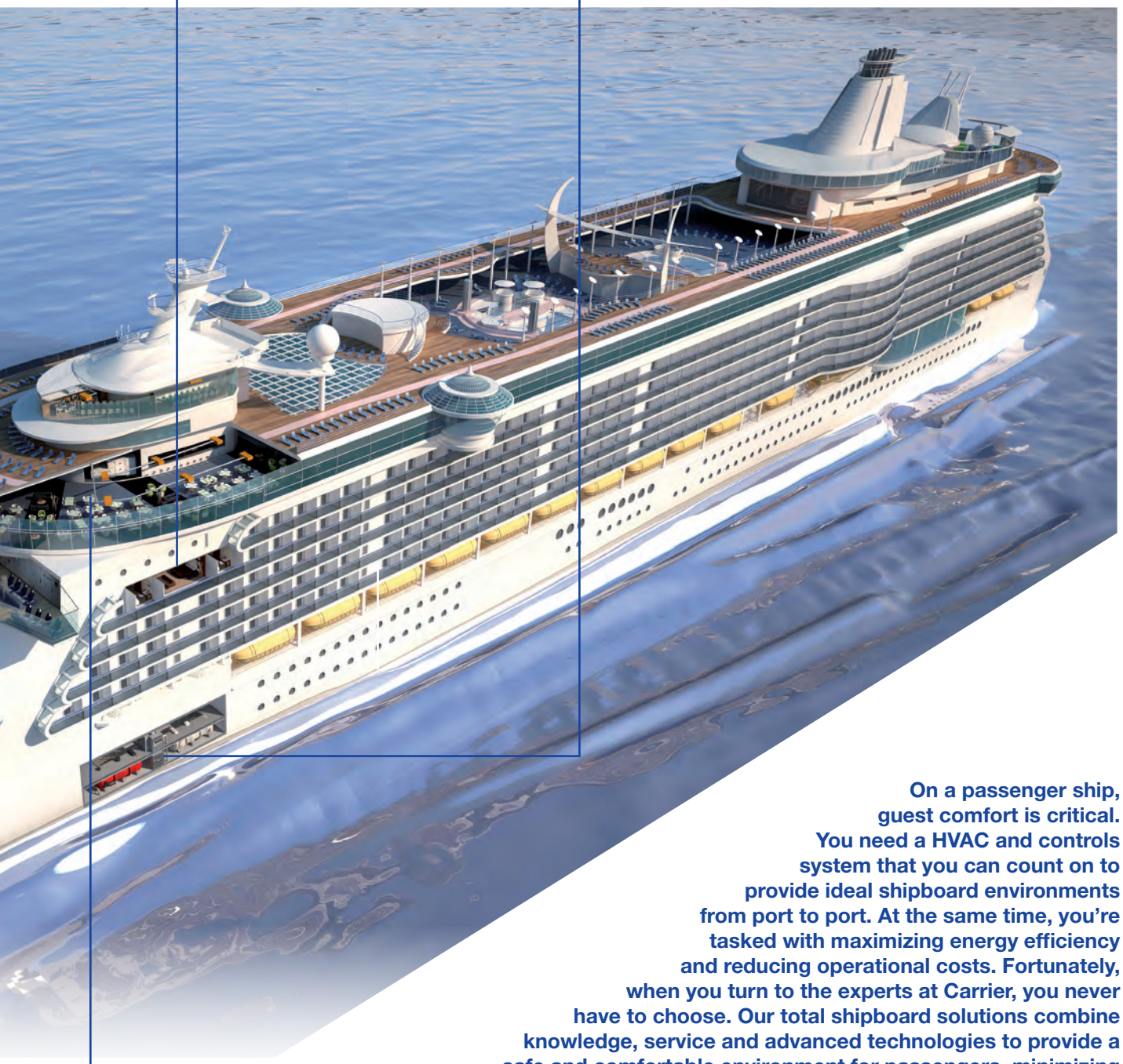

On a passenger ship, guest comfort is critical. You need a HVAC and controls system that you can count on to provide ideal shipboard environments from port to port. At the same time, you're tasked with maximizing energy efficiency and reducing operational costs. Fortunately, when you turn to the experts at Carrier, you never have to choose. Our total shipboard solutions combine knowledge, service and advanced technologies to provide a safe and comfortable environment for passengers, minimizing downtime while maximizing savings.

Carrier Marine & Offshore solutions are designed to maximize your passengers' comfort while helping you run a tight ship with minimal effort. With fully communicating controls, it is easy to monitor and collect data to optimize comfort, keep track of costs, and stay on top of maintenance needs.

World-class operations to bring best-in-class solutions

The HVAC EUROPE research and design centre, factories and laboratory facilities design, manufacture and test equipment for customers throughout the world.

Located near Lyon, France, the Montluel laboratory is unique in Europe, both in terms of cooling capacity coverage, measurement accuracy and EN 14511 compliance.

Laboratory tests
- 16 individual test stations with 11 individual test rooms
- Ambient control from -20°C to 55°C
- Individual unit test capacity up to 3,000 kW

Quality and reliability to obtain stable conditions
Engineers carry out extensive tests on all products in real-life conditions. These tests comply with the European standard EN 14511 and AHRI551/591, which specify the testing methodology and procedures.
EN 14511 is also the testing standard used by the European HVAC industry association Eurovent for the certification of chiller performance.

EN 14511 sets challenging quality criteria that must be met in order to ensure that measurements taken during the test are accurate and reliable. There are strict limits on the variation of both actual and average temperatures during the data acquisition period. These limits also apply to water flow rates and to electrical data.

Cofrac certification for customer tests
The laboratory is accredited for ISO 17025 by the French Committee for Accreditation (Cofrac), an independent organisation that audits all activities related to customer tests, the laboratory's quality system and organisation. Carrier is certified to perform tests for customers, acting as a third-party laboratory.

The strength of a global group

Carrier leverages UTC's world-class research and development resources: **United Technologies Research Center** (UTRC). Since its founding in 1929, UTRC has been designing ideas for applications, culminating products, technologies and systems that impact the world. Its diverse staff includes some of the world's best scientific and engineering talents. UTRC focuses on leading-edge technologies that provide elegant solutions to some of the world's most complex challenges

Carrier and UTRC technology co-developing program:

TECHNOLOGY / PRODUCT DEVELOPMENT

UTRC

Advanced technologies
600 engineers
❖ Otis ❖ Pratt & whitney ❖ UTC Aerospace Systems ❖ UTC Climate, Controls & Security

CARRIER TECHNOLOGY

Applied technologies
300 engineers

CARRIER HVAC EUROPE Research & Design Centre

Product development
190 engineers
Largest laboratory in Europe for HVAC

7 Centres of Excellence in Europe

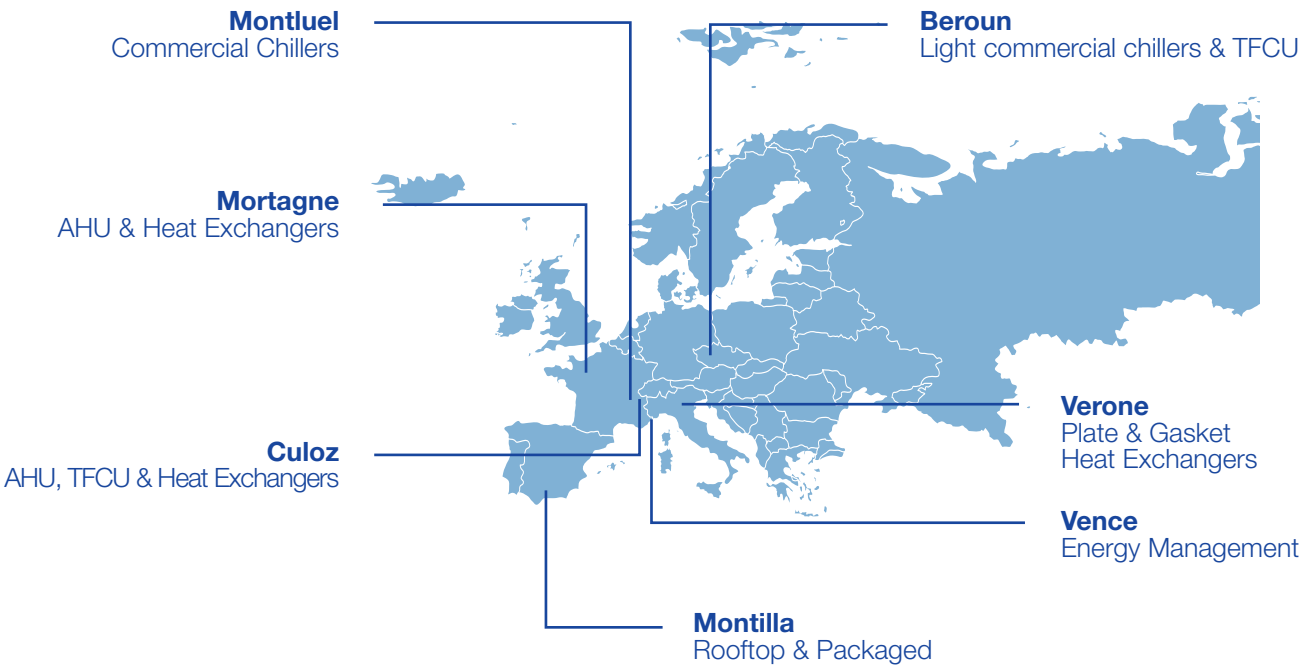

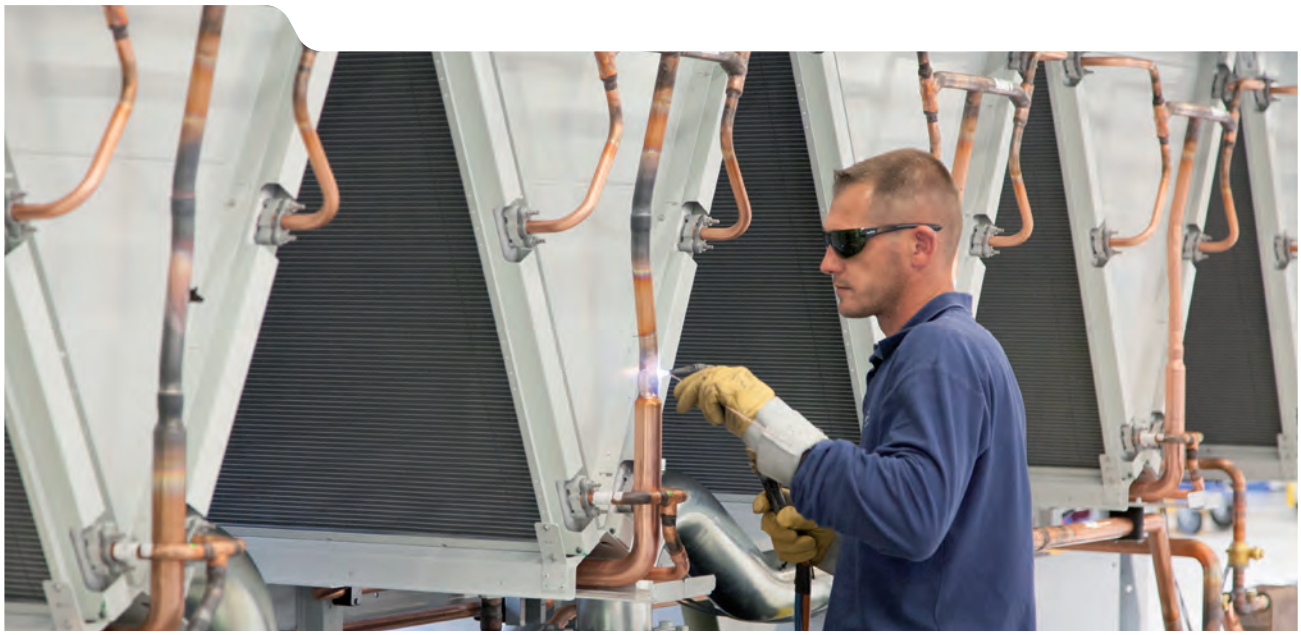

Natural leader in sustainability

At UTC Climate, Controls & Security, sustainability leadership is something that comes naturally. The company's founders were inventors, its brands pioneered industries and its products changed the world. And along the way, a focus on sustainability and preserving natural resources has endured as a guiding principle.

Natural leadership

Whether developing efficient, new products, building green factories or enhancing operations, UTC Climate, Controls & Security' brands have often been the first to reach new milestones in sustainability.

But leadership means more than being first. It means consistently getting better.

At UTC Climate, Controls & Security, our approach to sustainability is rooted in three beliefs.

GREEN Products
must start at a green company.

GREEN Dialogue
can rebalance the built environment with the natural environment.

GREEN Buildings
will accelerate with education.

So UTC Climate, Controls & Security innovates and sets more aggressive goals. It improves everything it does, every day. Leadership is about working together for something greater, that's why the company shares what it knows with the world through education, training, research and partnerships. From fuelling the green building movement globally to improving the cold chain and feeding a growing planet, UTC Climate, Controls & Security is making our world a better place to live today - and for generations to come.

2015 Environmental Performance Accomplishments

49% REDUCTION in Greenhouse Gas Emissions

54% REDUCTION in Worldwide Water Consumption

59% REDUCTION in total waste

78% REDUCTION in Air Emissions (non-greenhouse gases)

Our environmental reporting standards encourage the ongoing analysis and correction of data, as applicable, following the close of a reporting period. Previously reported annual environmental metric results may change between annual reporting periods, and we will include any prior year data revisions in current reporting.

2006 data adjusted for acquisitions and divestitures.

Carrier, committed to environmental responsibility

Carrier is committed to limiting the environmental impact of its products and solutions and reducing energy consumption. This commitment is in line with the targets of the European climate and energy package for 2030:

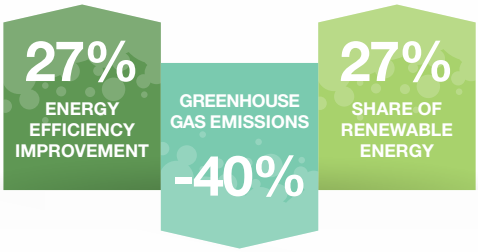

The refrigerant charge and energy consumption are the two main contributors to the carbon footprint of chillers and heat pumps, a fact recognized by Carrier in its research & development investments well before the topic hit the headlines.

High performance design

The impact of the machines on global warming is **mainly due to the primary energy used for their operation**. Carrier designs products that achieve optimized energy performance throughout the year and limit the indirect release of CO_2 associated with the consumption of electricity.
From the design stage, Carrier works on optimizing its manufacturing process to produce **highly reliable products.**
A limited number of welding joints **avoids possible leaks at the source**. All Carrier machines are tested in special booths to ensure they are leak-proof.

Minimized refrigerant charge

By 2006, Carrier became the first company to introduce the all-aluminium microchannel heat exchanger (MCHE) technology in the commercial air conditioning industry. Since 2011, a new generation of microchannel is available: **Novation® Microchannel.**

- **Up to 50% refrigerant charge reduction** vs. traditional Cu/Al (copper/aluminium) coils*
- Better thermal performance, better efficiency and lower air pressure drop vs. Cu/Al coils*

Carrier continues to work towards the reduction of refrigerant charge in its products and includes this as a key performance indicator for all new product developments.

Life cycle approach

Carrier products are extensively tested and maintained to a very high level, thanks to an extended service offering to ensure the best performance during the entire life cycle of the equipment.
An advanced monitoring solutions offering continuously collects information from equipments to **anticipate and prevent loss of performance or any damage**. This offer, available in three levels of service, enables users to track and monitor their HVAC system performance and to take preventive and corrective actions remotely, optimizing the lifetime of the equipment.

Follow us on Twitter @CarrierGreen

The Carrier CO_2NSERVATION Meter

This meter calculates avoided greenhouse gas (GHG) emissions as a result of the installation of high-efficiency Carrier air conditioning, heating and refrigeration systems by customers around the world since 2000.
As of March 31, 2016, the Carrier CO_2NSERVATION Meter reached more than 190 million metric tons of greenhouse gases saved, equivalent to:

Approximately 44,000,000 vehicles removed from the road for one year*

Saved the electricity consumed by **approximately 26,000,000 homes** during one year*

* According to the United States Environmental Protection Agency Green Power Equivalency Calculator - The model compares the projected GHG emissions from select Carrier products to emissions from comparable baseline products, with the difference representing the avoided emissions. The meter also incorporates energy savings as measured from energy service contracts. The model demonstrates the power of choosing high efficiency solutions.

Carrier, meeting the challenge of regulatory changes

The challenge raised by the European Union's F-gas Regulation means the entire industry must move to a new generation of refrigerants, that will not only protect the ozone layer but also have a very low global warming impact. Carrier is facing this challenge head on.

The European F-gas Regulation 2014

The 2014 revision of the regulation introduced bans for certain equipment using hydrofluorocarbon (HFC) chemicals and a phase down scheme for HFCs placed on the European market:

- **Equipment bans** target refrigeration applications and very low capacity air to air conditioners (residential). **There are no specific bans on liquid chillers and hot water heat pumps** using R-134a, R-407C and R-410A refrigerants.
- **The phase down** is a step-by-step approach to lower the CO_2 equivalent in the HFCs that are placed on the market are gradually reduced through the allocation of quotas by the European Commission to producers and importers of bulk HFCs and importers of HFCs contained in pre-charged equipment. As a result of the phase down, high Global Warming Power (GWP) HFC consumption will be drastically reduced in 2030.

European Union's targets HFC consumption related to CO_2 equivalent

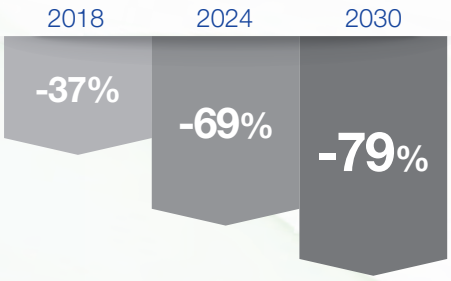

Carrier's solution: PUREtec™

Carrier has been working over the past years on selecting the right refrigerant for the future and has now taken the lead in introducing the next generation of refrigerants on screw compressor chillers and heat pumps : PUREtec . **With PUREtec, Carrier offers a range of new customized solutions using a refrigerant with zero impact on the ozone layer and nearly zero global warming potential: HFO R-1234ze.**

PUREtec extensive research program

1 Refrigerants assessment

Approximately **320 refrigerants** evaluated on:

- Ozone Depletion Potential (ODP)
- Global Warming Potential (GWP)
- Toxicity
- Flammability
- Performances
- Applied cost impact
- Technology impact

2 Detailed performance and cost analysis

Identification of **the best candidate** to replace HFC-R134a **for all screw units: HFO R-1234ze**:

- Limited impact on global warming GWP <1* (similar to natural substances: CO_2 GWP=1)
- Not affected by the F-gas 2014 phase down plan
- Highly efficient: supporting low primary energy consumption
- Extended operating envelope allowing new application opportunities

*Based on IPCC 5th assessment report (GWP 7 according of the 2010 assessment of the SAP of the Montreal protocol).

3 Key components testing and qualification

Association of components:

- New refrigerant and associated lubricant
- All chillers' subsystems components, including Carrier's proprietary technology: compressors and heat exchangers to ensure **proper and reliable operation**

4 System level testing and qualification

- **Extensive run tests** in Carrier's laboratory **for air and water-sourced screw units**
- Notified bodies involved in the unit quality certification
- Dedicated control algorithm to optimize machine operation

The new generation of AquaForce using PUREtec™ refrigerant

All the reliability, efficiency, adaptability of the AquaForce range...

AQUAFORCE PUREtec AQUAFORCE greenspeed PUREtec

Air-cooled screw compressor chillers

- 30 XA-ZE and 30XAV-ZE

Water-sourced screw compressor chillers and heat pumps

- 30XWP-ZE , 30XWV-ZE, 30XWHP/HV-ZE AND 61XWH-ZE

Discover PUREtec on
www.youtube.com/c/utcclimatecontrolssecurity

...combined with PUREtec refrigerant: HFO R-1234ze

	HFC R-134a	HFC/HFO Blend	HFO R-1234ze
GWP Global Warming Potential	1430	approx. 600	<1***
ODP Ozone Depletion Potential	0	0	0
Toxicity	Class A (non toxic)	A	Class A**** (non toxic)
Flammability	1 not flammable	1 not flammable	2L**** not flammable at room temperatures
Applications covering	+	+	++ Larger operating envelope
Efficiency	+	+	++
Affected by F-gas phase down plan	YES	YES	NO

**Values in accordance with EN14511-3:2013. EER calculated for typical air conditioning application, 12/7°C - 30/35°C (30XW, 30XW-V and 30XWHV) and 12/7°C - 35°C (30XA and 30XAV).
***Based on IPCC 5th assessment (GWP 7 according of the 2010 assessment of the SAP of the Montreal protocol).
****Source: ISO 817:2014 : Designation and Safety Classification of Refrigerants.

Ecodesign and Energy Labelling

The energy efficiency improvement target of the European climate and energy package for 2030 strongly influences the heating, ventilation and air conditioning (HVAC) market.

Indeed buildings are the largest consumers of energy today and, of that consumption, HVAC systems account for considerably more than any other equipment. Providing its customers with energy efficient solutions is therefore now a key sustainable development opportunity for the HVAC industry.

Ecodesign and Energy Labelling for heat pumps

Since September 26, 2015, heat pumps are the first HVAC commercial products to be covered by the Ecodesign (heat pumps up to 400 kW) and Energy Labelling (heat pumps up to 70 kW) regulations. Products placed on the market before this date will not be affected. Conformity is mandatory for a product to obtain the CE marking.

Ecodesign

Ecodesign is an approach to product design that encourages manufacturers to consider the environmental impact of the product over its entire lifecycle.
In the European Union, the Ecodesign Directive 2009/125/EC establishes a framework for the setting of mandatory energy efficiency requirements for all energy-related products (ERPs).

For more information visit www.ecodesign.hvac.carrier.com

New energy efficiency metric: SCOP

The Seasonal Coefficient of Performance (SCOP) is a new European parameter to evaluate the energy efficiency of heat pumps. It replaces the Coefficient of Performance (COP), which measured the ratio of power consumed to power produced in the heating mode on a single operating point.

Unlike its predecessor, the SCOP is representative of operation during the heating season as it includes seasonal variations by defining several realistic measurement points. Together, these contribute to classification in the correct energy efficiency class. Carrier heat pumps are all in the classes A to A ++.

SCOP versus COP efficiency

TEMPERATURE		CAPACITY (KW)		AUXILIARY MODES (KWH)		HOURS	
COP	SCOP	COP	SCOP	COP	SCOP	COP	SCOP
1 temperature condition: 7°C	Several rating temperatures: -10°C to 16°C (average climate)	Full load	Partial load + Full load	No auxiliary power modes taken into consideration	Includes consumption auxiliary modes: - *Standby mode* - *Off mode* - *Thermostat off…*	N/A	Number of hours occuring at each air temperature (bin hours)

SCOP Calculation

SCOP is the ratio between annual heating demand and annual energy input over an entire heating season.

$$\text{SCOP} = \frac{\text{ANNUAL HEATING DEMAND}}{\text{ANNUAL ENERGY INPUT*}}$$

Energy Labelling

The aim of the Energy Labelling regulation is to provide end users with easy to understand information on product energy efficiency.
In addition, the European Energy Labelling regulation classifies products from G to A, according to their efficiency. This pulls the market towards more energy-efficient products by improving consumer information.

Example of energy labelling

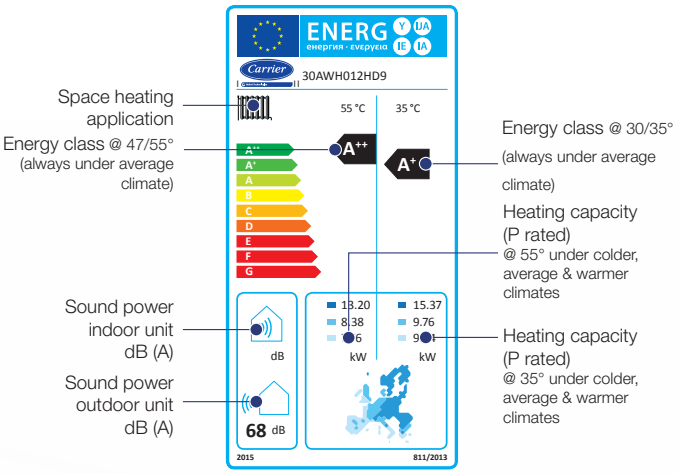

Ecodesign for process chillers

The new regulation EU 2015/1095 sets minimum energy efficiency requirements for professional refrigeration equipment including low temperature process chillers (leaving water temperature -8°C) and very low temperature process chillers (leaving water temperature -25°C).

According to the regulation, a process chiller is characterized by:
- An all year round operation
- A relatively constant cooling load profile with variation from 100% to 80%

LOAD PROFILE FOR PROCESS CHILLERS

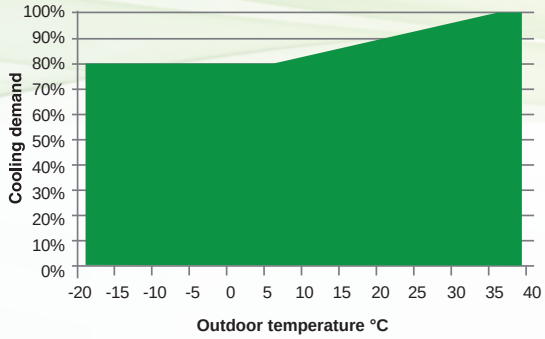

New energy efficiency metric : SEPR

The efficiency metric is called SEPR (Seasonal Energy Performance Ratio).
The SEPR is a result of a weighted calculation of the energy efficiency at every outdoor temperature for a whole year operation, under an average climate and with a cooling load profile varying from 100% to 80%.

$$\text{SEPR kW/kW} = \frac{\text{ANNUAL ENERGY DEMAND}}{\text{ANNUAL ENERGY CONSUMPTION}}$$

From July 1st, 2016, the minimum seasonal energy efficiency (SEPR) for low temperature process chillers (leaving water temperature -8°) shall be as below:

	SEPR
Air to water < 300 kW	2.24
Air to water > 300 kW	2.80
Water to water < 300 kW	2.86
Water to water > 300 kW	3.80

All Carrier low temperature chillers (brine option) achieve or exceed these efficiency requirements.

Ecodesign for air handling units

Starting January 1st, 2016, new air handling units shall comply with Ecodesign requirements.

Air handling units regulation

For air handling units (defined as units replacing air in a building), two Ecodesign product regulations already apply, setting minimum efficiency for electric motors and for fan motor assemblies.
The new regulation is going further. It is addressing the energy performance of ventilation units and sets energy performance requirements for complete unit including fans, filters and a Heat Recovery System based on SFPint (specific fan power inside the unit) limit fixed by the regulation.
There will be a next step in January 2018 with higher requirements.

The regulation is addressing :

- **Residential Ventilation Units** (RVU) with flow rate up to 250 m³/h (64, 4 L/s) or up to 1000 m³/h (277.8 L/s) when the manufacturer declares its use exclusively for residential application.

- **Non Residential Ventilation Units** (NRVU) with flow rate greater than 250 m³/h (64, 4 L/s) or 1000 m³/h (277.8 L/s). Non Residential Ventilation Units (NRVU) include **Unidirectional Ventilation Units** (UVU - supply or extract units) and **Bidirectional Ventilation Units** (BVU - double deck supply and extract units):

Unidirectional Ventilation Units

Supply unit + free exhaust

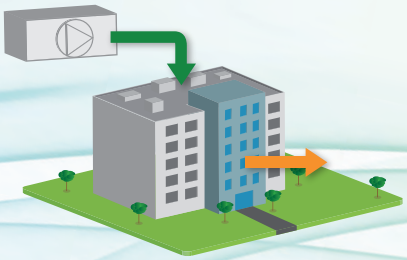

Exhaust unit + free supply

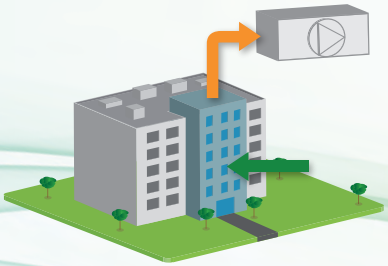

Separate supply & exhaust unit

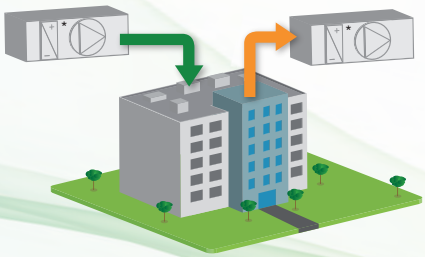

Bidirectional Ventilation Units

Double deck exhaust + supply unit

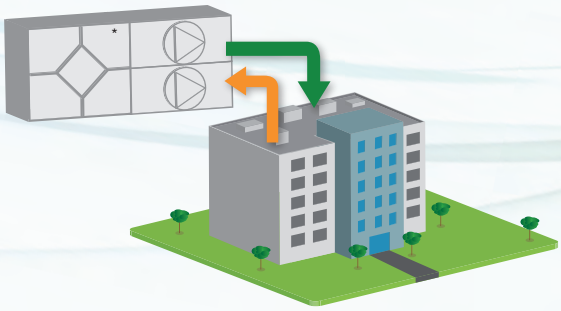

*heat recovery unit

Technical requirements for Unidirectional Ventilation Units*

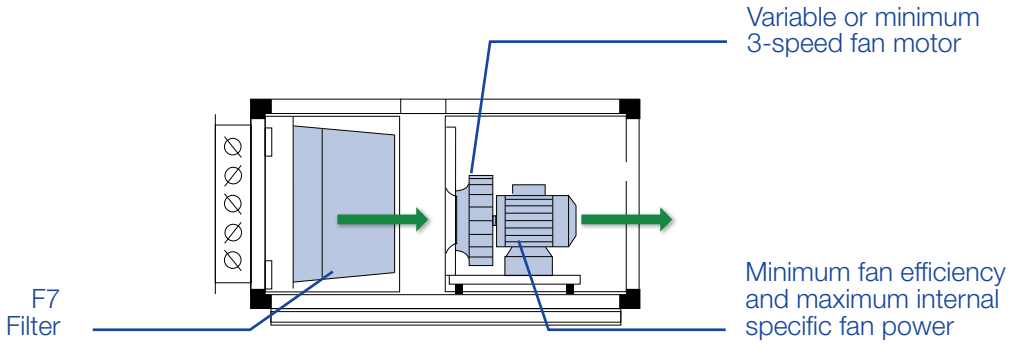

Technical requirements for Bidirectional Ventilation Units*

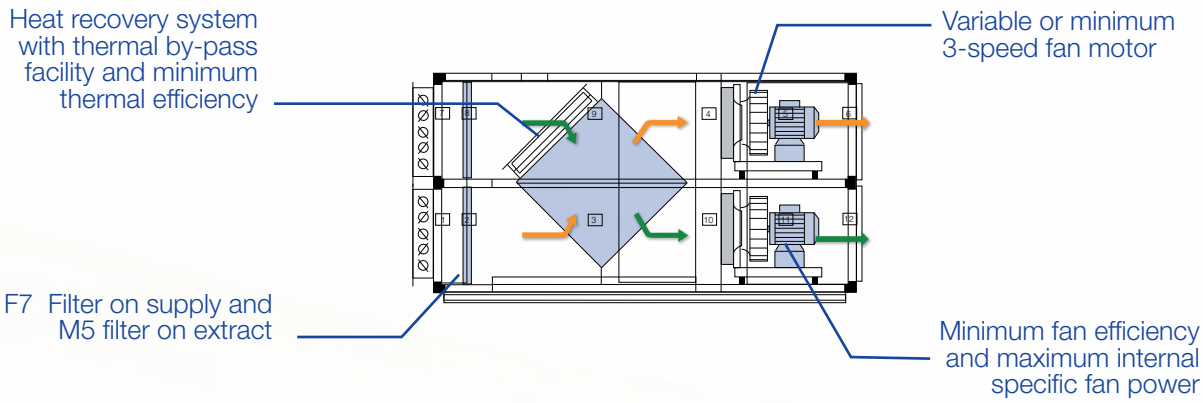

*reference model for calculation of SFPint

Carrier Service beyond your expectations

**Your daily challenge is a complex balance between maintaining optimal comfort levels, maximising system uptimes and minimising cost of ownership.
Carrier teams are committed to ensuring your peace of mind and supporting your business objectives throughout the lifecycle of your equipment.**

Customer needs come first

Proximity & responsiveness
Carrier's expert technicians are there to take action, quickly. Comprehensive and highly efficient maintenance processes mean your equipment works at peak performance level. If necessary, you can rely on Carrier Rental Systems and readily available spare parts to avoid extended downtime.

Expertise & consultancy
Carrier has experienced teams, an extensive network of branches, top grade logistics and powerful information systems. These industry-leading resources come together to deliver a best-in-class service.
Your Carrier experts will help you to find the right balance between enhancing energy efficiency and maximising your investments.

Proactivity
As your preferred partner, Carrier designs tailored maintenance programs to meet your goals and optimise your business performance.

Worldwide recognized expertise

Asset Management
- Advise on fast-moving regulatory environment
- Guidance for energy optimization solution
- Information on EH&S guidance
- Providing educational sessions

Technical expertise
Carrier technicians benefit from a multifaceted training program based on 110 years of industry experience to bring you top level, up-to-date service.
- Technical training to ensure its teams remain familiar with all equipment types
- Environmental, Health and Safety (EH&S) training to ensure the highest standards of ongoing safety
- Service-oriented behavior training to demonstrate your commitment to your own customers

ESSENTIAL SERVICES

MODERNISATION

- Improved reliability
- Optimised energy performance
- Compliance with new regulations

Carrier experts measure your equipment's performance throughout its lifecycle. Their analysis guides you in maintaining if not improving it. Carrier proposes Thermal Energy Storage turnkey solutions for energy demand management and sustainable approach to buildings

MAINTENANCE

- Reduced, tightly controlled running costs
- Maximised equipment lifetime
- Full F-gas compliance for chillers

Carrier offers a comprehensive range of service agreements for all brands of chillers, rooftops, split and VRF (Variable Refrigerant Flow) air conditioning, air handling units, controls and accessories, from preventive to predictive maintenance.

REPAIR

- Minimised downtime and losses
- Increased occupant satisfaction
- Emergency Repair Kits available on site

Carrier's factory-trained technicians fix your systems expertly and efficiently. For quick and easy repairs, Carrier designed Emergency Repairs kits. Stored near the unit, they are always available on site.

SMART SERVICES

MONITORING

- Easy and fully secure access to your HVAC system
- Actionable analysis by nearby experts
- Optimised and customised monitoring

An advanced monitoring service offer allows you to track and monitor your HVAC system performance and take preventive and corrective actions remotely.

ENERGY MANAGEMENT

- Improved sustainability
- Maximised operating savings
- Easy operation and set-up

Carrier designed smart energy management solutions for low energy consumption, high performance systems and enhanced indoor air quality.

ALTERNATIVE SERVICES

RENTAL SYSTEMS

- Ready on-site temperature control or pump solution
- Secured production and optimal comfort
- Alternative to asset investments

Whenever you need a temporary cooling or heating solution, Carrier Rental Systems organization provides tailored solutions from design through installation to decommissioning.
(For seasonal capacity requirement, emergency, planned service work, facility refurbishment, event, contingency planning…)

SPARE PARTS

- State-of-the-art logistics with reliable next day deliveries
- Facilitated parts selection
- Comprehensive parts solutions for all equipment

Carrier's powerful supply chain provides you with genuine manufacturer parts and consumables with high service levels.
The dedicated expert team facilitates your selection.

A COMPREHENSIVE RANGE OF SERVICE SOLUTIONS FOR RELIABLE, COST-EFFECTIVE AND SUSTAINABLE PERFORMANCE

Carrier

United Technologies

DESIGNING INNOVATIVE SOLUTIONS

AIR CONDITIONING & HEATING SOLUTIONS

FORCE OR INTELLIGENCE ?

AQUAFORCE® WITH GREENSPEED® INTELLIGENCE, BECAUSE YOU SHOULD NOT HAVE TO CHOOSE.

- High efficiency at both full and partial load
- Unrivalled reliability
- Advanced control: easy system integration
- Adaptability

Since Willis Carrier developed the world's first modern air conditioning system in 1902, Carrier's engineering teams have been designing advanced solutions for your business. And **because you should not have to choose between force or intelligence**, Carrier incorporated the experience, efficiency and reliability of the AquaForce range with the smartest innovative technology: Greenspeed intelligence.

The 30XAV and 30XW-V/30XWHV units are the premium solutions for industrial and commercial applications where maximum quality and optimal performances at partial and full load are required.

greenspeed AQUAFORCE

www.carrier.com

Cooling

Type		Range	Refrigerant	Cooling capacity, kW	Page
Air-cooled units, axial fan					
Compact heat recovery units		**30RB 008-015**	R-410A	8 -14	40
		30RB 017-040	R-410A	16 - 40	50
	NEW	**30RBV 017-021**	R-410A	15 - 18	58
		30RBY 017-040	R-410A	16 - 42	68
	NEW	**30PA / 30PAC**	R-410A	17 - 36	72
		30RBS 039-160	R-410A	40 - 156	94
		30RBSY 039-160	R-410A	40 - 153	108
		30RBM / 30RBP 160-520	R-410A	164 - 528	128
		30RB 602-802	R-410A	606 - 774	148
Air-cooled units, axial fan		**30XAS 242-482**	R-134a	232 - 486	158
		30XA 252-1702	R-134a	267 - 1682	170
		30XAV	R-134a	504 - 1138	196
	NEW	**30XA-ZE / 30XAV-ZE**	R1234ze	300 - 1100	210
Water-cooled/condenserless units					
With scroll compressors		**30WG / 30WGA 020-090**	R-410A	25 - 95	212
		30RW / 30RWA 110-300	R-410A	25 - 95	234
With screw compressors		**30HXC 080-375**	R-134a	286 - 1302	240
		30XW 254-1762	R-134a	273 - 1756	248
		30XW-V 580-1710	R-134a	587 - 1741	262
	NEW	**30XWP-ZE / 30XWV-ZE**	R1234ze	270 - 1320	274
		23XR/XRV	R-134a	970 - 1880	278
With centrifugal compressors		**19XR/XRV single stage**	R-134a	1000 - 5300	282
	NEW	**19XR/XRV double stage**	R-134a	2800 - 10500	286
Air-cooled drycoolers					
With axial fan	NEW	**09PE**	-	Up to 1100	290
	NEW	**09VE**	-	180 - 1350	298
Absorption chillers					
Single-effect					
Hot water-fired absorption chillers	NEW	**16LJ-A 01-82**	-	**83 - 3956**	304
Steam-fired absorption chillers		**16TJ 11-53**	-	**350 - 2500**	330
Double-effect					
Steam-fired absorption chillers		**16NK 11- 81**	-	**345 - 4652**	346
Gasketed plate heat exchangers					
	NEW	**10TE**	-	5 - 5000	350

30RB

Nominal cooling capacity 8-14 kW

AQUASNAP®

Easy and fast installation

Compact, reliable and efficient

Class A variable speed circulator available

The new generation of AquaSnap liquid chillers was designed for commercial applications such as the air conditioning of offices and hotels etc.

The new AquaSnap units integrate the latest technological innovations:

- Non-ozone depleting refrigerant R410A
- Scroll or rotary compressors
- Low-noise fans
- Auto-adaptive microprocessor control

The AquaSnap units are available with or without integrated hydronic module depending on the application. AquaSnap units equipped with a hydronic module integrated into the unit chassis, limit installation to straightforward operations like connection of the power supply and the water supply and the return piping.

For better efficiency and to be in accordance with ECODESIGN's rules, hydronic modules include a class A variable speed circulator. This circulator allows a power input reduction and offers better available pressure for small sizes.

Physical data

30RB				008	012	015
Cooling						
Version without pump	**C1**	**Nominal capacity**	kW	7.95	10.83	13.99
Full load performances*	C1	EER	kW/kW	3.10	2.93	2.90
	C1	Eurovent class cooling		A	B	B
	C2	**Nominal capacity**	kW	10.12	14.97	17.73
	C2	EER	kW/kW	3.69	3.65	3.44
	C2	Eurovent class cooling		B	B	D
	C3	**Nominal capacity**	kW	5.1	7.0	8.4
	C3	EER	kW/kW	2.24	1.95	1.90
Seasonal efficiency*		ESEER	kW/kW	3.30	3.24	3.08
Version without pump	**C1**	**Nominal capacity**	kW	8.0	10.9	14.1
Full load performances**	C1	EER	kW/kW	3.17	3.01	3.00
	C2	**Nominal capacity**	kW	10.2	15.1	17.9
	C2	EER	kW/kW	3.83	3.80	3.59
	C3	**Nominal capacity**	kW	5.1	7.0	8.5
	C3	EER	kW/kW	2.27	1.98	1.93
Sound levels						
Standard unit						
Sound power level(1) (C1)			dB(A)	68	70	71
Sound pressure level at 4 m(2) (C1)			dB(A)	48	50	51
Dimensions						
Length			mm	908	908	908
Depth			mm	350	350	350
Height			mm	821	1363	1363
Operating weight(3)						
Unit without circulator (X version)			kg	73.3	108	110
Unit with circulator (- version)			kg	75.5	114	116
Compressors				One hermetic rotary compressor	One hermetic scroll compressor	One hermetic scroll compressor
Refrigerant				R410A		
Circuit charge(3)			kg	2.15	2.63	3.18
			CO_2 eq.	4.5	5.5	6.6
Air heat exchangers				Copper tubes and aluminium fins		
Fans				3 blades fan		
Quantity				1	2	2
Water heat exchanger (X version)						
Water pressure drop (C1)			kPa	15	21	33
Water pressure drop (C2)			kPa	28	36	49
Min. system water content			l	28	42	52
Max. water-side operating pressure			kPa	300	300	300
Hydronic module (- version)						
Pump				Variable speed circulator		
Expansion tank volume			l	2	2	2
Availabale static pressure (C1)			kPa	52	74	60
Availabale static pressure (C2)			kPa	37	54	33
Min. system water content			l	28	42	52
Max. water-side operating pressure			kPa	300	300	300
Water connections with or without hydronic module						
Diameter			inch	1 M	1 M	1 M
Outside tube diameter			mm	25.4 M	25.4 M	25.4 M
Chassis paint colour				Beige		

* In accordance with standard EN14511-3:2013
** Not in accordance with standard EN14511-3:2013
C1 Cooling mode conditions: evaporator water entering/leaving temperature 12°C/7°C, outside air temperature 35°C, evaporator fooling factor 0 m² K/W
C2 Cooling mode conditions: evaporator water entering/leaving temperature 23°C/18°C, outside air temperature 35°C, evaporator fooling factor 0 m² K/W
C3 Cooling mode conditions: evaporator water entering/leaving temperature 0°C/-5°C, outside air temperature 35°C, evaporator fooling factor 0 m² K/W, with 20% ethylene glycol
(1) In dB ref=10-12 W, (A) weighting. Declared dualnumber noise emission values in accordance with ISO 4871 (with an associated uncertainty of +/-3dB(A)). Measured in accordance with ISO 9614-1.
(2) In dB ref 20µPa, (A) weighting. Declared dualnumber noise emission values in accordance with ISO 4871 (with an associated uncertainty of +/-3dB(A)). For information, calculated from the sound power level Lw(A).
(3) Weights are guideline only. Refer to the unit nameplate.

Eurovent certified data

Electrical data

30RB		008	012	015
Power circuit				
Nominal power supply	V-ph-Hz	400-3-50 + neutral		
Voltage range	V	376-424		
Control circuit supply		24 V via internal transformer		
Maximum start-up current (Un)*	A	30	66	73
Unit power factor at nominal capacity**		0.88	0.84	0.85
Maximum operating power input**	kW	3.1	4.4	5.5
Nominal unit operating current draw***	A	4.5	6.3	9.1
Power fuse current (gL fuse)	A	10	16	20
Power supply cable section	mm^2	H07RN-F - x 2.5 mm^2	H07RN-F - 5 x 2.5 mm^2	H07RN-F - 5 x 2.5 mm^2
Maximum pump current (external pump or water circulator)	A	2	2	2
Number of fan motor capacitors (5 µF/450 V)		1	2	2
Power supply cable section, remote controller	mm^2	H03VV-F - 7 x 0.5 mm^2	H03VV-F - 7 x 0.5 mm	H03VV-F - 7 x 0.5 mm

* Maximum instantaneous start-up current (locked rotor current of the compressor).
** Power input, compressors and fans, at the unit operating limits (saturated suction temperature 10°C, saturated condensing temperature 65°C) and nominal voltage of 400 V (data given on the unit nameplate).
*** Standardised Eurovent conditions: water heat exchanger entering/leaving water temperature 12°C/7°C, outside air temperature 35°C.

Type key

30RB 008 - 9 B

- **30RB** — Liquid chilling packages
- **B** — Revision status
- **9** — 400 V 3-phases + N
- **-** — Unit options
  - \- With hydronic kit
  - X Without hydronic kit
- **008** — Nominal size
  - 008 - nominal size 8 kW
  - 012 - nominal size 12 kW
  - 015 - nominal size 15 kW

Accessory

Option	Description	Advantages	Use 30RB
Remote User Interface HMI	Remotely installed user interface (via communication bus)	Remote unit control up to 300 m	All sizes

Features and advantages

Quiet operation

- Compressors
  - Low-noise scroll or rotary compressors with low vibration levels
  - The compressors are placed on anti-vibration mountings and maintenance-free.
- Air heat exchanger section
  - The latest-generation low-noise fans are now even quieter and do not generate intrusive low-frequency noise
  - Rigid fan installation for reduced start-up noise

Advanced technology and performance

- The air management system, consisting of the propeller fan, orifice and air discharge grille, guarantees minimised sound levels.
- Wide temperature operating range: AquaSnap units can operate efficiently in extreme temperature conditions. To suit the requirements of all applications, the new AquaSnap units can work at low-ambient conditions in cooling mode (down to -10°C and up to 46°C outside temperature).

Patented fan blade shape and grille profile with low pressure drop

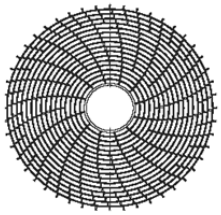

Fast and simple installation and service

- Easy access to all internal components: simply undo three screws to remove the complete front panel to access the refrigerant piping connections, control box and electrical connections, as well as the compressor and other key parts.
- Advanced circuit design and component selection has resulted in a compact unit with an exceptionally small foot-print that is easy to transport even through narrow doors.
- Reduced operating weight and a handle on the unit panels to facilitate transport.
- 3 bar pressure relief valve as standard
- Internal expansion tank
- High-pressure refrigerant protection
- Water flow switch to ensure that the circuits operate with the correct water flow rate.
- Various power cable outlet options: pre-punched holes in the cabinet panels permit cable exit on the side, front or rear.
- An HMI graphic service interface can be used to monitor and set the unit operating parameters.
- All units are equipped with 1 inch gas MPT water connections.
- Option for an integrated hydronic module reduces space requirements and simplifies the installation. Only the power and the water supply and the return piping need to be connected.

- Specially shaped anchorage feet ensure correct and safe unit fixing to the foundation.

Economical operation

- Increased energy efficiency
  - The high energy efficiency of the AquaSnap units is the result of a long qualification and optimisation process.
  - AquaSnap units have Eurovent energy efficiency class A (size 008) or B (sizes 012 and 015)
- Reduced maintenance costs
  - Maintenance-free scroll or rotary compressors
  - Fast diagnosis of possible incidents and their history via the Pro-Dialog+ control
  - R410A refrigerant is easier to use than other refrigerant blends

Environmental care

- Non-ozone depleting R410A refrigerant
  - Chlorine-free refrigerant of the HFC group with zero ozone depletion potential
  - Very efficient - gives an increased energy efficiency ratio (EER)
- Leak-tight refrigerant circuit
  - Brazed refrigerant connections for increased leak-tightness
  - Verification of pressure transducers and temperature sensors without transferring refrigerant charge
- The components of AquaSnap systems are free of any hazardous substances.
- The new packaging ensures high protection during transport and handling and is 100% recyclable.

Superior reliability

- Auto-adaptive control
  - Control algorithm prevents excessive compressor cycling and permits reduction of the water quantity in the hydronic circuit (Carrier patent)
- Exceptional endurance tests
  - Corrosion resistance tests in salt mist in the laboratory
  - Accelerated ageing test on components that are submitted to continuous operation: compressor piping, fan supports
  - Transport simulation test in the laboratory on a vibrating table.
  - Packaging crash test to ensure that the units are adequately protected against accidental shocks.
- All units are tested at various stages on the production line for circuit leakage, electrical compliance, water and refrigerant pressures.
  - End-of-line test of all unit operating parameters.
  - Third-party testing and certification - all performances are certified by Eurovent and unit safety is certified by DEKRA.

Corrosion-resistant casing

Controls

User interfaces

- The AquaSnap can use the following user interfaces:
  - Dry contacts
  - The AquaSnap Junior remote controller (option)

Pro-Dialog+ control

Pro-Dialog+ combines intelligence with operating simplicity. The control constantly monitors all machine parameters and precisely manages the operation of compressors, expansion devices, fans and of the water heat exchanger water pump for optimum energy efficiency.

- Energy management
  - Seven-day internal time schedule clock: permits unit on/off control and operation at a second set point
  - Set point reset based on the outside air temperature or the return water temperature or on the water heat exchanger delta T
  - Master/slave control of two units operating in parallel with operating time equalisation and automatic change-over in case of a unit fault.
  - Change-over based on the outside air temperature
- Integrated features
  - Night mode: capacity and fan speed limitation for reduced noise level

Operating limits

Evaporator water flow rate

30RB	Flow rate, l/s Minimum	Maximum*	Maximum**
008	0.12	0.24	0.38
012	0.12	0.52	0.52
015	0.12	0.88	0.62

* Maximum flow rate at an available pressure of 50 kPa (unit with hydronic module)
** Maximum flow rate at condition 1 - evaporator water entering/leaving temperature 12°C/7°C, outside air temperature 35°C.

Operating range

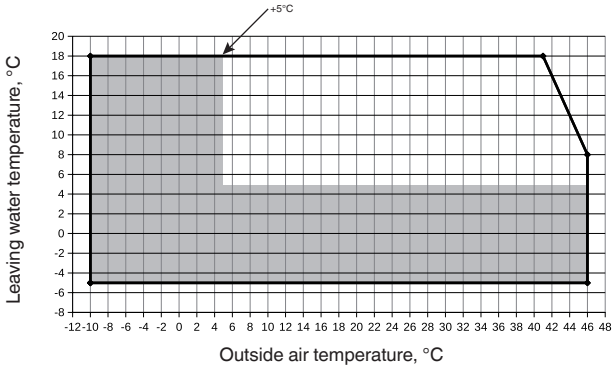

Operating range with anti-freeze solution and Pro-Dialog configuration.

Available static system pressure (units with hydronic module)

30RB 008-9

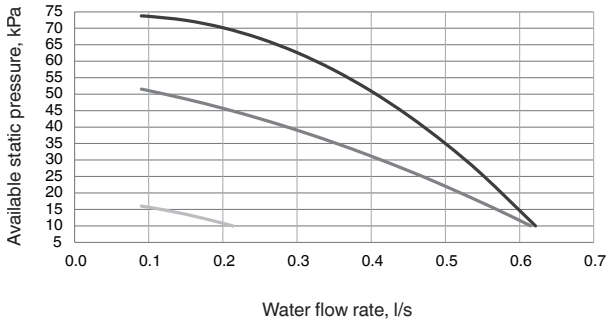

30RB 012-9/30RB 015-9

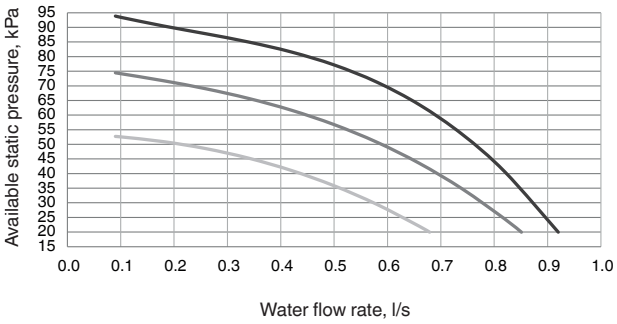

High speed
Medium speed
Low speed

Pressure drop curves (units without hydronic module)

30RB 008X9

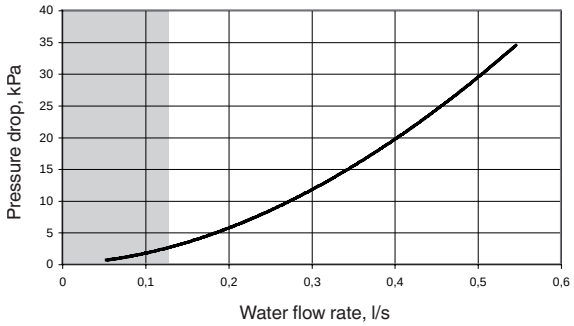

30RB 012X9/30RB 015X9

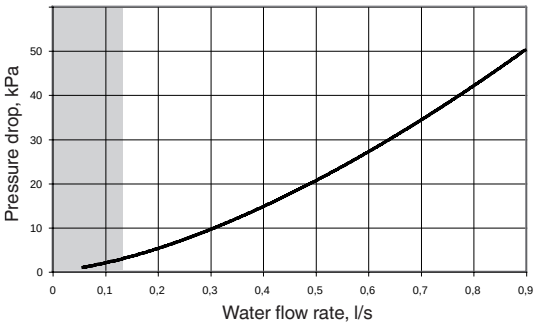

Hydronic module

The hydronic module reduces the installation time. The unit is factory-equipped with the main hydronic components required for the installation: variable speed circulator, expansion tank and safety valve.

The water heat exchanger and the hydronic module are protected against frost down to -10°C, using pump cycling.

The hydronic module is integrated into the unit without increasing its dimensions and saves the space normally used for the water pump.

Hydronic components

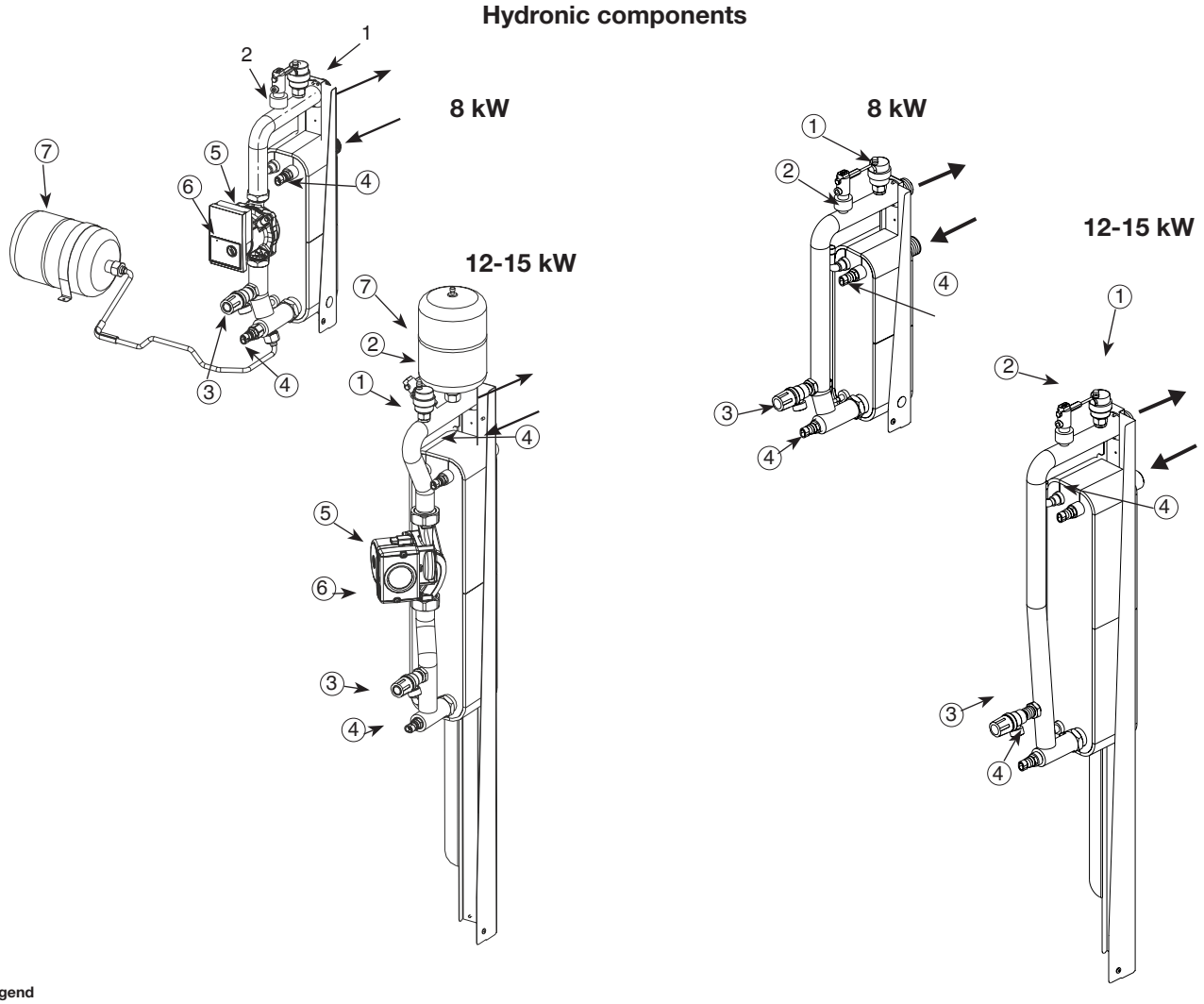

Legend

30RB___9
Integrated water circuit (with pump)
1 Automatic purge valve
2 Flow switch
3 Safety valve (1/2" outlet)
4 Temperature sensor
5 Circulation pump
6 Plug to unblock seized pump
7 Expansion tank

30RB___X9
Integrated water circuit (without pump)
1 Automatic valve with air vent
2 Flow switch
3 Safety valve (1/2" outlet)
4 Temperature sensor

Recommended hydronic circuit installation

Typical water circuit diagram, 30RB units with integrated water pump

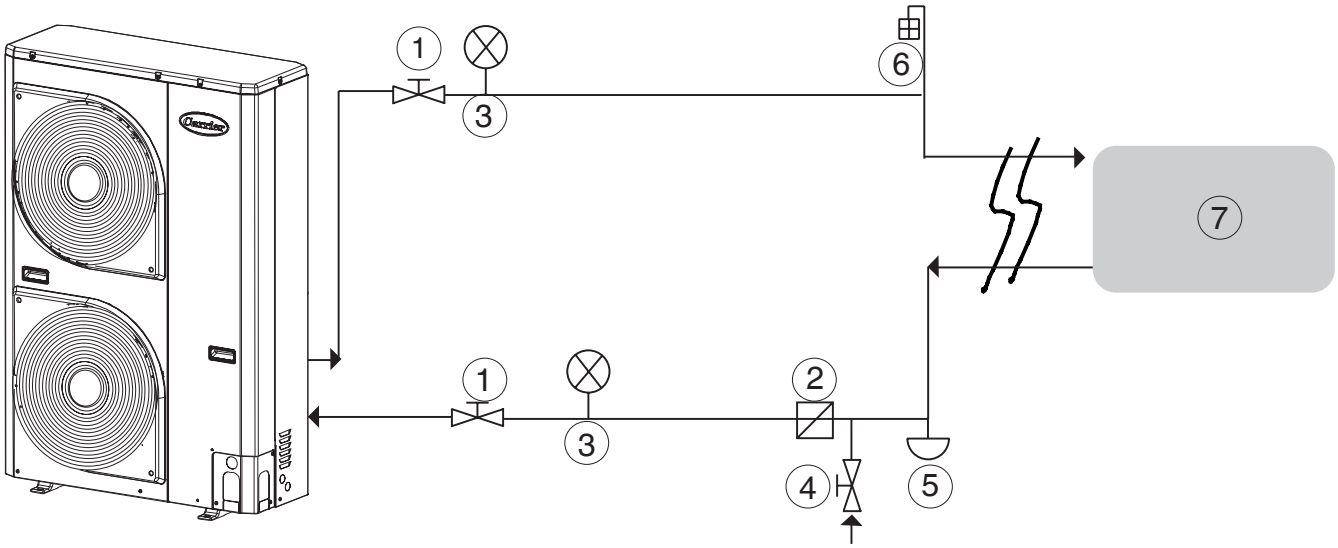

Legend
1 Shut-off valves
2 Line filter for water (10 mesh/inch)
3 Pressure gauges
4 Charge valve
5 System drain valve (at the lowest point of the circuit)
6 Air vent valve (in the highest part of the circuit)
7 Customer system

Typical water circuit diagram, 30RB units without integrated water pump

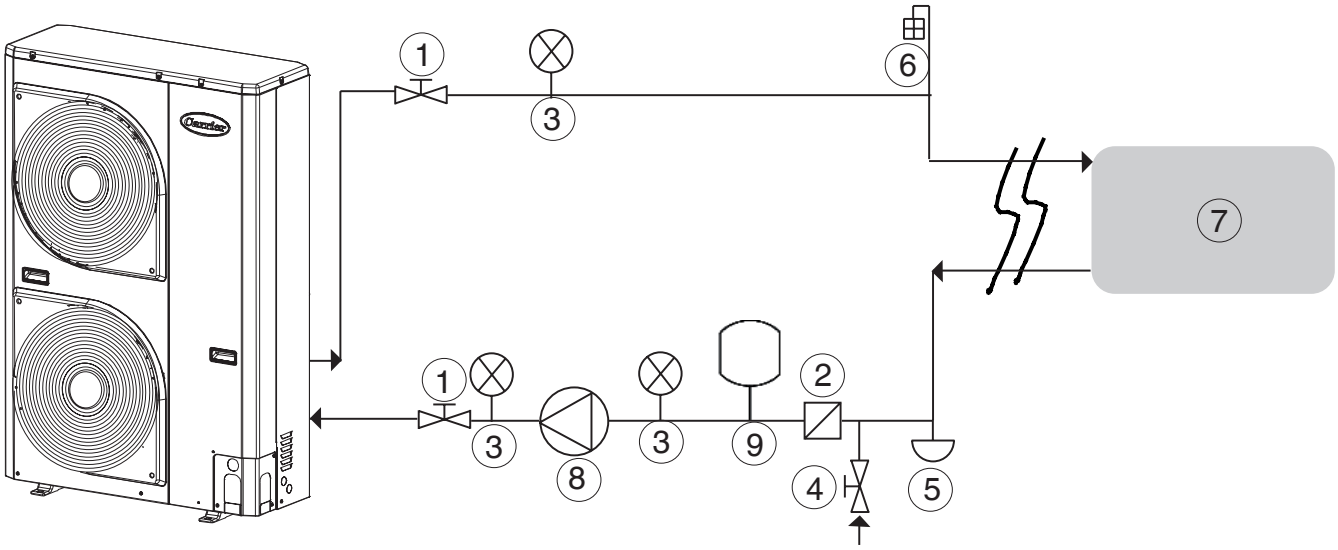

Legend
1 Shut-off valves
2 Line filter for water (10 mesh/inch)
3 Pressure gauges
4 Charge valve
5 System drain valve (at the lowest point of the circuit)
6 Air vent valve (in the highest part of the circuit)
7 Customer system
8 Water circulation pump
9 Expansion tank

Dimensions, mm

30RB 012-015

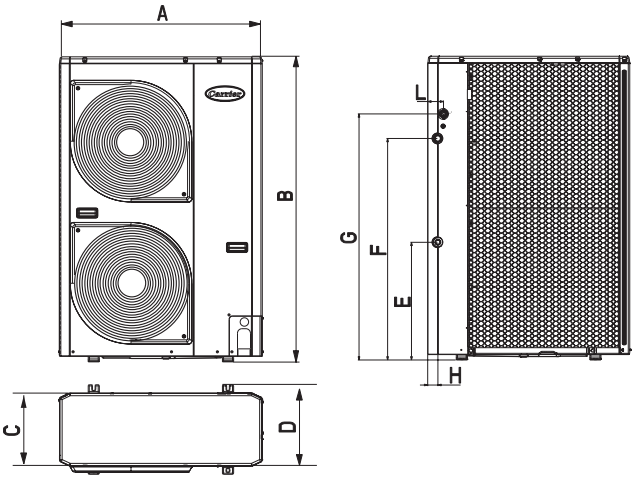

30RB 008

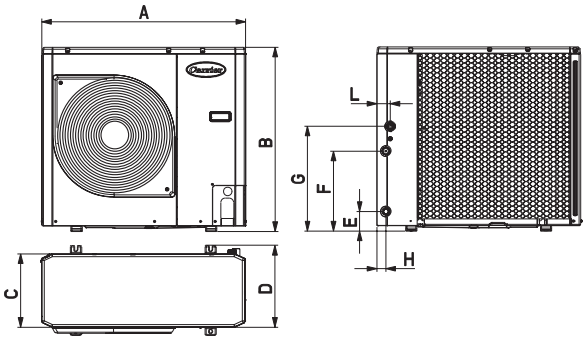

30RB	A	B	C	D	E	F	G	H	L	Net weight, kg	Gross weight, kg
008-9 with hydronic module	908	821	326	350	87	356	466	40	60	75.5	82.5
008X9 without hydronic module	908	821	326	350	87	356	466	40	60	73.5	80.5
012-9 with hydronic module	908	1363	326	350	529	995	1105	44	69	114	121
012X9 without hydronic module	908	1363	326	350	529	995	1105	44	69	108	114
015-9 with hydronic module	908	1363	326	350	529	995	1105	44	69	116	123
015X9 without hydronic module	908	1363	326	350	529	995	1105	44	69	110	116

Clearances, mm

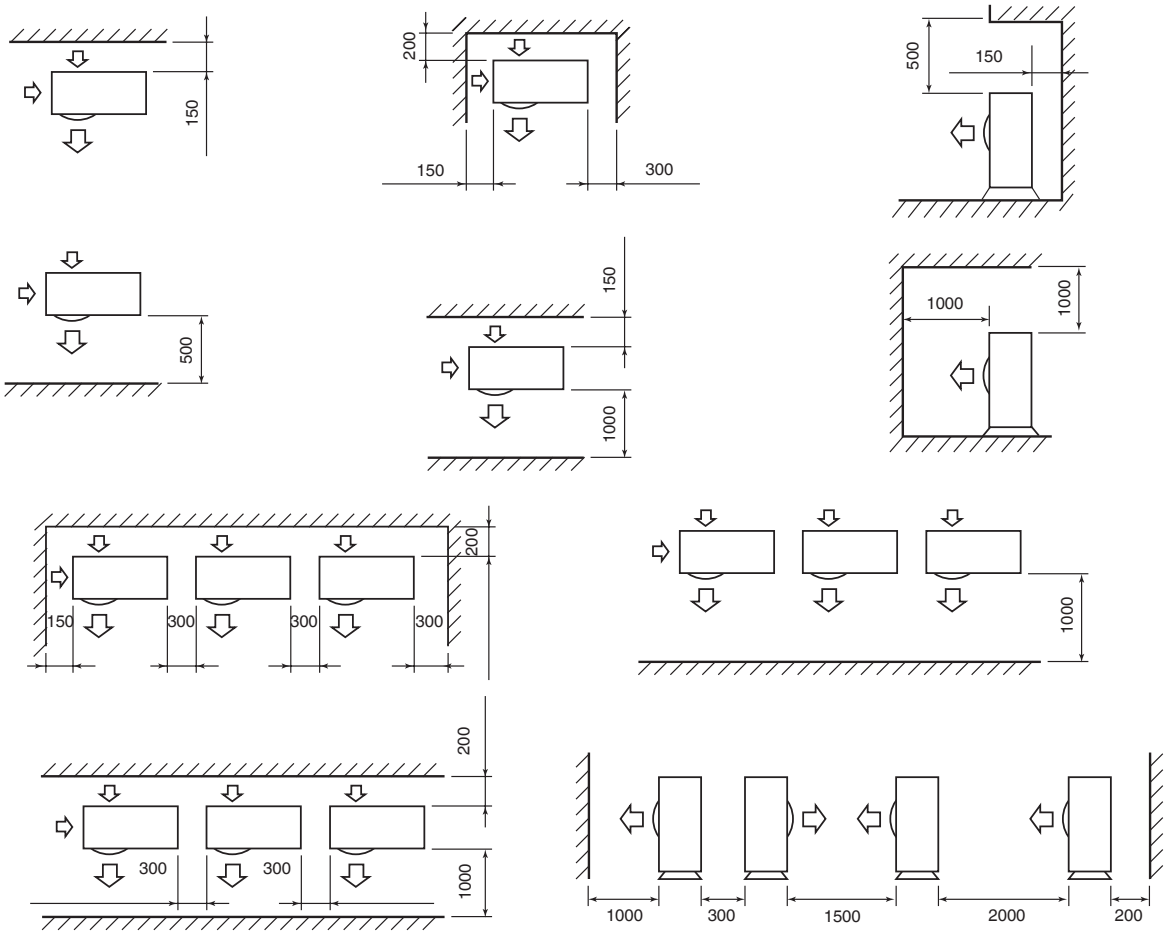

30RB

Nominal cooling capacity 16-40 kW

AQUASNAP®

Easy and fast installation

Hydronic module available

Economical operation

Superior reliability

The AquaSnap liquid chiller range was designed for commercial applications such as the air conditioning of offices and hotels, etc.

The new AquaSnap units integrate the latest technological innovations:

- Non-ozone depleting refrigerant R410A
- Scroll compressors
- Low-noise fans
- Auto-adaptive microprocessor control

The AquaSnap units are equipped with a hydronic module integrated into the unit chassis, limiting the installation to straightforward operations like connection of the power supply and the water supply and return piping.

Physical data

30RB				017	021	026	033	040
Cooling								
Full load performances*	C1	Nominal capacity	kW	16.4	21.4	27.3	33.3	41.4
	C1	EER	kW/kW	3.04	3.11	3.08	3.28	2.96
	C1	Eurovent Energy Class		B	A	B	A	B
	C2	Nominal capacity	kW	22.7	29.5	38.6	45.8	56.9
	C2	EER	kW/kW	3.80	3.86	4.01	4.11	3.52
Seasonal Efficiency*		ESEER	kW/kW	3.46	3.47	3.44	3.62	3.29
Sound Power Level Standard Unit			dB(A)	72	74	78	78	80
Operating weight†								
Standard unit (with hydronic module)			kg	189	208	255	280	291
Standard unit (without hydronic module)			kg	173	193	237	262	273
Refrigerant				R-410A				
Compressor				One hermetic scroll compressor				
Control				Pro-Dialog+				
Fans			%	Two twin-speed axial fans, 3 blades		One twin-speed axial fan, 7 blades		
Air flow				2212	2212	3530	3530	3530
Evaporator				Plate heat exchanger				
Condenser				Copper tubes and aluminium fins				
Unit with hydronic module Pump				One single-speed pump, screen filter, expansion tank, flow switch, pressure gauge, automatic air purge valve, safety valve				
Entering water connection			in	1-1/41	1-1/41	1-1/4	1-1/4	1-1/4
Leaving water connection			in	1	1	1-1/4	1-1/4	1-1/4
Nominal operating current			A	1.30	1,4	2,4	2,6	2,8
Dimensions								
Length			mm	1136	1136	1002	1002	1002
Depth			mm	584	584	824	824	824
Height			mm	1579	1579	1790	1790	1790

C1 Cooling mode conditions: Evaporator Water heat exchanger, entering/leaving temperature 12°C/7°C, fouling factor 0 m² K/W. Condenser Water heat exchanger, entering/leaving temperature 30°C/35°C, fouling factor 0 m² K/W.
C2 Cooling mode conditions: Evaporator Water heat exchanger, entering/leaving temperature 23°C/18°C, fouling factor 0 m² K/W. Condenser Water heat exchanger, entering/leaving temperature 30°C/35°C, fouling factor 0 m² K/W.
* In accordance with standard EN14511-3:2013
† Weight shown is a guideline only. The dimensions shown are for the standard unit.

Eurovent certified data

Electrical data

30RB		580	630	810	880	1150
Power circuit						
Nominal power supply ± 6%	V-ph-Hz	400-3-50 ± 10%				
Control circuit supply		24 V via internal transformer				
Maximum start-up current (Un)*	A	75	95	118	118	176
Maximum operating power input**	kW	7.8	9.1	11	13.8	17.5
Nominal unit operating current draw***	A	8	12	16	17	25

* Maximum instantaneous start-up current (locked rotor current of the compressor).
** Power input, compressors and fans, at the unit operating limits (saturated suction temperature 10°C, saturated condensing temperature 65°C) and nominal voltage of 400 V (data given on the unit nameplate).
*** Standardised Eurovent conditions: water heat exchanger entering/leaving water temperature 12°C/7°C, outside air temperature 35°C.

Type key

30R B - 021 C H E - B - - -

- **Product Range**
- **B - Cooling only AquaSnap**
- **Standard version**
- **Nominal capacity**
- **C - Power supply with neutral cable (not available for size 40)**
  D - Power supply without neutral cable
- **0 - Without hydronic module**
  H - With hydronic module with expansion tank
  F - With hydronic module with expansion tank and water filling system
  R - With hydronic module, without expansion tank
  Z - With hydronic module, w/o exp. tank, with water filling system
- **- - Without coil protection**
  E - Epoxy coil-protection (Gold-fin)
- **Standard**
- **- - Without gateway**
  B - CCN Jbus gateway
  C - CCN Bacnet gateway
  D - CCN LONtalk gateway
- **- - Standard**
  A - Remote User Interface HMI
- **New option (not used)**
- **Revision status**

Features and advantages

Quiet operation

- Compressors
  - Low-noise scroll or rotary compressors with low vibration levels
  - The compressor assembly is supported by anti-vibration mountings.
- Air heat exchanger section
  - Vertical air heat exchanger coils
  - The latest-generation low-noise fans are now even quieter and do not generate intrusive low-frequency noise
  - Rigid fan installation for reduced start-up noise.

Easy and fast installation

- Integrated hydronic module
  - High-pressure centrifugal water pump
  - Water filter protecting the water pump against circulating debris
  - High-capacity membrane expansion tank ensures pressurisation of the water circuit
  - Overpressure valve, set to 4 bar
  - Pressure gauge to measure the system pressure.
  - Automatic purge valve positioned at the highest point of the hydronic module to remove air from the system.
  - Thermal insulation and frost protection down to -10°C, using an electric resistance heater and pump cycling.
  - Integrated water fill system to ensure correct water pressure (option)
- Physical features
  - With its small footprint the unit blends in with any architectural styles.
  - The unit is enclosed by easily removable panels, covering all components (except air heat exchanger and fans).
- Simplified electrical connections
  - A single power supply point (power supply without neutral available as an option and in standard for units size 40kW)
  - Main disconnect switch with high trip capacity
  - Transformer for safe 24 V control circuit supply included
- Fast commissioning
  - Systematic factory operation test before shipment
  - Quick-test function for step-by-step verification of the instruments, electrical components and motors.

Economical operation

- Increased energy efficiency at part load
  - Eurovent energy efficiency class A and B (in accordance with EN14511-3:2013) in cooling and heating mode. The exceptionally high energy efficiency of the AquaSnap unit is the result of a long qualification and optimisation process.
- Reduced maintenance costs
  - Maintenance-free scroll compressors
  - Fast diagnosis of possible incidents and their history via the Pro-Dialog+ control
  - R410A refrigerant is easier to use than other refrigerant blends

Environmentally balanced

- Non-ozone depleting R410A refrigerant
  - Chlorine-free refrigerant of the HFC group with zero ozone depletion potential
  - Very efficient - gives an increased energy efficiency ratio (EER)
- Leak-tight refrigerant circuit
  - Brazed refrigerant connections for increased leak-tightness
  - Verification of pressure transducers and temperature sensors without transferring refrigerant charge

Superior reliability

- State-of-the-art concept
  - Cooperation with specialist laboratories and use of limit simulation tools (finite element calculations) for the design of the critical components, e.g. motor supports, suction/discharge piping etc.
- Auto-adaptive control
  - Control algorithm prevents excessive compressor cycling and permits reduction of the water quantity in the hydronic circuit (Carrier patent)
- Exceptional endurance tests
  - Corrosion resistance tests in salt mist in the laboratory
  - Accelerated ageing test on components that are submitted to continuous operation: compressor piping, fan supports
  - Transport simulation test in the laboratory on a vibrating table.

Controls

Pro-Dialog+ control

Pro-Dialog+ combines intelligence with operating simplicity. The control constantly monitors all machine parameters and precisely manages the operation of compressors, expansion devices, fans and of the water heat exchanger water pump for optimum energy efficiency.

Pro-Dialog+ interface

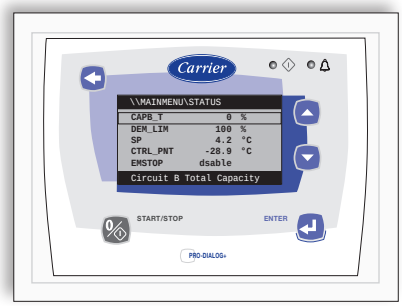

- Energy management
  - Seven-day internal time schedule clock: Permits unit on/off control and operation at a second set point
  - Set point reset based on the outside air temperature or the return water temperature or on the water heat exchanger delta T
  - Master/slave control of two units operating in parallel with operating time equalisation and automatic change-over in case of a unit fault.
  - Change-over based on the outside air temperature
- Integrated features
  - Night mode: Capacity and fan speed limitation for reduced noise level
- Ease-of-use
  - The new backlighted LCD interface includes a manual control potentiometer to ensure legibility under any lighting conditions.
  - The information is displayed clearly in English, French, German, Italian and Spanish (for other languages please consult Carrier)
  - The Pro-Dialog+ navigation uses intuitive tree-structure menus, similar to the Internet navigators. They are user-friendly and permit quick access to the principal operat-ing parameters: number of compressors operating, suction/discharge pressure, compressor operating hours, set point, air temperature, entering/leaving water temperature.

Remote operating mode with volt-free contacts (standard)

A simple two-wire communication bus between the RS485 port of the AquaSnap and the Carrier Comfort Network offers multiple remote control, monitoring and diagnostic possibilities. Carrier offers a vast choice of control products, specially designed to control, manage and supervise the operation of an air conditioning system. Please consult your Carrier representative for more information on these products.

- Start/stop: Opening of this contact will shut down the unit
- Dual set point: Closing of this contact activates a second set point (example: Unoccupied mode)
- Alert indication: This volt-free contact indicates the presence of a minor fault
- Alarm indication: This volt-free contact indicates the presence of a major fault that has led to the shut-down of the unit
- User safety: This contact can be used for any customer safety loop, closing of the contact generates a specific alarm
- Out of service: This signal indicates that the unit is completely out of service
- Unit capacity: This analogue output (0-10 V) gives an immediate indication of the unit capacity
- Compressor operation: This contact signals that the compressor is in operation

Operating limits

Water heat exchanger water flow rate

30RB	Flow rate, l/s Minimum	Maximum*	Maximum**
017	0.45	1.39	1.26
021	0.57	1.52	1.42
026	0.67	1.96	1.43
033	0.87	2.18	1.72
040	1.05	2.60	2.70

* Maximum flow rate at an available pressure of 50 kPa (unit with hydronic module)
** Maximum flow rate at pressure drop of 100 kPa in the plate heat exchanger (unit without hydronic module).

30RB (cooling mode)

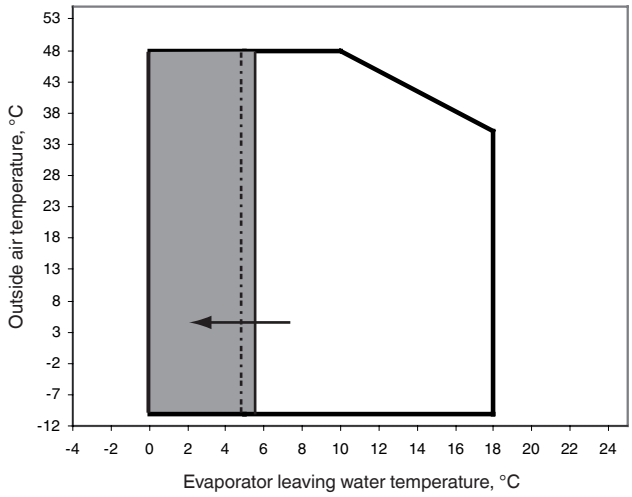

Operating range with anti-freeze solution and Pro-Dialog configuration.

Hydronic module

The hydronic module reduces the installation time. The unit is factory-equipped with the main hydronic components required for the installation: screen filter, water pump, expansion tank, safety valve and pressure gauge.

The water heat exchanger and the hydronic module are protected against frost down to -10°C, using an electric resistance heater (standard) and pump cycling.

The hydronic module is integrated into the unit without increasing its dimensions and saves the space normally used for the water pump.

Typical hydronic circuit diagram

17-21 kW

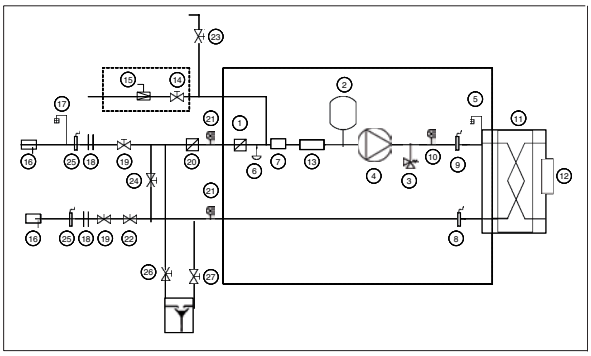

26-40 kW

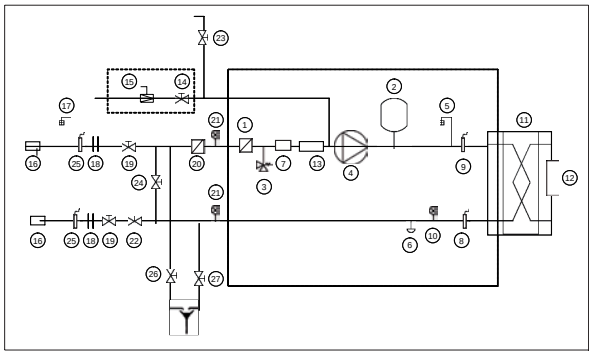

Hydronic module (unit with hydronic module)
Automatic water fill system option

Legend

Components of the unit and hydronic module

1. Screen filter
2. Expansion tank
3. Safety valve
4. High-pressure pump
5. Air purge
6. Water drain valve
7. Flow sensor
8. Plate heat exchanger leaving temperature sensor
9. Plate heat exchanger entering temperature sensor
10. Pressure gauge
11. Plate heat exchanger
12. Heat exchanger frost protection heater
13. Pipe frost protection heater
14. Shut-off valve (automatic water fill option)
15. Pressure reducer (automatic water fill option)

System components

16. Temperature sensor well
17. Air purge
18. Flexible connections
19. Shut-off valve
20. Screen fiter (obligatory for a unit without hydronic module)
21. Pressure gauge
22. Flow control valve (factory-supplied for field installation)
23. Charge valve
24. Frost protection bypass (when shut-off valves are closed in winter)
25. Pressure sensor
26. System drain valves
27. Plate heat exchanger drain valve

Available static system pressure

30RB 017-040

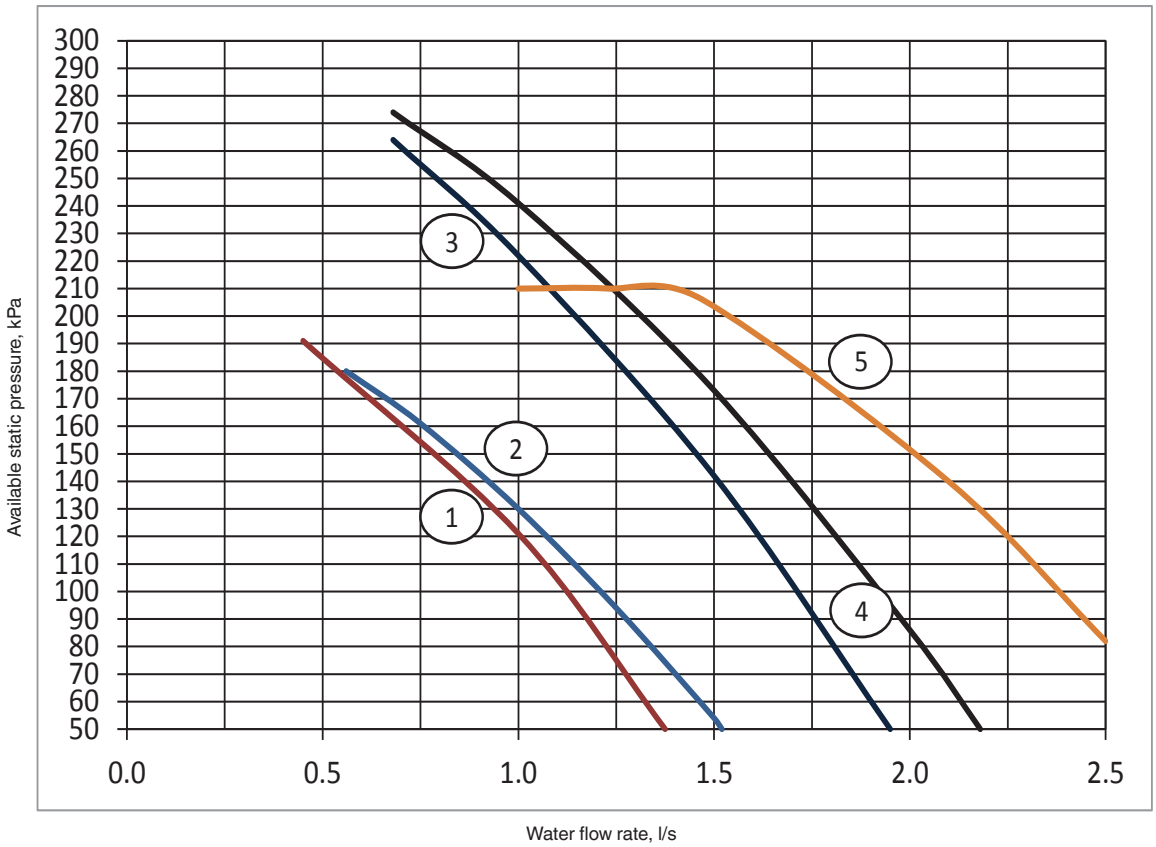

Legend
1. 30RB 017
2. 30RB 021
3. 30RB 026
4. 30RB 033
5. 30RB 040

Dimensions/clearances

30RB 017-021

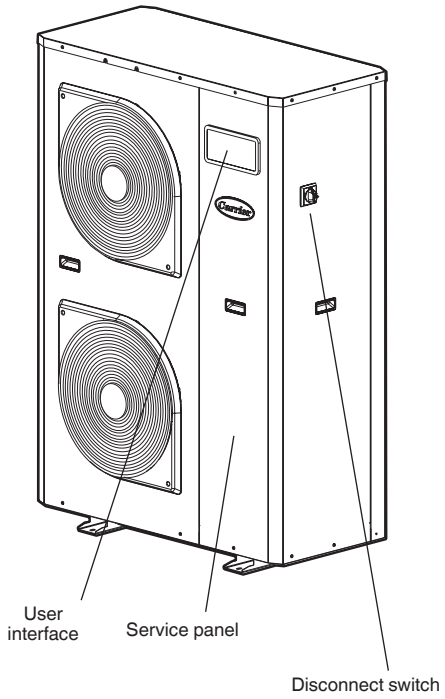

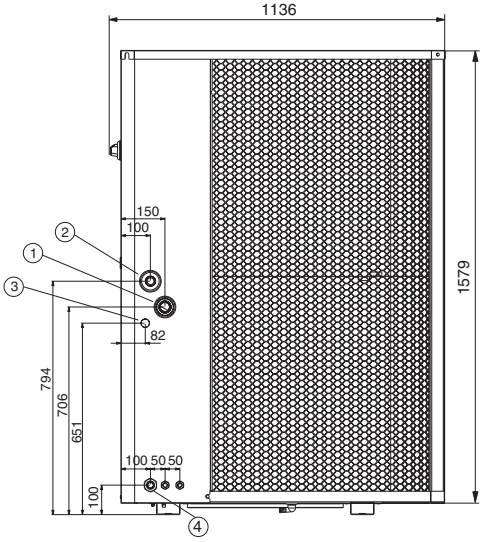

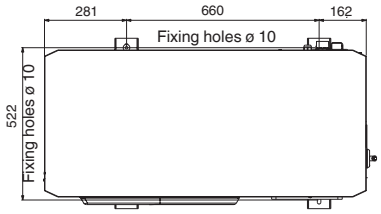

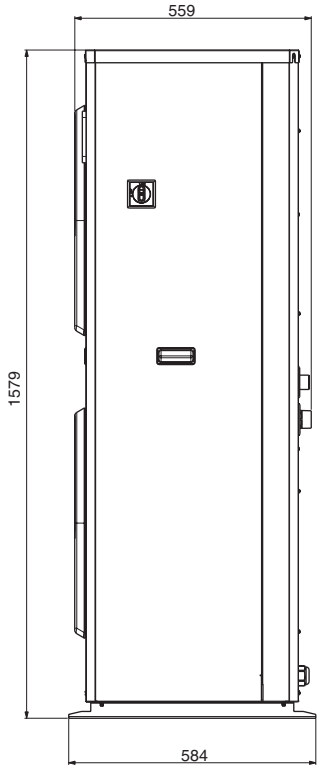

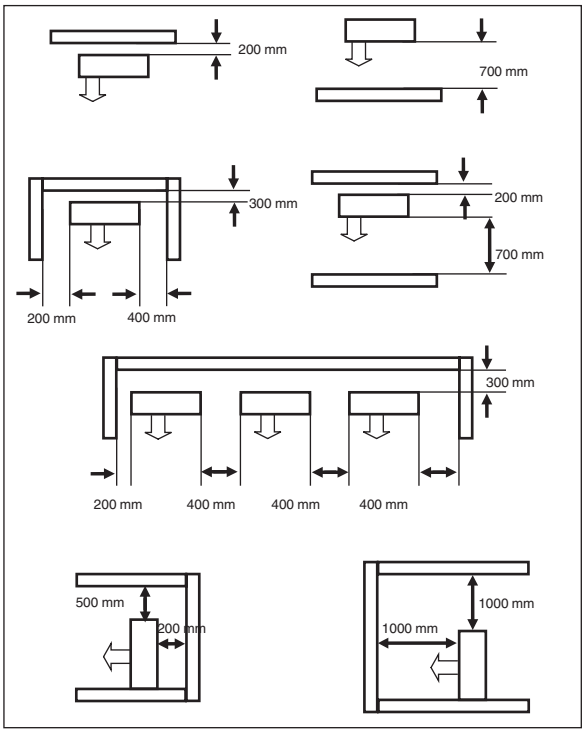

Legend
All dimensions are in mm
1. Water inlet
2. Water outlet
3. Water fill kit connection (option)
4. Power connections

Dimensions/clearances

30RB 026-040

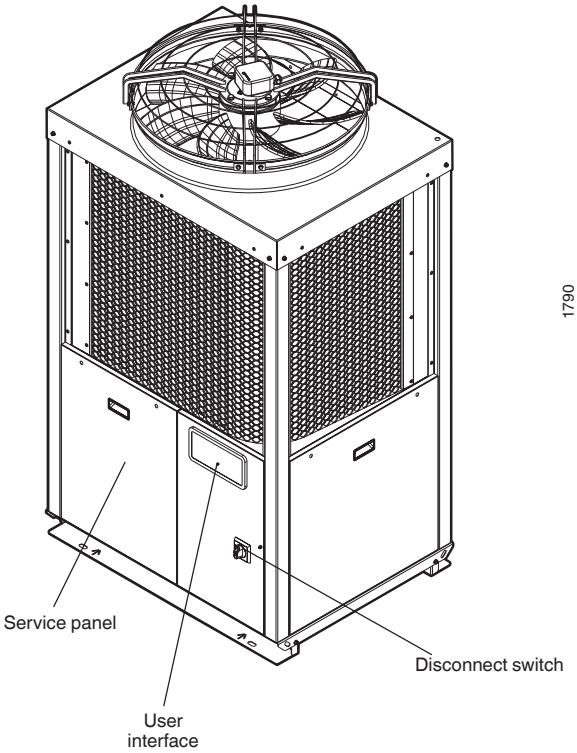

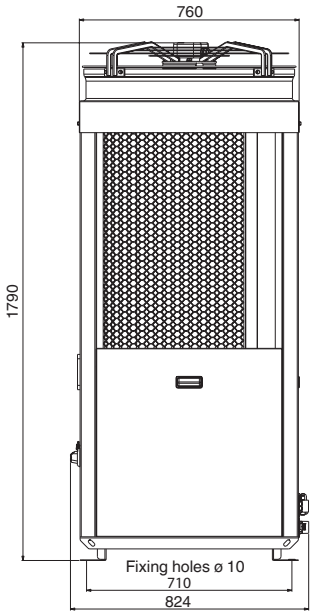

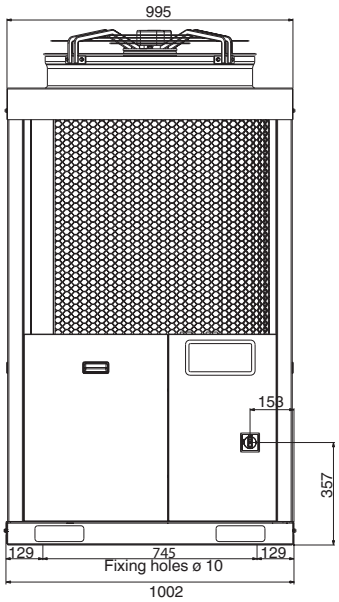

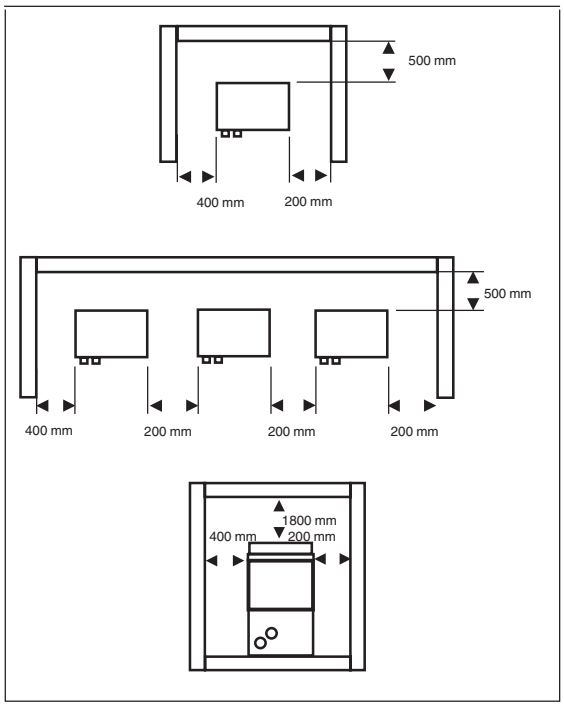

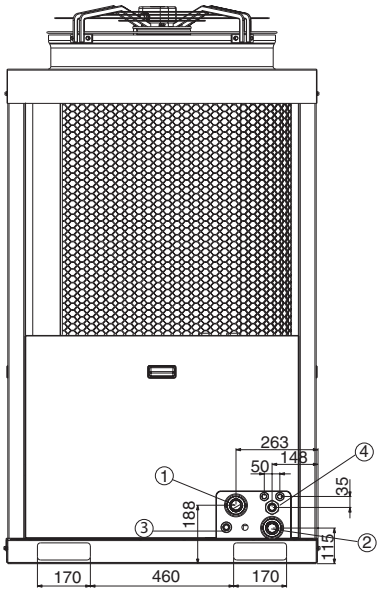

Legend
All dimensions are in mm
1. Water inlet
2. Water outlet
3. Water fill kit connection (option)
4. Power connections

30RBV 017-021 NEW

Nominal cooling capacity 15-18 kW

COOLING

greenspeed AQUASNAP

Easy and fast installation

Hydronic module available

Inverter technology

Superior reliability

The AquaSnap Greenspeed liquid chiller/heat pump range was designed for commercial applications such as the air conditioning of offices, hotels and large residential houses.

The units integrate the latest technological innovations:
Non-ozone depleting refrigerant R410A, DC inverter twin-rotary compressors, low-noise variable speed fans and microprocessor control.

With exceptional energy efficiency values the inverter chillers qualify for local tax reductions and incentive plans in all EU countries.

For added flexibility the AquaSnap Greenspeed units are available with or without hydraulic module integrated into the unit chassis, limiting the installation to straightforward operations like connection of the power supply and the water supply and return piping.

Physical data

30RBV				17	21
Cooling					
Standard unit	C1	Nominal capacity	kW	15,6	18,6
Full load performances*	C1	EER	kW/kW	3,3	3,1
	C1	Eurovent class cooling		A	A
	C2	Nominal capacity	kW	21,6	25,5
	C2	EER	kW/kW	4,0	3,9
	C2	Eurovent class cooling		A	A
Seasonal efficiency		ESEER		4,48	4,56
Sound levels					
Standard unit					
Sound power level (2)			dB(A)	71	74
Sound pressure level at 10 m (3)			dB(A)	40	43
Dimensions - Standard unit					
Length (5)			mm	1109	1109
Width			mm	584	584
Height			mm	1579	1579
Operating Weight (1)					
Standard unit			kg	168,9	176,9
Compressors			Rotary compressor	1	1
Refrigerant			R410A		
Charge (1)			kg	6,25	6,25
Capacity control					
Minimum capacity (6)			%	33%	41%
Condenser			Grooved copper tubes, aluminium fins		
Fans - Standard unit			Axial type fan		
Quantity				2	2
Maximum total air flow			l/s	2000	2400
Maximum rotational speed			rps	14	16
Evaporator			Brazed plate heat exchanger		
Water volume			l	1,52	1,9
Max water-side operating pressure without hydronic module			kPa	1000	1000
Hydronic module (option)			Pump, relief valve, paddle flow switch, expansion tank (option)		
Pump			Centrifugal pump (fixed speed or variable speed)		
Expansion tank volume			l	8	8
Max. water-side operating pressure with hydronic module (4)			kPa	300	300
Water connections (Without Hydronic Module)					
Inlet diameter (BSP GAS)			inch	1	1
Outlet diameter (BSP GAS)			inch	1	1
Water connections (With Hydronic Module)					
Inlet diameter (BSP GAS)			inch	1-1/4	1-1/4
Outlet diameter (BSP GAS)			inch	1	1
Water Filling System (Option 287)					
Diameter (BSP GAS)			inch	1/2	1/2
Chassis paint colour			Colour code:	RAL 7035	RAL 7035

* In accordance with standard EN 14511-3:2013
C1 Cooling mode conditions : evaporator water entering/leaving temperature 12°C/7°C, outside air temperature 35°C, evaporator fooling factor 0m² K/W
C2 Cooling mode conditions : evaporator water entering/leaving temperature 23°C/18°C, outside air temperature 35°C, evaporator fooling factor 0m² K/W
(1) Values are guidelines only. Refer to the unit nameplate.
(2) In dB ref=10-12 W, (A) weighting. Declared dualnumber noise emission values in accordance with ISO 4871 (with an associated uncertainty of +/-3dB(A)). Measured in accordance with ISO 9614-1 and certified by Eurovent.
(3) In dB ref 20 µPa, (A) weighting. Declared dualnumber noise emission values in accordance with ISO 4871 (with an associated uncertainty of +/-3dB(A)). For information, calculated from the sound power level Lw(A).
(4) Min. water-side operating pressure with fixed speed hydronic module is 50 kPa and with variable speed hydronic module is 40 kPa.
(5) Length = 1141 mm if main disconnect switch
(6) Cooling Eurovent condition

PRELIMINARY DATA

Type key

30R B V 021 C H E - B B - - -

Range

B - Cooling
Q - Heat pump

V - Variable speed

017 - nominal size 17 kW
021 - nominal size 21 kW

T - Power supply with neutral cable w/o disconnect switch
C - Power supply with neutral with disconnect switch

X - Without hydronic module
H - With hydronic module with expansion tank
F - With hydronic module with expansion tank and water filling system
R - With hydronic and without expansion tank*
Z - With hydronic, w/o expansion tank and with water filling system
M - With variable speed circulator with expansion tank
N - With variable speed circulator with expansion tank and water filling system
P - With variable speed circulator without expansion tank
Q - With variable speed circulator, w/o expansion tank and with water filling system

Revision status

- Standard
B - Local Interface WUI

B - CCN Jbus gateway as standard
C - CCN Bacnet gateway
D - CCN LONtalk gateway

- Standard

- Without coil protection
E - Epoxy coil protection (Gold-fin)

Accessories
- Remote User Interface (00PSG002521900A)
- DHW sensor (00PSG002501300A)
- Master /slave sensor (00PSG000596400A)
- Additional OAT sensor (00PSG002522000A)

Hydronic module

The hydronic module reduces the installation time. The unit is factory-equipped with the main hydronic components required for the installation: screen filter, water pump, expansion tank and relief valve.
The water heat exchanger and the hydronic module are protected against frost down to -20°C, using an electric resistance heater (standard) and pump cycling. However, the use of MPG (Mono Propylene Glycol) can effectively protect the installation even in case of power failure
The hydronic module is integrated into the unit without increasing its dimensions and saves the space normally used for the water pump.
2 Hydronics modules are available in option :

- With fixed speed pump
- With Variable speed circulator

Physical and electrical data

These are the same as for the standard unit except:

30 RBV - units with hydronic module		017/021 Fixed Speed	017/021 Variable Speed
Hydronic module			
Expansion tank volume	l	8	8
Maximum water-side operating pressure	kPa	300	300
Pumps			
Water pump	Pump, screen filter, expansion tank, flow switch, relief valve		
Power input*	kW	0.82	0.31
Nominal operating current draw*	A	1.60	1.57

* Nominal conditions: evaporator entering/leaving water temperature 12°C/7°C, outside air temperature 35°C, evaporator fouling factor = 0 m^2 K/kW.
Gross performances, not in accordance with EN14511-3:2013. These performances do not take into account the correction for the proportional heating capacity and power input generated by the water pump to overcome the internal pressure drop in the heat exchanger.

Typical hydronic circuit diagram

With the hydronic module 17-21 kW

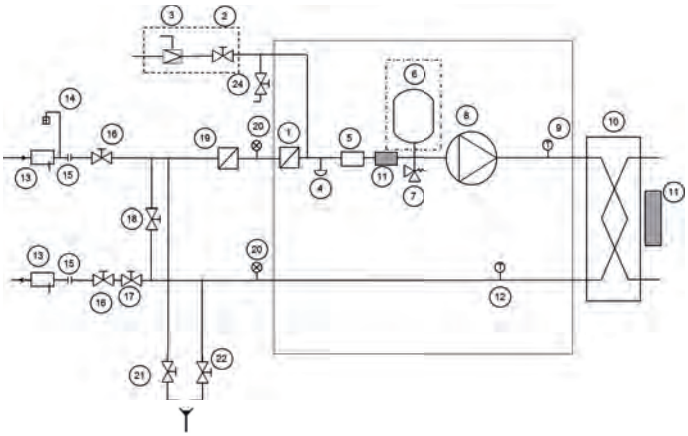

Without the hydronic module 17-21 kW

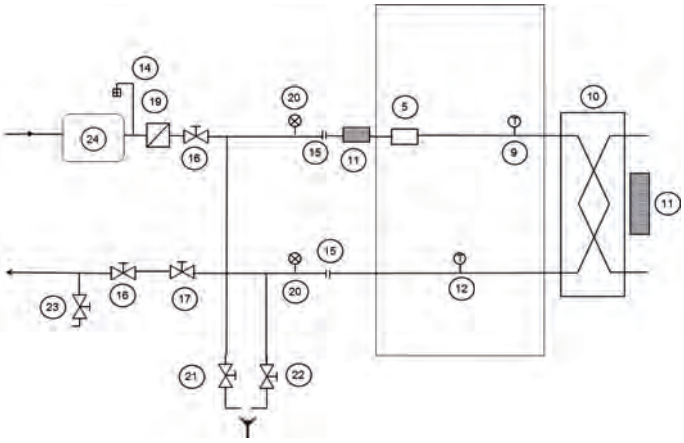

Components provided with unit
Water filling system (option)
Expansion tank (option)

Legend

Hydronic components
1. Mesh filter
2. On/off valve (water filling - optional)
3. Pressure reducer (water filling - optional)
4. Water drain valve
5. Paddle flow switch
6. Expansion tank
7. Safety valve
8. Pump
9. Temperature sensor
10. Brazed Plate Heat Exchanger
11. Anti-freeze electric heater
12. Temperature sensor

System components
13. Pocket for temperature sensor
14. Air purge
15. Flexible connections
16. On/off valve
17. Water flow control valve (factory supplied only with hydronic module option but to be installed on site)
18. Bypass valve for anti-freeze protection (when, in winter, on/off valve are closed)
19. Mesh filter (mandatory for a unit without hydronic kit)
20. Pressure gauge
21. Water drain valve from the plant
22. Water drain valve from refrigerant – water exchanger
23. Charge valve
24. Buffer tank (if required)

Features and advantages

Features

The AquaSnap Greenspeed heat pump systems can be used with a wide choice of Carrier terminal fan coil units - cassettes, low, medium and high-pressure satellite units, console units, underceiling units and high-wall units.

Ecodesign is the European Directive that sets mandatory requirements for Energy related Products (ErP) to improve their energy efficiency. Carrier supports initiatives to reduce the environmental impact of its products.

Quiet operation

- Compressors
  - Low-noise INVERTER Twin rotary compressor with low vibration levels
  - Advanced technology providing maximum energy-efficiency with high capacity available at peak conditions and optimised efficiency at low and mid compressor speeds. The AquaSnap Greenspeed heat pump DC inverter uses Intelligent Power Drive Unit (IPDU) hybrid inverter technology. An electronic management logic is used to optimised compressor opartion in all conditions, minimised temperature fluctuation to give a perfect individual comfort control with significant reduction of energy comsuption :
    - PWM: pulse width modulation of the direct current controls the compressor at partial load conditions, adjusting the frequency at fixed voltage.
      The compressor speed is fine-tuned and the system provides high-level comfort (no temperature fluctuations) at exceptionally efficient working conditions.

Compressor frequency is increased continuously up to the maximum level. This ensures that there are no current draw peaks in the start-up phase. Inverter ramp-up speed makes soft starts unnecessary and ensures immediate maximum power.

- The two rotary compression cylinders, offset from each other by 180°, and the DC brushless motor with the shaft in perfect balance ensure reduced vibration and noise, even at very low operating speeds. This results in an extremely wide range between minimum and maximum capacity with continuous operation, guaranteeing that the system is always optimised and provides maximum comfort at exceptionally high efficiency levels.
- Twin-rotary cylinders, low vibrations and low load to the shaft ensure highest compressor reliability and a long trouble-free operating life.
- All DC brushless twin-rotary compressors are equipped with internal system to secure the motor against oil issues due to colder climate.
- A double compressor shield for acoustic insulation further reduces noise levels.

- Air heat exchanger section
  - Vertical air heat exchanger coils
  - The latest-generation low-noise fans are now even quieter and do not generate intrusive low-frequency noise
  - Rigid fan installation for reduced start-up noise.

Easy and fast installation

- Integrated hydronic module (option)
  - Fixed speed water pump or variable speed circulator
  - Water filter protecting the water pump against circulating debris
  - High-capacity membrane expansion tank ensures pressurisation of the water circuit (option)
  - Overpressure valve, set to 3 bar
  - Thermal insulation and frost protection down to -20°C, using an electric resistance heater and pump cycling.
  - Integrated water fill system to ensure correct water pressure (option)

No additional buffer tank required, simplyfing and speeding up the installation process (to be checked with the water volume of installation).

- Physical features
  - Advanced circuit design and component selection has resulted in a compact unit with an exceptionally small footprint that is easy to transport even through narrow doors.
    Reduced operating weight and a handle on the unit panels to facilitate transport.
  - The unit is enclosed by easily removable panels, covering all components (except air heat exchanger and fans).
- A neutral color (RAL 7035) to facilitate the intregration in residential area
- Simplified electrical connections
  - Main disconnect switch with high trip capacity (option)
  - Transformer for safe 24 V control circuit supply included
- Fast commissioning
  - Systematic factory operation test before shipment
  - Quick-test function for step-by-step verification of the instruments, electrical components and motors.

Economical seasonal operation

- Increased seasonal efficiency
  - In accordance with EN 14825:2013, Average Climate, energy label reach A+ (see Physical data RQV units). The exceptionally high energy efficiency of the AquaSnap Greenspeed unit is the result of a long qualification and optimisation process.
- Reduced maintenance costs
  - Maintenance-free twin rotary compressors
  - Fast diagnosis of possible incidents and their history via the user interface WUI
  - R410A refrigerant is easier to use than other refrigerant blends

Environmental care

- Non-ozone depleting R410A refrigerant
  - Chlorine-free refrigerant of the HFC group with zero ozone depletion potential
  - Very efficient - gives an increased energy efficiency ratio (EER)
- Leak-tight refrigerant circuit
  - Brazed refrigerant connections for increased leaktightness
  - Verification of pressure transducers and temperature sensors without transferring refrigerant charge

Superior reliability

- State-of-the-art concept
  - Cooperation with specialist laboratories and use of limit simulation tools (finite element calculations) for the design of the critical components, e.g. motor supports, suction/discharge piping etc.
- Auto-adaptive control
  - Control algorithm prevents excessive compressor cycling and permits reduction of the water quantity in the hydronic circuit (Carrier patent)
- Exceptional endurance tests
  - Corrosion resistance tests in salt mist in the laboratory
  - Accelerated ageing test on components that are submitted to continuous operation: compressor piping, fan supports
  - Transport simulation test in the laboratory on a vibrating table.

Controls

NHC Control

NHC control associate with compressor and fan variable frequency driver combines intelligence with operating simplicity. The control constantly monitors all machine parameters and precisely manages the operation of compressor, expansion devices, fans and of the water heat exchanger water pump for optimum energy efficiency.

- Ease-of-use
  - NHC control can be associated with a new User interface (WUI) which allow an easy access to the configuration parameters (frequency compressor, refrigerant circuit temperature, sets points, air temp, entering water temp, alarm report…).

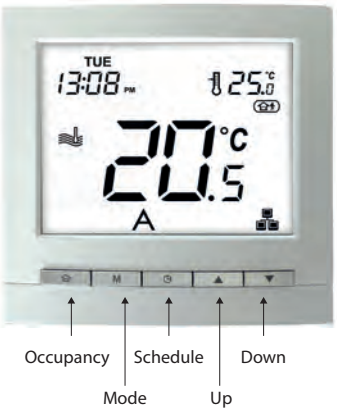

  - This user interface is also very intuitive in its use. It allows reading and easy selection of the operating mode. The functions are represented by icons on the LCD backlit screen.
  - To facilitate the use of this interface, 3 levels of access are available: end user, installer and factory.
- Key features
  - Heating and cooling mode
  - Domestic hot water
  - Master/slave control of 4 units operating in parallel with operating time equalisation and automatic changeover in case of a unit fault (need Master slave sensor in accessory).
  - Scheduling period
- Choice of control product
  - 3 options are available to drive the 30RBV 17-21:
    - Remote contact
    - User interface WUI
    - ModBus protocol

User Interface WUI

  - This interface can be installed up to 50 m away. It is connected to the NHC board with a 4 wires cable.
  - 2 installation possibilities:
    - Inside the room (with remote interface accessory) : IAT sensor is an accessory, it is not mandatory to operate in remote user interface, because WUI has an internal sensor to measure the room temperature take with the internal sensor, setpoint selected is air temperature.
    - On the chiller (with local user interface option) : setpoint is on water temperature are water temperature

- ModBus
  - Direct access with Modbus connection to set, configure and
  - monitor the 30 RBV/RQV
- Input remote contact :
  - Remote On/Off Contact
  - Remote Heat/Cool Contact: This switch is used to select the Cooling Mode (contact opened) or the Heating Mode (contact closed).
  - Remote Economic Contact: This switch is used to select the regular Home Mode when contact is opened or the Economic Away Mode when contact is closed.
  - Safety Input Contact: This switch is normally closed type, according to configuration it is used either to stop the unit, to ban the Heating Mode or to ban the Cooling Mode when contact is opened.
- Large choice of Input Contacts

Several functions can be configured by the installer. They allow to adapt to the environment of the machine:

- Power Limitation / Night Mode: This switch is used to reduce the compressor maximum frequency to avoid noise.
- Off Peak: If the General Purpose Contact, configured to “Off Peak”, is closed then the Electric Heat Stages are not allowed.
- Loadshed Request: If the General Purpose Contact, configured to “Loadshed Request”, is closed then unit shall be stopped as soon as possible.

Solar Input: If the General Purpose Contact, configured to “Solar Input”, is closed then the unit is not allowed to run in Heating or DHW Mode because hot water is produced from a solar source.

- DHW Request Switch from tank : When this input is closed, the Domestic Hot Water production is requested (need DHW sensor delivered in accessory).
- DHW Priority : When this input is closed, the unit is switching to Domestic Hot Water production regardless of the Space Heating demand and the current DHW schedule (need DHW sensor delivered in accessory).
- Anti-Legionella Cycle Request : When this input is closed, the Domestic Hot Water production is requested with the Anti-Legionella setpoint.
- Summer Switch : This switch is used to select the Winter (contact opened) or the Summer Mode (contact closed).
- Energy Meter Input : This input is used to count the number of pulses received from an external energy meter (not supplied)
- External Alarm Indication Input : When this input is opened, alarm is tripped. This alarm is for information only, it does not affect the unit operation.

- Output remote contact available

2 Output contacts could be chosen on the NHC board, upon configuration for the following purposes:

alert, alarm , Standby, running (Cool), IAT Reached.

Operating limits

Evaporator Water Temperature	°C	Minimum	Maximum
Entering water temperature at start-up		6(1)	30
Leaving water temperature during operation		5(1)	18
Condenser Air Temperature	**°C**	**Minimum**	**Maximum**
Standard unit		-10(2)	46

(1) Minimum leaving water temperature of 7°C and minimum entering water temperature of 7.5°C for air temperature of -10°C to 0°C for 30RBV 17-21
(2) For operation at an outdoor ambient temperature below 0°C (cooling mode and heating mode), the water freeze protection should be available and / or the water loop can be protected against frost by the installer, using an anti-freeze solution.

Operating range 30RQV 17-21 units

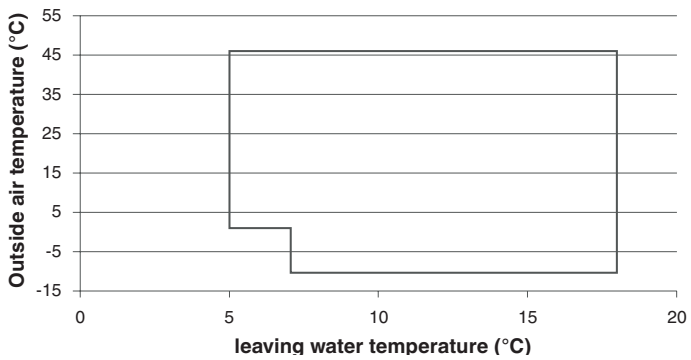

Available static system pressure

Available external static pressure for unit with fixed speed hydronic module 17 and 21kW

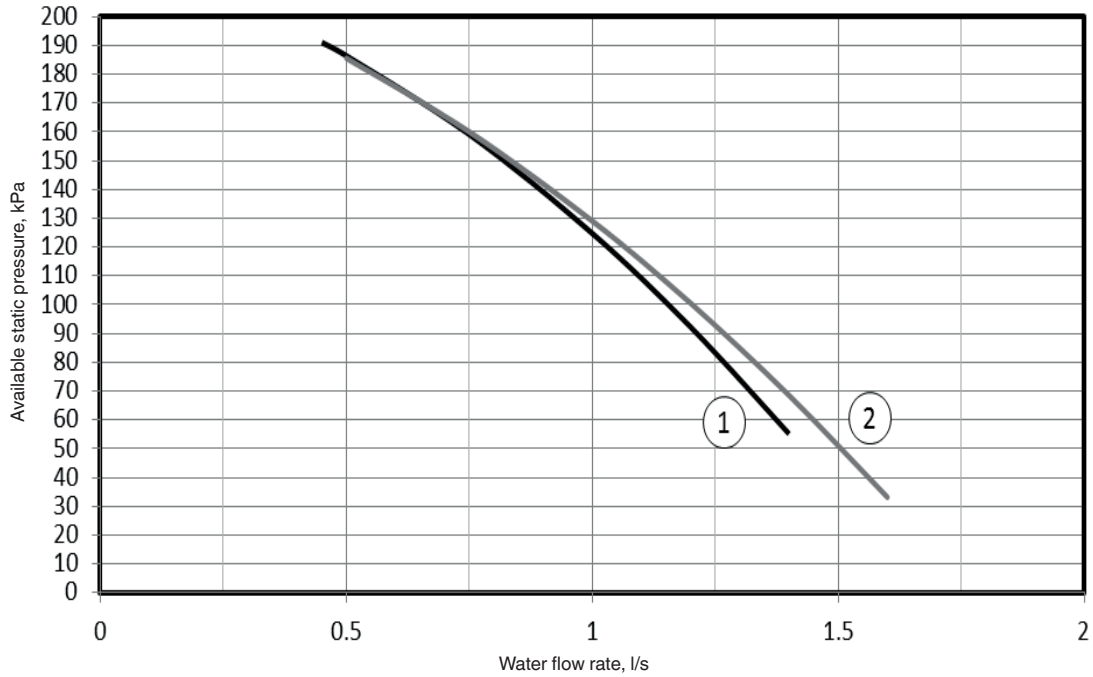

Legend
1. 30RBV 17
2. 30RBV 21

Available external static pressure for 17kW unit with variable speed hydronic module

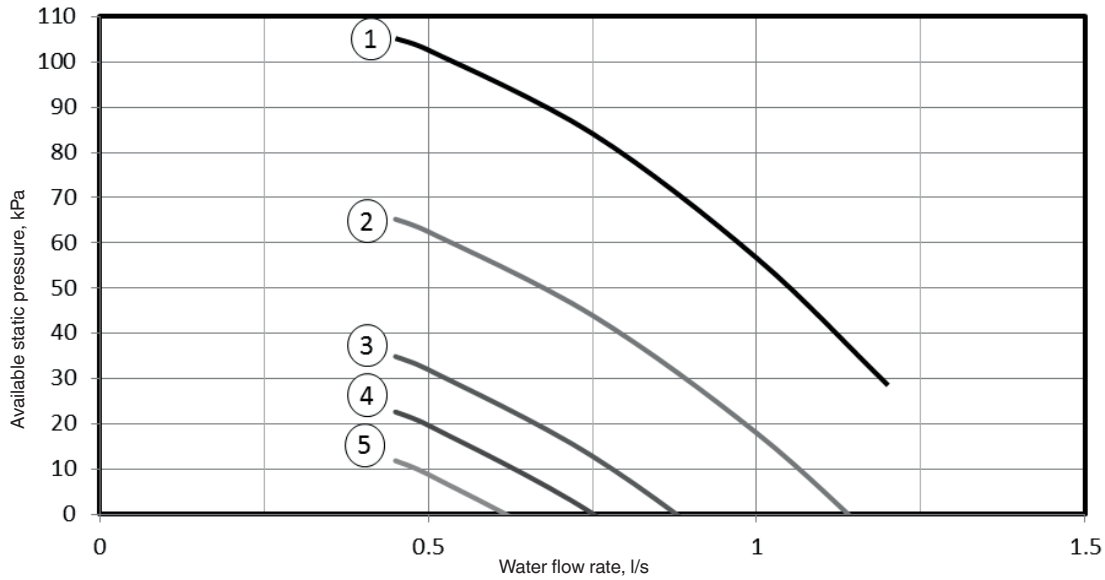

Legend
1. Pump Speed = 100%
2. Pump Speed = 75%
3. Pump Speed = 50%
4. Pump Speed = 38%
5. Pump Speed = 25%

Available static system pressure

Available external static pressure for 21kW unit with variable speed hydronic module

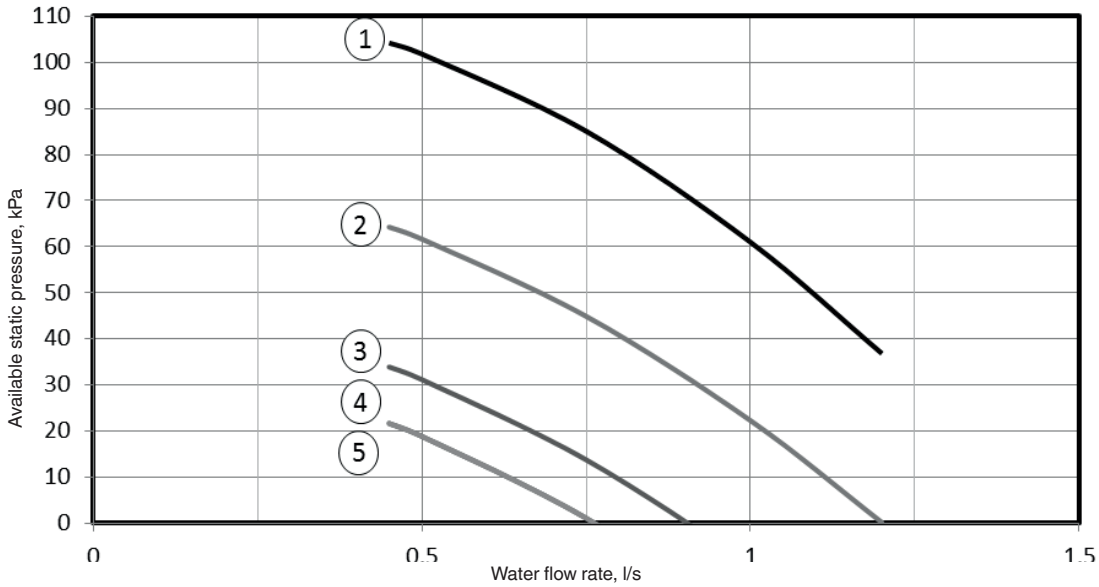

Legend
1. Pump Speed = 100%
2. Pump Speed = 75%
3. Pump Speed = 50%
4. Pump Speed = 38%
5. Pump Speed = 25%

BPHE water flow rate

30RBV units without hydronic module		
	Minimum water flow rate, l/s	Maximum water flow rate, l/s
17	0,45	1,3
21	0,57	1,5

30RBV units with fixed speed hydronic module		
	Minimum water flow rate, l/s	Maximum water flow rate, l/s
17	0,45	1,4
21	0,57	1,6

30RBV units with variable speed hydronic module		
	Minimum water flow rate, l/s	Maximum water flow rate, l/s
17	0,45	1,2
21	0,57	1,2

Dimensions/clearances

30RBV 017-021

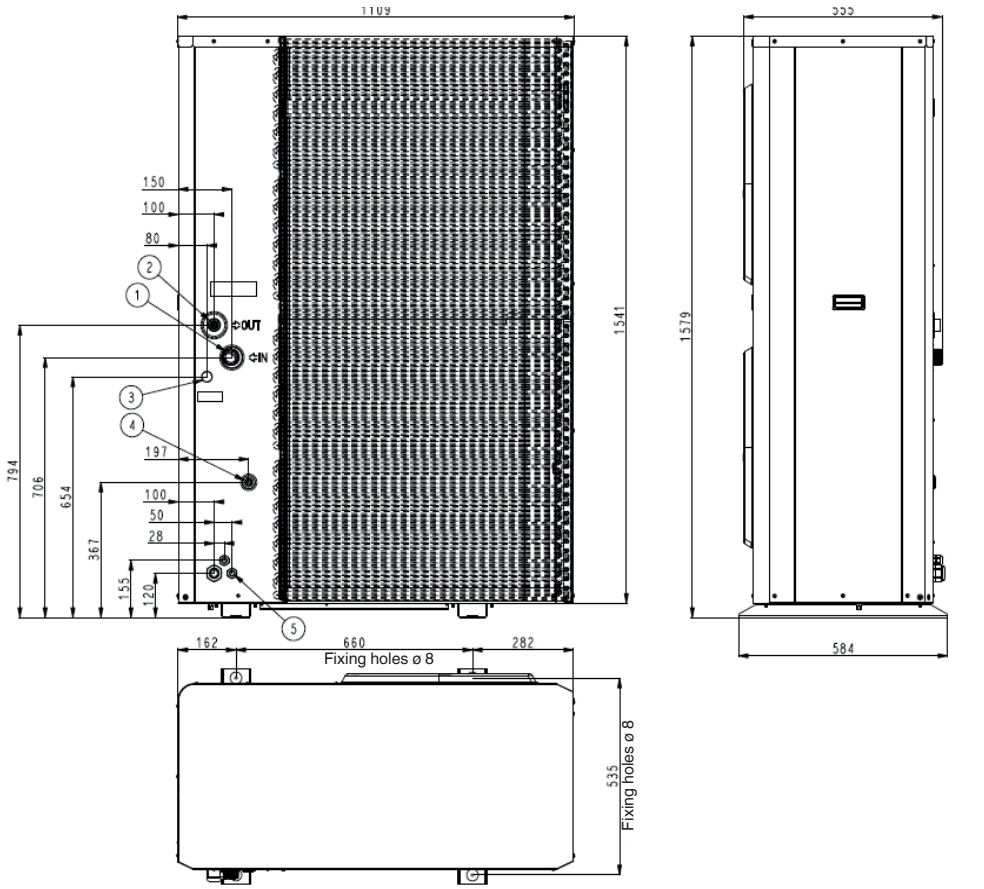

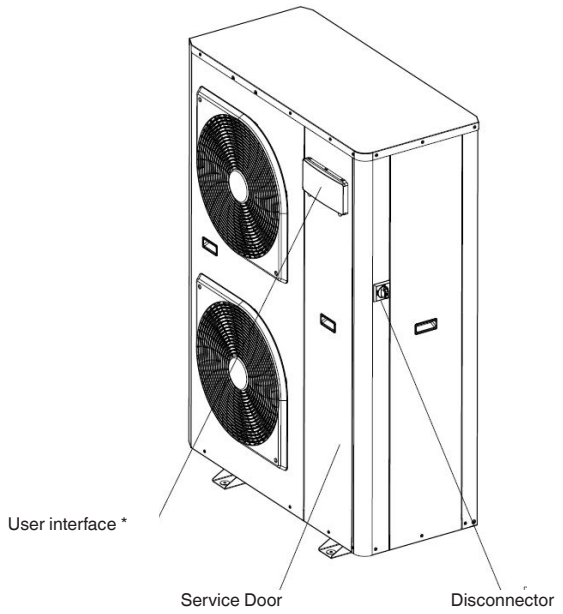

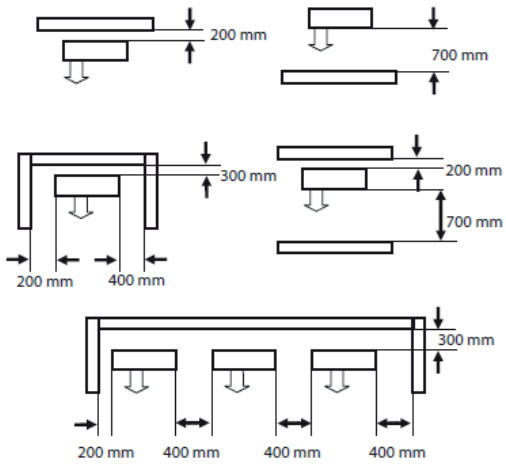

Legend
All dimensions are in mm
1. Water inlet
2. Water outlet
3. Fill kit connection
4. Safety valve outlet
5. Electrical connections

30RBY

Nominal cooling capacity 16-42 kW

AQUASNAP®

Five sizes with nominal cooling capacities from 16 to 42 kW.

AquaSnap liquid chillers for commercial applications such as the air conditioning of offices and hotels.

Exceptionally high energy efficiency at part load - Eurovent energy efficiency class A and B (in accordance with EN14511-3: 2013).

Latest technological innovations integrated: Non-ozone depleting refrigerant R410A, scroll compressors, low-noise fans and auto-adaptive microprocessor control.

The units are equipped with a hydronic module integrated into the unit chassis, limiting the installation to straight-forward operations like connection of the power supply, the water supply and return piping and the air distribution ducting.

Physical data

30RBY				017	021	026	033	040
Cooling								
Full load performances*	C1	Nominal capacity	kW	15.7	20.3	27.0	32.3	41.9
	C1	EER	kW/kW	2.52	2.52	2.72	2.9	2.78
	C1	Eurovent Energy Class		B	B	A	A	A
	C2	Nominal capacity	kW	19.9	24.8	36.1	42.3	50.6
	C2	EER	kW/kW	2.95	2.78	3.30	3.48	3.83
Seasonal Efficiency*		ESEER	kW/kW	2.78	2.77	2.97	3.15	2.98
Sound Power Level Standard Unit (Radiated) ESP = 80 Pa			dB(A)	80.0	80.0	91.0	91.0	91.0
Sound Power Level Standard Unit + Option 15								
Operating weight†								
Standard unit (with hydronic module)			kg	207	226	253	278	290
Standard unit (without hydronic module)			kg	193	213	237	262	273
Refrigerant				R-410A				
Compressor				One scroll compressor				
Control				Pro-Dialog+				
Fans				Two twin-speed centrifugal fans, 5 backward-curved blades				
Air flow			l/s	1640	1640	3472	3472	3472
Evaporator				One plate heat exchanger				
Condenser				Copper tubes and aluminium fins				
Unit with hydronic module pump				One single-speed pump, screen filter, expansion tank, flow switch, water circuit drain valve, pressure gauge, automatic air purge valve, safety valve				
Entering water connection			in	1-1/4	1-1/4	1-1/4	1-1/4	1-1/4
Leaving water connection			in	1	1	1-1/4	1-1/4	1-1/4
Nominal operating current			A	1.30	1.4	2.4	2.6	2.8
Dimensions								
Length			mm	1136	1136	1002	1002	1002
Depth			mm	584	584	824	824	824
Height			mm	1608	1608	1829	1829	1829

C1 Cooling mode conditions: Water heat exchanger, entering/leaving temperature 12°C/7°C, fouling factor 0 m² K/W. Outside air temperature 35°C
C2 Cooling mode conditions::Water heat exchanger, entering/leaving temperature 23°C/18°C, fouling factor 0 m² K/W. Outside air temperature 35°C
* In accordance with standard EN14511-3:2013
† Weight shown is a guideline only.

Eurovent certified data

Electrical data

30RBY		017	021	026	033	040
Power circuit						
Nominal power supply	V-ph-Hz	400-3-50 ± 10%				
Control circuit supply		24 V via internal transformer				
Maximum start-up current (Un)*	A	75	95	118	118	176
Maximum operating power input**	kW	7.8	9.1	11	13.8	17.5
Maximum operating current draw***	A	13	16	20	24	30

* Maximum instantaneous start-up current (locked rotor current of the compressor).
** Power input, compressors and fans, at the unit operating limits (saturated suction temperature 10°C, saturated condensing temperature 65°C) and nominal voltage of 400 V (data given on the unit nameplate).
*** Maximum unit operating current at maximum unit power input and 400 V (values given on the unit nameplate).

Note: Units 30RB 602-802 have two electrical connection points.

Options/accessories

- Hydronic module (option)
- Integrated water fill system (option/accessory)
- Inlet duct frame (option)
- Inlet filter frame (option)
- JBus, BacNet and LonTalk gateways (accessory)
- Remote interface (accessory)
- Condensate drain pan (accessory)

Hydronic module, sizes 026-040

Features and advantages

Features

- Five sizes with nominal cooling capacities from 16 to 42 kW.
- AquaSnap liquid chillers for commercial applications such as the air conditioning of offices and hotels.
- Exceptionally high energy efficiency at part load - Eurovent energy efficiency class A and B (in accordance with EN14511-3: 2013).
- Latest technological innovations integrated: Non-ozone depleting refrigerant R410A, scroll compressors, low-noise fans and auto-adaptive microprocessor control.
- The units are equipped with a hydronic module integrated into the unit chassis, limiting the installation to straight-forward operations like connection of the power supply, the water supply and return piping and the air distribution ducting.
- Low-noise scroll compressors with low vibration level.
- Vertical condenser coils with protection grilles on anti-vibration mountings.
- Low-noise fans, now even quieter. Rigid fan installation for reduced start-up noise.
- Easy duct connection and fans with 80 Pa available pressure.
- The unit has a small footprint and is enclosed by easily removable panels.
- Simplified electrical connections.
- Systematic operation test before shipment and quick-test function for step-by-step verification of the instruments, electrical components and motors.
- Maintenance-free scroll compressors and fast diagnosis of possible incidents and their history via the Pro-Dialog+ control reduce maintenance costs.
- Leak-tight refrigerant circuit.
- Corrosion resistance tests, accelerated ageing test on compressor piping and fan supports and transport simulation test on a vibrating table in the laboratory.

Controls

Pro-Dialog+ operator interface

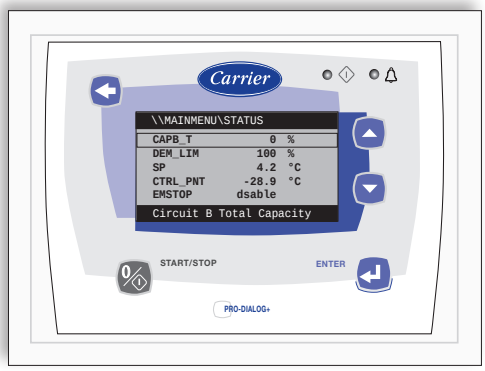

Operating limits

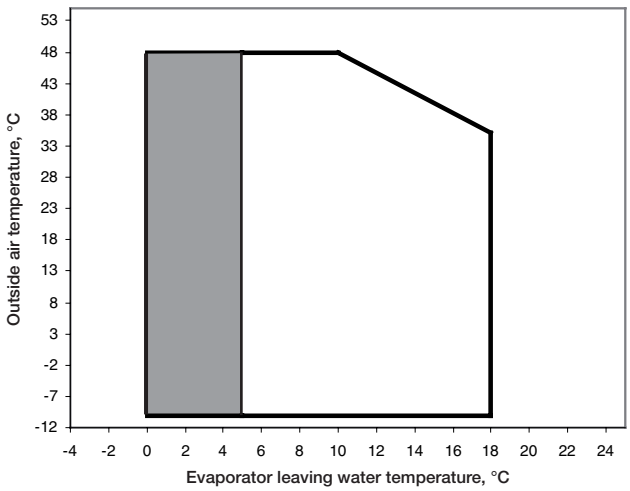

Operating range with anti-freeze solution and Pro-Dialog configuration.

30PA / PAC

NEW

Nominal cooling capacity 17-36kW

COOLING

AQUASNAP®

Packaged unit all in one

High efficiency

Silent operation

Configuration flexibility

Ductable feature for indoor installation

The 30PA cooling only are compact outdoor air/water units. Available in two versions: STD (Standard) and HEE (High Energy Efficiency).

These units have been made for operation indoors in the production of cold water, applicable to cooling and industry.

They are equipped with centrifugal fan (STD version) or electronic plug-fan (HEE version), plate exchanger, hermetic scroll compressor, and electronic control with microprocessor, components optimised for the R-410A refrigerant.

This range is also offered with an integrated circulation pump: 30 PAC.

The entire range also has the option to include a desuperheater circuit that allows for the production of hot water at a temperature greater than in the condensation circuits.

All units are charged with refrigerant and are tested at the factory, verifying the correct operation of all their components.

EUROVENT CERTIFIED PERFORMANCE
www.eurovent-certification.com

CARRIER participates in the ECP programme for HE.
Check ongoing validity of certificate :
www.eurovent-certification.com

STD version: Technical characteristics

30PA				90STD	100STD	120STD	160STD	180STD
Cooling								
Cooling capacities	Net cooling capacity *		kW	17,00	21,10	25,20	32,70	36,00
	Net power input **		kW	7,75	9,15	10,00	12,60	14,40
	Net efficiency	**EER**		2,29	2,31	2,51	2,60	2,49
	Seasonal efficiency	**ESEER *****		2,61	2,59	2,81	2,94	2,85
Outdoor circuit centrifugal-fan	Nominal air flow		(m^3/h)	6500	7000	10000	12200	12200
	Available static pressure		(mm.w.c)	20				
	Number / turbines			1				
	Motor output		kW	2,2	2,2	3,0	4,0	4,0
	Power input ****		kW	1,46	1,77	2,33	2,83	2,83
	Speed		(r.p.m.)	973	1027	837	734	734
Indoor circuit	Nominal water flow		(m^3/h)	3,1	3,7	4,3	5,7	6,2
	Pressure drop		(m.w.c)	2,3	3,2	2,9	4,7	2,9
	Minimum water flow		(m^3/h)	2,2	2,7	3,1	4,1	4,3
	Maximum water flow		(m^3/h)	6,2	7,4	8,8	11,3	12,7
	Type of hydraulic connections			Gas threaded				
	Diameter of connections			1 1/4" M		1 1/2" M		
Compressor	Type			Scroll				
	Number of compressors / stages / circuits			1 / 1 / 1				
	Oil type			Copeland 3MAF 32 cST, Danfoss POE 160 SZ, ICI Emkarate RL 32 CF, Mobil EAL Artic 22 CC				
	Volume of oil		l	3,0	3,3	3,3	3,3	6,2
Refrigerant	Type			R-410A				
	Global warming potential (GWP) *****			2.088				
	Charge		kg	5,9	6,1	6,6	6,9	7,6
	Environment impact		(tCO_2e)	12,3	12,7	13,8	14,4	15,9
Electrical characteristics	Electrical power supply			400 V / III ph / 50 Hz (±10%)				
	Power supply			3 Wires + Ground + Neutral				
Maximum absorbed current	Compressor		A	15,2	17,3	20,5	25,4	30,5
	Fan		A	5,0	5,0	6,9	8,9	8,9
	Control		A	0,9	0,9	0,9	0,9	0,9
	Total		A	21,1	23,2	28,3	35,2	40,3
Dimensions	Length		mm	1117		1398		
	Width		mm	860		860		
	Height		mm	1447		1727		
Weight	Empty		kg	302	310	372	390	388
	In operation		kg	306	315	379	397	396

30PAC			90STD	100STD	120STD	160STD	180STD
Cooling							
Seasonal efficiency	ESEER		2,95	3,00	3,22	3,17	3,02
Indoor circuit	Nominal water flow	(m^3/h)	3,2	3,7	4,5	5,4	6,2
	Pressure drop	(m.w.c)	2,3	3,1	2,5	3,5	4,6
Expansion vessel	Volume	l	12				
	Filled pressure	kg/cm^2	1,5				
Dimensions	Length	mm	1117	1398		2113	
	Width	mm	860	860		860	
	Height	mm	1447	1727		1447	
Weight	Empty	kg	310	370	386	469	476
	In operation	kg	327	390	408	497	503

* Cooling capacity calculated in accordance with the EN-14511-2013 standard given for outlet water temperature conditions of 7ºC and 35ºC outdoor temperature.
** Total power input by compressor, motorised fan and electronic control under nominal conditions, calculated in accordance with the EN-14511-2013 standard. Options are not included.
*** European Seasonal Energy Efficiency Ratio (ESEER) obtained in accordance with the calculation conditions established by the certification body EUROVENT.
**** Energy-efficient motors IE2.
***** Climatic warming potential of a kilogram of fluorinated greenhouse gas in relation to a kilogram of carbon dioxide over a period of 100 years.

HEE version: technical characteristics

30PA				90HEE	100HEE	120HEE	160HEE	180HEE
Cooling								
Cooling capacities	Net cooling capacity *		kW	18,40	21,00	25,50	31,40	35,70
	Net power input **		kW	7,20	7,95	9,10	11,50	13,60
	Net efficiency	**EER**		2,55	2,64	2,81	2,74	2,62
	Seasonal efficiency	**ESEER *****		2,89	2,99	3,20	3,14	3,03
Outdoor circuit plug-fan	Nominal air flow		(m^3/h)	6500	7000	10000	12200	14000
	Nominal available static pressure		(mm.w.c)	20				
	Maximum available static pressure		(mm.w.c)	63,7	70,3	45,6	65,1	62,7
	Number / diameter			1 / 500		1 / 560	2 / 560	
	Motor output		kW	2,7	2,8	3,0	2 x 3,0	
	Power input ****		kW	1,33	1,21	1,87	2,20	2,52
	Speed		(r.p.m.)	1700	1780	1500	1500	
Indoor circuit	Nominal water flow		(m^3/h)	3,2	3,7	4,5	5,4	6,2
	Pressure drop		(m.w.c)	1,6	2,1	1,6	2,4	3,1
	Minimum water flow		(m^3/h)	2,5	2,9	3,4	4,1	4,6
	Maximum water flow		(m^3/h)	6,6	7,4	9,1	11,3	12,8
	Type of hydraulic connections			Rosca gas				
	Diameter of connections			1 1/4" M		1 1/2" M		
Compressor	Type			Scroll				
	Number of compressors / stages / circuits			1				
	Oil type			Copeland 3MAF 32 cST, Danfoss POE 160 SZ, ICI Emkarate RL 32 CF, Mobil EAL Artic 22 CC				
	Volume of oil		l	3,0	3,3	3,3	3,3	6,2
Refrigerant	Type			R-410A				
	Global warming potential (GWP) *****			2.088				
	Charge		kg	6,0	6,3	6,8	8,9	9,2
	Environment impact		(tCO_2e)	12,5	13,2	14,2	18,6	19,2
Electrical characteristics	Electrical power supply			400 V / III ph / 50 Hz (±10%)				
	Power supply			3 Hilos + Tierra + Neutro				
Maximum absorbed current	Compressor		A	15,2	17,3	20,5	25,4	30,5
	Fan		A	4,2	4,3	4,6	9,2	9,2
	Control		A	0,9	0,9	0,9	0,9	0,9
	Total		A	20,3	22,5	26,0	35,5	40,6
Dimensions	Length		mm	1117	1398		2113	
	Width		mm	860	860		860	
	Height		mm	1447	1727		1447	
Weight	Empty		kg	294	351	368	450	455
	In operation		kg	298	358	376	465	468

30PAC			90HEE	100HEE	120HEE	160HEE	180HEE
Cooling							
Seasonal efficiency	ESEER		2,95	3,00	3,22	3,17	3,02
Indoor circuit	Nominal water flow	(m^3/h)	3,2	3,7	4,5	5,4	6,2
	Pressure drop	(m.w.c)	2,3	3,1	2,5	3,5	4,6
Expansion vessel	Volume	l	12				
	Filled pressure	kg/cm^2	1,5				
Dimensions	Length	mm	1117	1398		2113	
	Width	mm	860	860		860	
	Height	mm	1447	1727		1447	
Weight	Empty	kg	310	370	386	469	476
	In operation	kg	327	390	408	497	503

* Cooling capacity calculated in accordance with the EN-14511-2013 standard given for outlet water temperature conditions of 7ºC and 35ºC outdoor temperature.
** Total power input by compressor, motorised fan and electronic control under nominal conditions, calculated in accordance with the EN-14511-2013 standard. Options are not included.
*** European Seasonal Energy Efficiency Ratio (ESEER) obtained in accordance with the calculation conditions established by the certification body EUROVENT.
**** Energy-efficient motors IE2.
***** Climatic warming potential of a kilogram of fluorinated greenhouse gas in relation to a kilogram of carbon dioxide over a period of 100 years.

Options

■ Pumps

The pump installed in a unit 30PAC can be replaced for:

- High-pressure, monocellular, IP55, circulation pump that can operate with glycol water (mono-ethylene glycol).
- Low-pressure, monocellular, IP55, circulation pump that can operate with glycol water (mono-ethylene glycol) (except model 90).

■ Configuration

- Vertical air supply, M01 assembly (default horizontal supply, M00 assembly).
- In the STD version: Different configurations of available pressure from 7 to 35 mm.w.c.

■ Climatic conditions

- In units with the **STD version** that work in cooling with an outdoor temperature lower than 12ºC, the condensation pressure control allowing an "all seasons" operation (up to -15ºC) is mandatory. This is performed per motorized damper in the fan outlet.

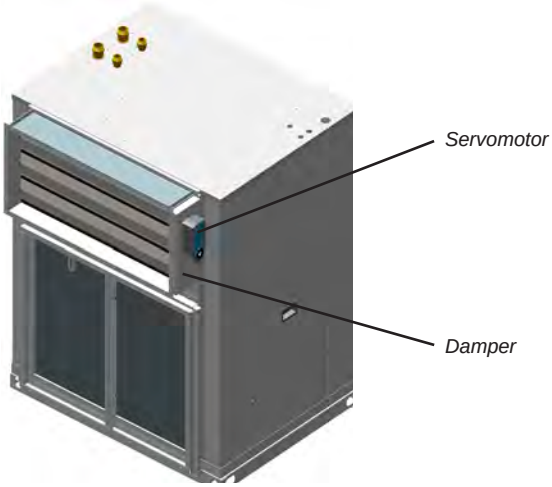

- Coils protection:
  - Coil with copper pipes and copper fins (upon request).
  - Coil with copper pipes and aluminium fins with polyurethane and blygold coating.
- During periods with low outdoor temperatures, anti-freeze protection for the unit:
  - Electrical heaters in the condensate drain pan. Mandatory when outdoor temperatures are below 3°C.
  - Operation with glycol water up to a minimum outlet temperature of -10ºC. Thermal insulation of the body 18 mm thick. Mandatory with negative conditions.
  - Anti-freeze protection with flexible electrical heaters around the pipe of the hydraulic circuit.

■ Installation

- Antivibration mounts made of rubber.
- Protection grille for the coil.
- Gravimetric filters in the return air. The filters frame is removable, and upon request, it is possible to supply the frame independently with the unit, to be joined on site.
- Flexible ducts for supply and return air.
- Flexible hydraulic connections (500mm), supplied in the kit. Available for:
  - Inlet / outlet of the unit.
  - Inlet / outlet of the desuperheater circuit.
- For 30PA units, filter with stainless steel mesh (500 microns), supplied in the kit.

Note: this filter is standard for 30PAC units.

- Cut-off and water control valves, supplied in the kit.
- High-pressure and low-pressure gauges in the cooling circuit.

■ Energy recovery

Desuperheater circuit which includes:

- Thermally isolated, welded stainless steel plate exchanger for working in a closed circuit in the recovery of hot gases.
- Draining valve and ball valve
- Hot water recovery control thermostat.
- Option for a 3-speed hot water circulation pump.

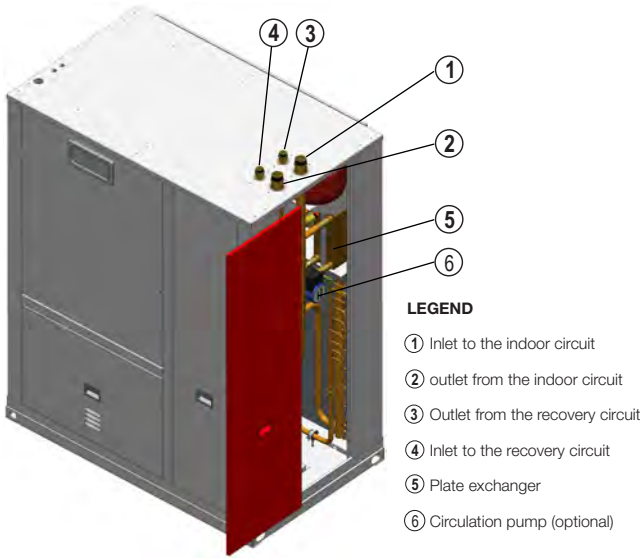

■ Electric panel

- Compressor soft starter.
- Transformer for power supply without neutral.
- Voltage 400 / 440V - 60 Hz (upon request).
- Energy meter for monitoring of the power consumption of the installation.

■ Control / communications management

- TCO user terminal, for remote control.
- RS485 serial cards for network communication with protocols: Carel, Modbus, LonWorks®, BACnet™ MSTP, Konnex.
- Ethernet pCO Web card for network communication with protocols: Modbus TCP/IP, BACnet™ Ethernet, TCP/IP, SNMP V1-2-3, FTP and HTTP.

Schematic diagram of the hydraulic circuit

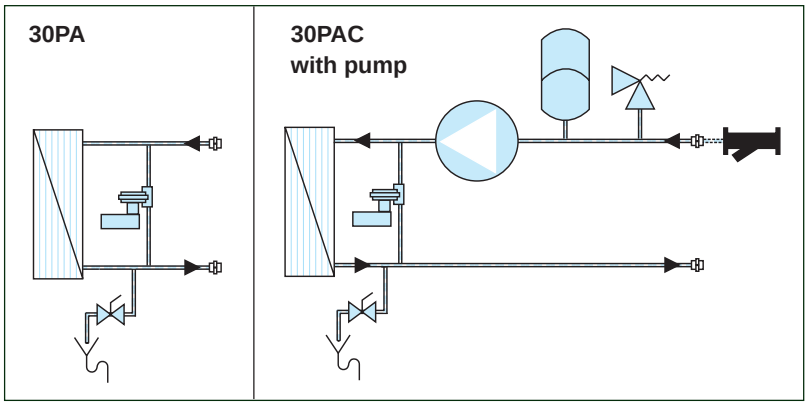

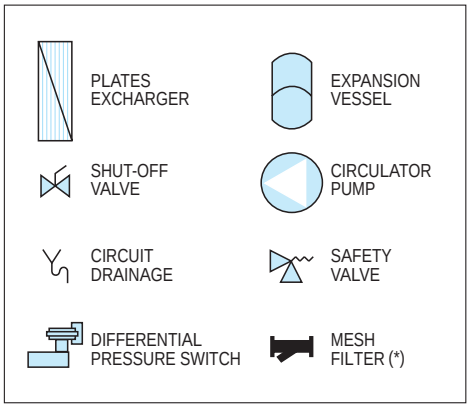

(*) Mesh filter, suplied in kit for installation by the client in 30PAC (optional for 30PA).
Cut-off and water regulation valves, as well as flexible hydraulic connections, can also be supplied in the kit.

Circulation pumps available for 30PAC

30PAC		90STD	90HEE	100STD	100HEE	120STD	120HEE	160STD	160HEE	180STD	180HEE
Number of pump	Standard	3.171	3.171	3.172	3.172	3.172	3.172	3.173	3.173	3.174	3.174
	High-pressure (optional)	3.173	3.173	3.173	3.173	3.174	3.174	3.174	3.174	3.175	3.175
	Low-pressure (optional)	--	--	3.171	3.171	3.171	3.171	3.171	--	3.229	3.229

Note: These pumps can operate with glycol water (mono-ethylene glycol), although with a reduction of the available pressure (due to the flow variation with glycol water). Consult the correction coefficients in the chapter "Operation with glycol water".

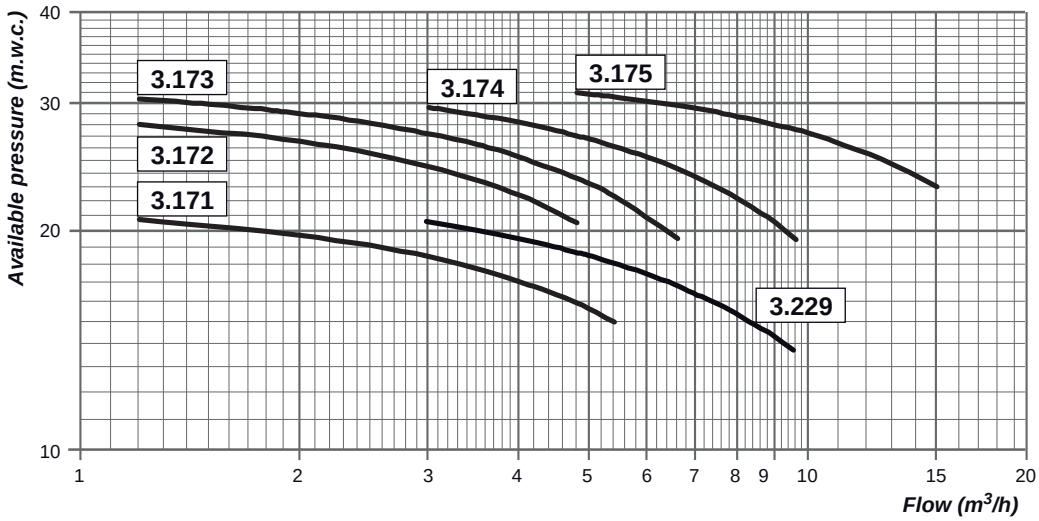

Number of pump		3.171	3.172	3.173	3.174	3.175	3.229
Motor output	kW	0,37	0,55	0,75	0,9	1,5	0,55
Maximum absorbed current	A	1,4	2,0	2,3	2,7	4,0	2,0
Minimum water flow	m^3/h	1,2	1,2	1,2	3,0	4,8	3,0
Maximum pressure	(m.w.c)	20,7	28,0	30,3	29,5	31,6	20,6
Maximum water flow	m^3/h	5,4	4,8	6,6	9,6	15,0	9,6
Minimum pressure	(m.w.c)	15,0	20,5	19,5	19,5	23,0	13,7

Unit components

■ Casing
- Casing made of galvanised steel metal with polyester paint, colour RAL 7035. Self-supporting and isolated frame.

■ Outdoor circuit
- Coil with copper pipes and aluminium fins.
- Condensate drain pan.
- Choice of air supply position:
  - HORIZONTAL: M00 assembly or VERTICAL: M01 assembly.

M00

M01

- Supply fan:

  STD Version (Standard):
  - Centrifugal fan coupling by pulleys and belts.
  - Electric motor with tensioner, energy-efficient IE2 motors, class F, IP55, and internal thermal protection.
  - One double-intake turbine, with an impeller with front-curved blades. Greased spherical bearings, with no maintenance required.
  - Choice of available pressure from 7 to 35 mm.w.c.

  HEE Version (High Energy Efficiency):
  - Variable speed electronic plug-fan(s) with condensation pressure control which adapt their rotation speed to the installation requirements, thereby reducing electricity consumption, the sound level at partial charge, and improving the average seasonal output of the unit (ESEER).
  - Energy-efficient ErP 2015 motor, Class F, IP54, and internal thermal protection.

■ Cooling circuit
- Hermetic scroll-type compressor, with acoustic insulating cover, assembled over antivibration mounts. Control of phase equilibrium and the direction of rotation.
- Crankcase heater.
- Thermostatic expansion valve with external equalisation.
- Anti-acid dehydrating filter, and liquid sight glass.
- Liquid receiver (heat pump units).
- Four-way cycle reversing valves (heat pump units).

■ Indoor circuit
- Thermally isolated, welded stainless steel plate exchanger.

■ Version with circulation pump included (30PAC)

This version includes, in the same casing that the 30PA version, the following components:
- Monocellular IP55 centrifugal circulation pump that can operate with glycol water (mono-ethylene glycol). The pump must be changed for mono-propylene glycol (upon request).
- Closed expansion vessel.
- Safety valve with a tare value of 4 bar and draining valve.
- Air bleeder valve (model 160HEE and 180HEE).
- Filter with stainless steel mesh (500 microns), supplied in the kit for installation by the installer.

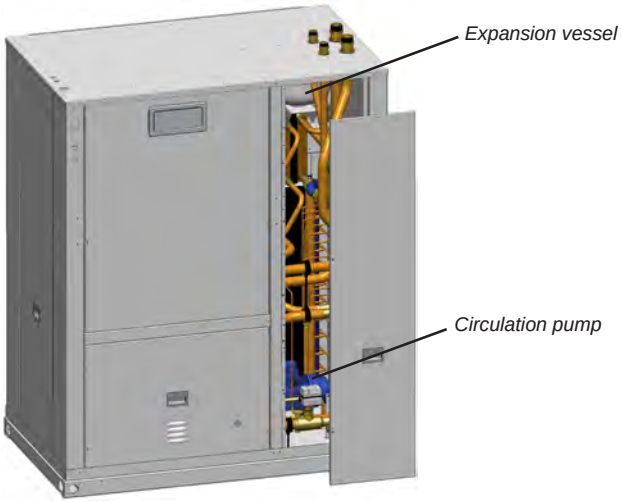

■ Protections
- High and low pressure pressostats.
- Differential pressure switch for control of water flow.
- Water anti-freeze protection built into the control, depending on the temperature measured by the probe placed on the exchanger outlet.
- Refrigerant anti-freeze protection.
- Compressor discharge temperature control.
- Non-return valve built into the compressor discharge.
- Compressor thermal protection.
- Main door switch.
- Automatic switch in the control circuit.
- Magnetothermic protection switches for the compressor and fan motor power line.
- Timing the disconnection of the circulation pump.
- Failure safety device for the circulation pump.

■ Electric panel
- Complete and fully wired electric panel. Insulated panel cover to prevent condensation.
- IP55 protection.
- Power supply with neutral and main ground connection.
- Compressor and fan motor contacts.

Controls

The 30PA control is basically comprised of a µPC SMALL control board, a pGD1 graphic terminal, a TCO user terminal (optional for remote control) and sensors.

This control allows the connection to a centralised technical management system by using a specific BMS card for some of the following communication protocols: Carel, Modbus, LonWorks®, BACnet™ MSTP, Konnex, Modbus TCP/IP, BACnet™ Ethernet, TCP/IP, SNMP V1-2-3, FTP and HTTP.

- Main functions:
  - Control in COOLING mode.
  - Selection of inlet water temperature setpoints for COOLING mode.
  - Permanent control and optimization of the operating parameters
  - Safety management.
  - Timing of the compressor.
  - Control of condensation and evaporation pressures.
  - Control of outdoor electronic plug-fan (HEE version).
  - Control of the circulation pump.
  - Regulation of the water outlet temperature.
  - Compensation of the setpoint based on the outdoor temperature.
  - Timer and weekly programming.
  - Failure diagnosis and main alarm.

- pGD1 terminal

This graphic terminal, installed on the electric panel of the machine, allows:
  - The initial programming of the unit
  - Modification of operating parameters.
  - Unit ON / OFF.
  - Selection of the operating mode.
  - Setting of setpoints.
  - On-screen display of controlled variables and sensor values measured.
  - On-screen display of active alarms and historical record of alarms.

- TCO user terminal (optional for remote control):

The TCO user terminal, for remote control, allows:
  - Modification of some operating parameters.
  - Unit ON / OFF.
  - Selection of the operating mode and setting of setpoints.
  - On-screen display some controlled variables and probe values.
  - On-screen display of alarms codes.

Operation limits

Series	Cooling mode			
	Air		Water (outlet T.)	
	Max.	**Min.**	**Max.**	**Min.**
30PA/PAC	46ºC	12ºC *	18ºC	5ºC **

* With control of the condensation pressure operating up to -15ºC.
** Minimum outlet temperature. With the option of glycol water for lower temperature operation from 5ºC to -10ºC.

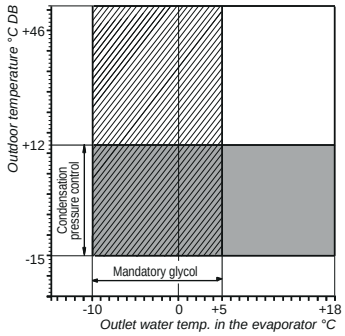

Minimum volume of water admissible in the installation (cooling mode)

The electronic control for the 30PA units incorporates an auto-adaptive control for the compressor operating time based on the time set for anti-short-cycle.

This control reduces the number of times the compressor is started up and permanently adjusts the system's thermal inertia, favouring the reduction of the minimum volume of water in the installation.

The size of the buffer tank can also be decreased since the unit will be stopped for less time.

30PAC		STD version					HEE version				
		90STD	100STD	120STD	160STD	180STD	90HEE	100HEE	120HEE	160HEE	180HEE
Minimum volume	l	101	120	143	187	204	107	132	152	189	210

The calculation of the minimum water volume has been done for nominal EUROVENT conditions, only in cooling mode. This value is applicable for the majority of refrigeration applications (group with fan-coil units).

Note: the buffer tan k is indispensable in installations that operate with a reduced volume of water (group with an air handling unit) or for industrial processes.
For applications with a heat pump, it is recommended that the buffer tank be used in order to maintain a stable temperature during the defrosting cycles.

Sound pressure level

Measurement conditions: in a clear field, measured at a distance of 10 metres, directivity 2 and at 1,5 metres from the ground.

30PA/PAC		STD version					HEE version				
		90STD	100STD	120STD	160STD	180STD	90HEE	100HEE	120HEE	160HEE	180HEE
Total	**dB(A)**	38,0	38,4	38,4	38,4	38,4	36,6	38,3	38,4	38,4	38,4

Note: The sound pressure level depends on the installation conditions and, as such, is only indicated as a guide. Values obtained according to standard ISO 3744.

Graphs of pressure drops in STD version

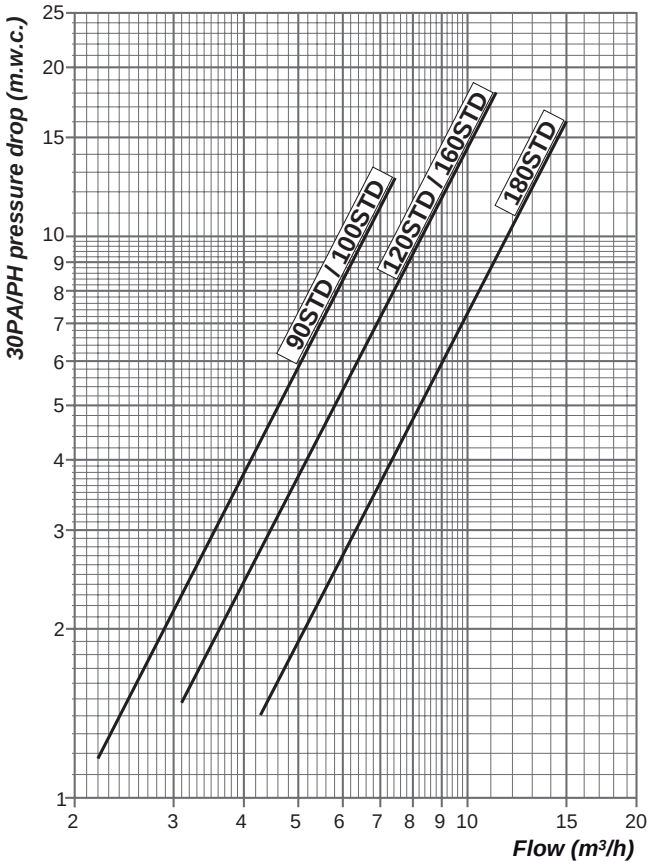

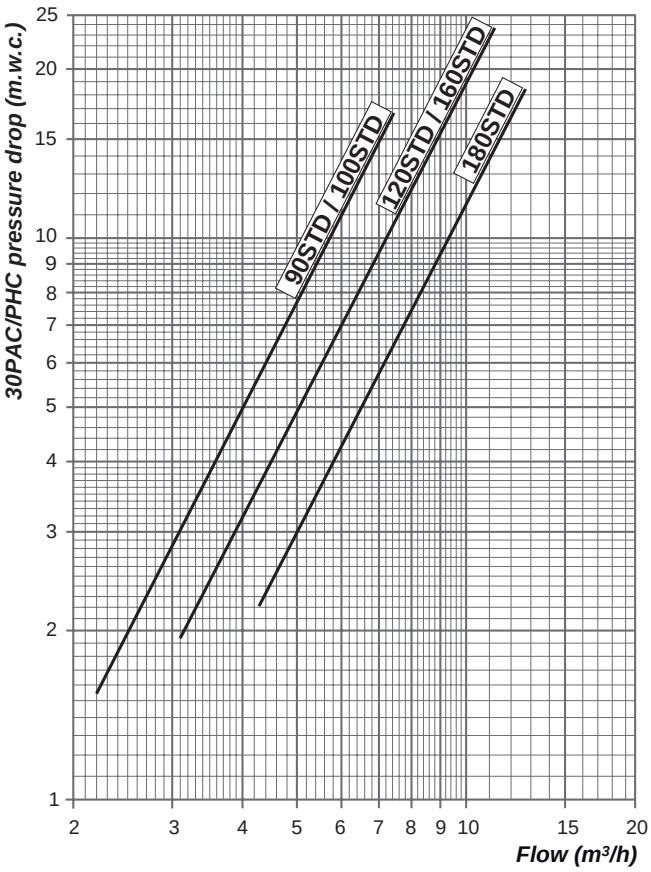

Graphs of pressure drops in HEE version

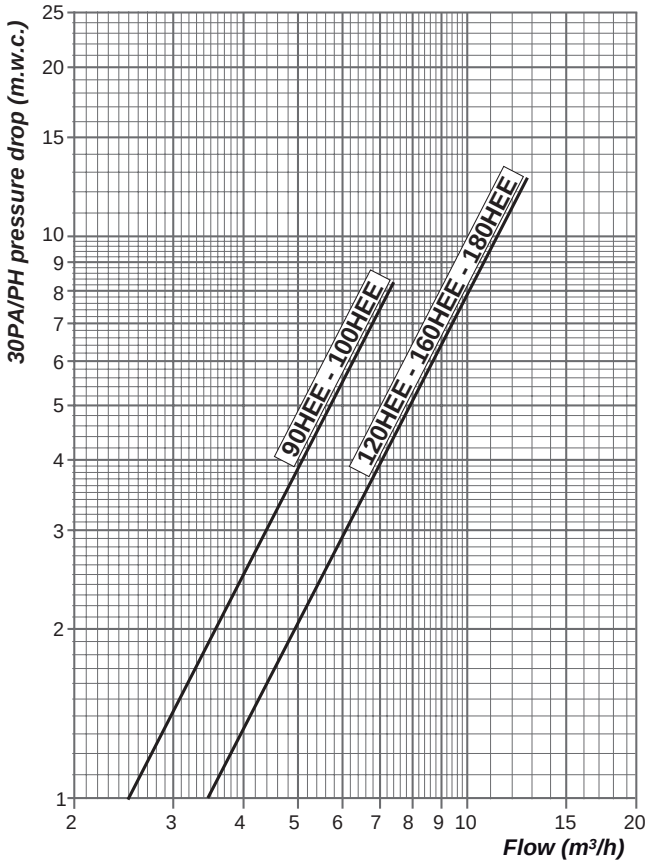

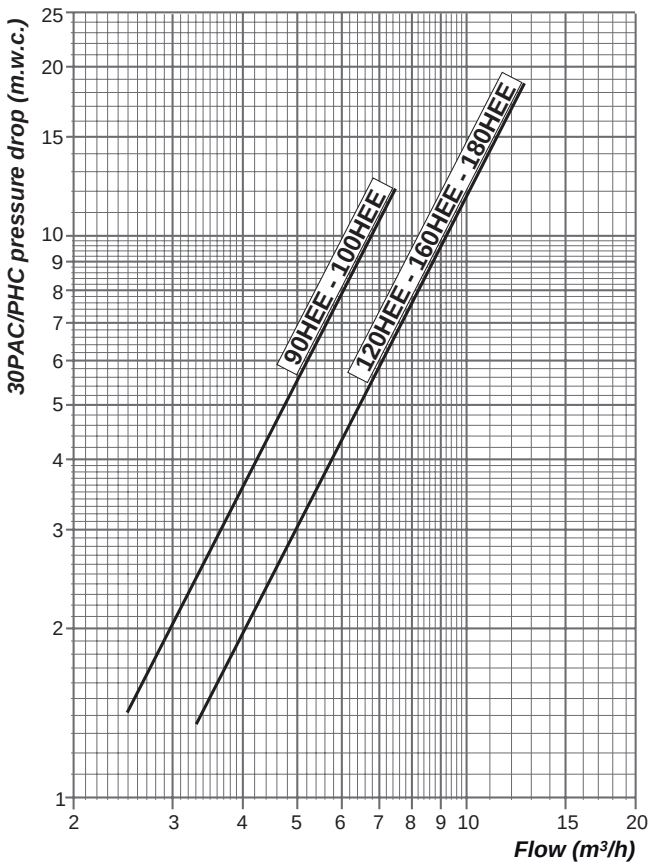

Dimension schemes for the STD version

30PA/PAC - 90STD / 100STD with HORIZONTAL supply, M00 assembly (mm)

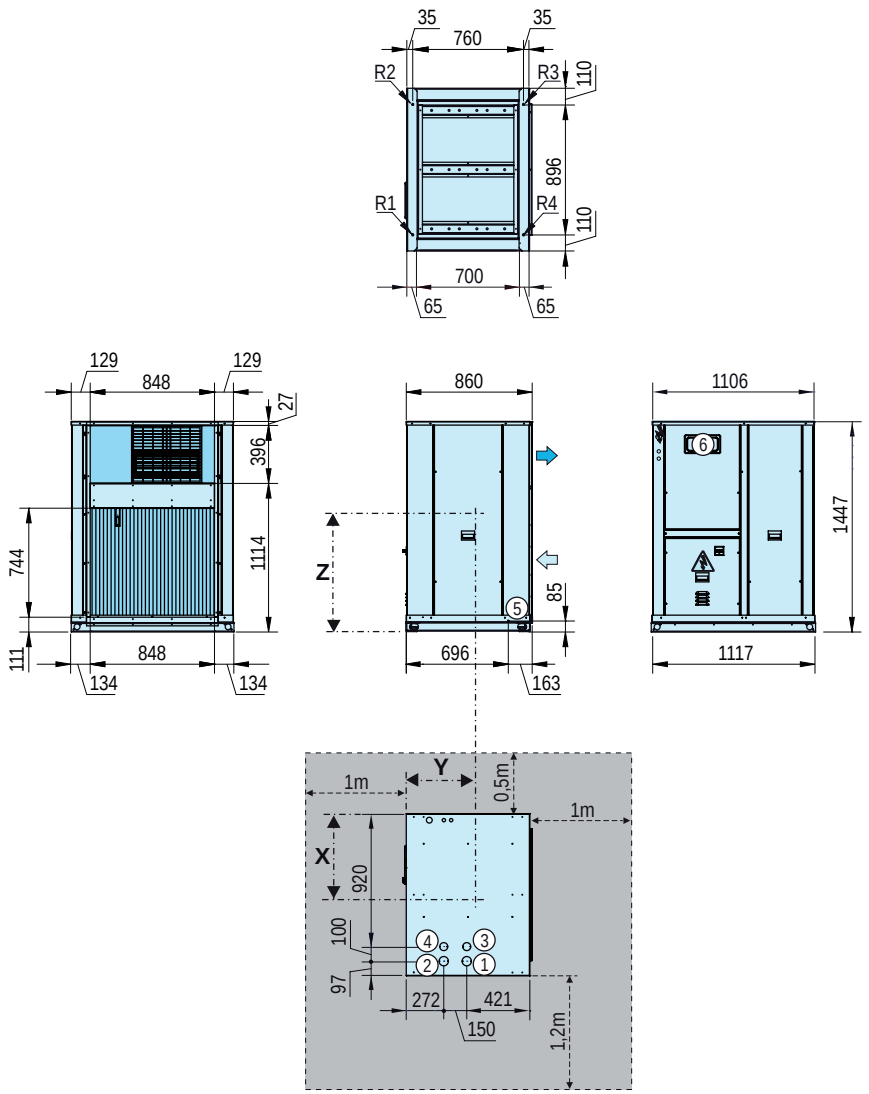

LEGEND

- HORIZONTAL outdoor circuit air supply
- Outdoor circuit air return
- Electric panel
- Electric power supply
- Door switch
- ① Water inlet to the indoor circuit
- ② Water outlet from the indoor circuit
- ③ Water outlet from the recovery circuit (optional)
- ④ Water inlet to the recovery circuit (optional)
- ⑤ Condensate outlet: trunk 3/4" M
- ⑥ Collapsible window for access to control panel (it protrudes 12 mm)

Note: the hidraulic connections ① ② protrude 58 mm

Anti-vibration anchoring: rivet nut M10

Clear space to be observed for maintenance operations and unit start-up

Models		Centre of gravity coordinates (mm)			Reactions in the supports (kg)				
		X	Y	Z	Weight	R1	R2	R3	R4
30PA	90STD	453	384	528	306	66	101	87	52
	100STD	488	398	576	315	69	93	84	60
30PAC	90STD	517	396	577	335	81	97	86	71
	100STD	515	402	574	345	82	99	90	73

Dimension schemes for the STD version

30PA/PAC - 90STD / 100STD with VERTICAL supply, M01 assembly (mm)

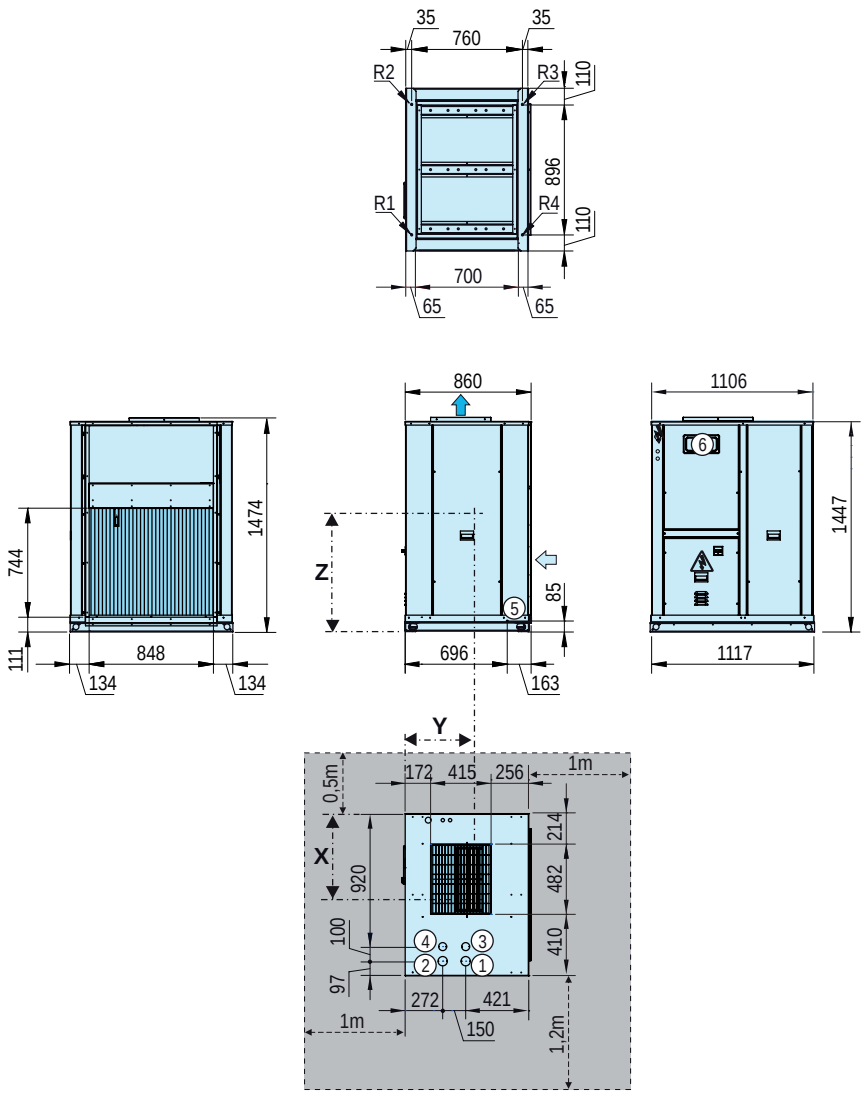

LEGEND

- VERTICAL outdoor circuit air supply
- Outdoor circuit air return
- Electric panel
- Electric power supply
- Door switch
- ① Water inlet to the indoor circuit
- ② Water outlet from the indoor circuit
- ③ Water outlet from the recovery circuit (optional)
- ④ Water inlet to the recovery circuit (optional)
- ⑤ Condensate outlet: trunk 3/4" M
- ⑥ Collapsible window for access to control panel (it protrudes 12 mm)

Note: the hidraulic connections ① ② protrude 58 mm

Anti-vibration anchoring: rivet nut M10

Clear space to be observed for maintenance operations and unit start-up

Models		Centre of gravity coordinates (mm)			Reactions in the supports (kg)				
		X	Y	Z	Weight	R1	R2	R3	R4
30PA	90STD	453	384	528	306	66	101	87	52
	100STD	488	398	576	315	69	93	84	60
30PAC	90STD	517	396	577	335	81	97	86	71
	100STD	515	402	574	345	82	99	90	73

Dimension schemes for the STD version

30PA/PAC - 120STD / 160STD / 180STD with horizontal supply, M00 assembly (mm)

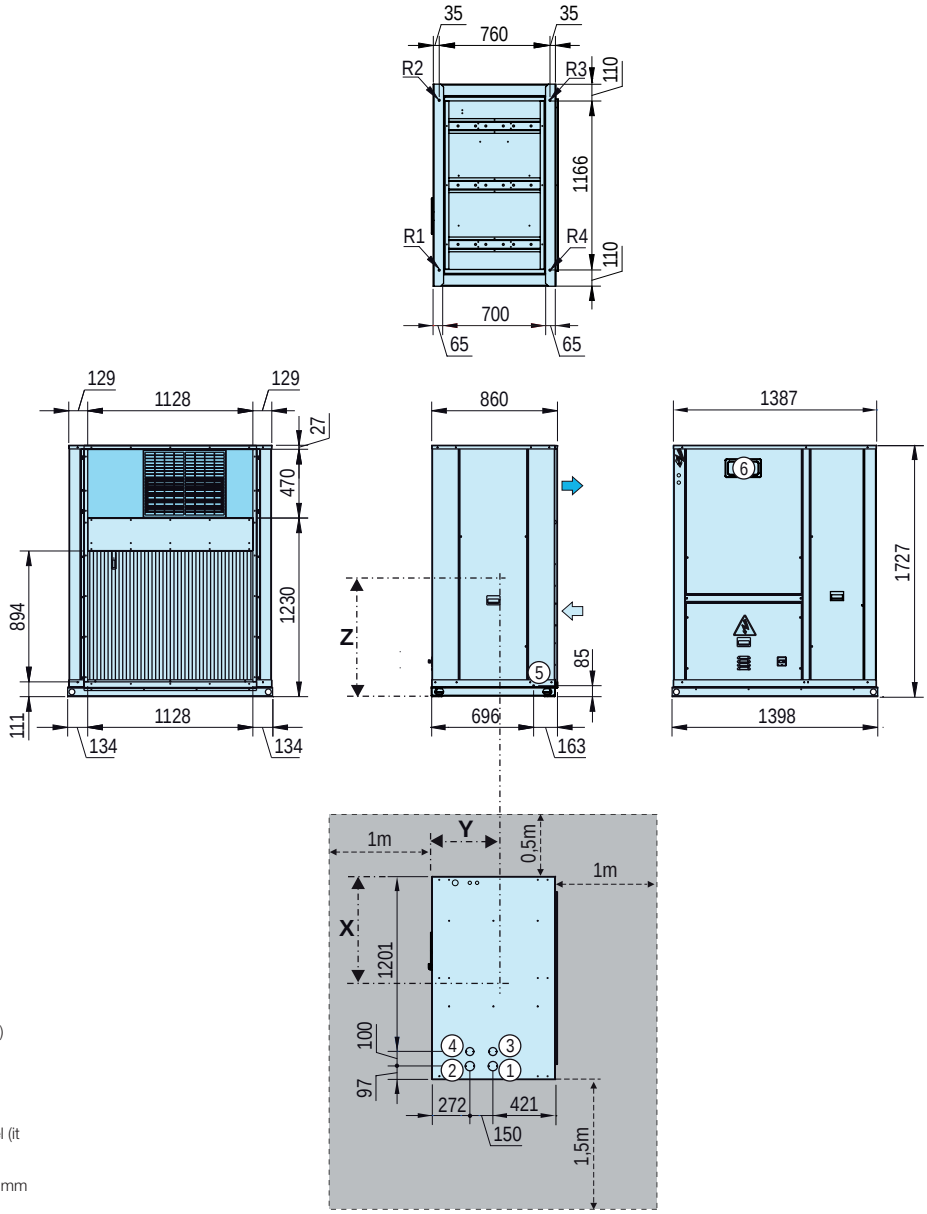

LEGEND

- HORIZONTAL outdoor circuit air supply
- Outdoor circuit air return
- Electric panel
- Electric power supply
- Door switch
- ① Water inlet to the indoor circuit
- ② Water outlet from the indoor circuit
- ③ Water outlet from the recovery circuit (optional)
- ④ Water inlet to the recovery circuit (optional)
- ⑤ Condensate outlet: trunk 3/4" M
- ⑥ Collapsible window for access to control panel (it protrudes 12 mm)

Note: the hidraulic connections ① ② protrude 58 mm

Anti-vibration anchoring: rivet nut M10

Clear space to be observed for maintenance operations and unit start-up

Models		Centre of gravity coordinates (mm)			Reactions in the supports (kg)				
		X	Y	Z	Weight	R1	R2	R3	R4
30PA	120STD	625	399	676	379	89	112	101	77
	160STD	619	400	666	397	92	119	107	79
	180STD	625	397	674	396	93	119	105	79
30PAC	120STD	645	402	673	410	99	117	107	87
	160STD	639	402	663	428	102	124	113	90
	180STD	646	400	669	429	104	123	111	91

Dimension schemes for the STD version

30PA/PAC - 120STD / 160STD / 180STD with VERTICAL supply, M01 assembly (mm)

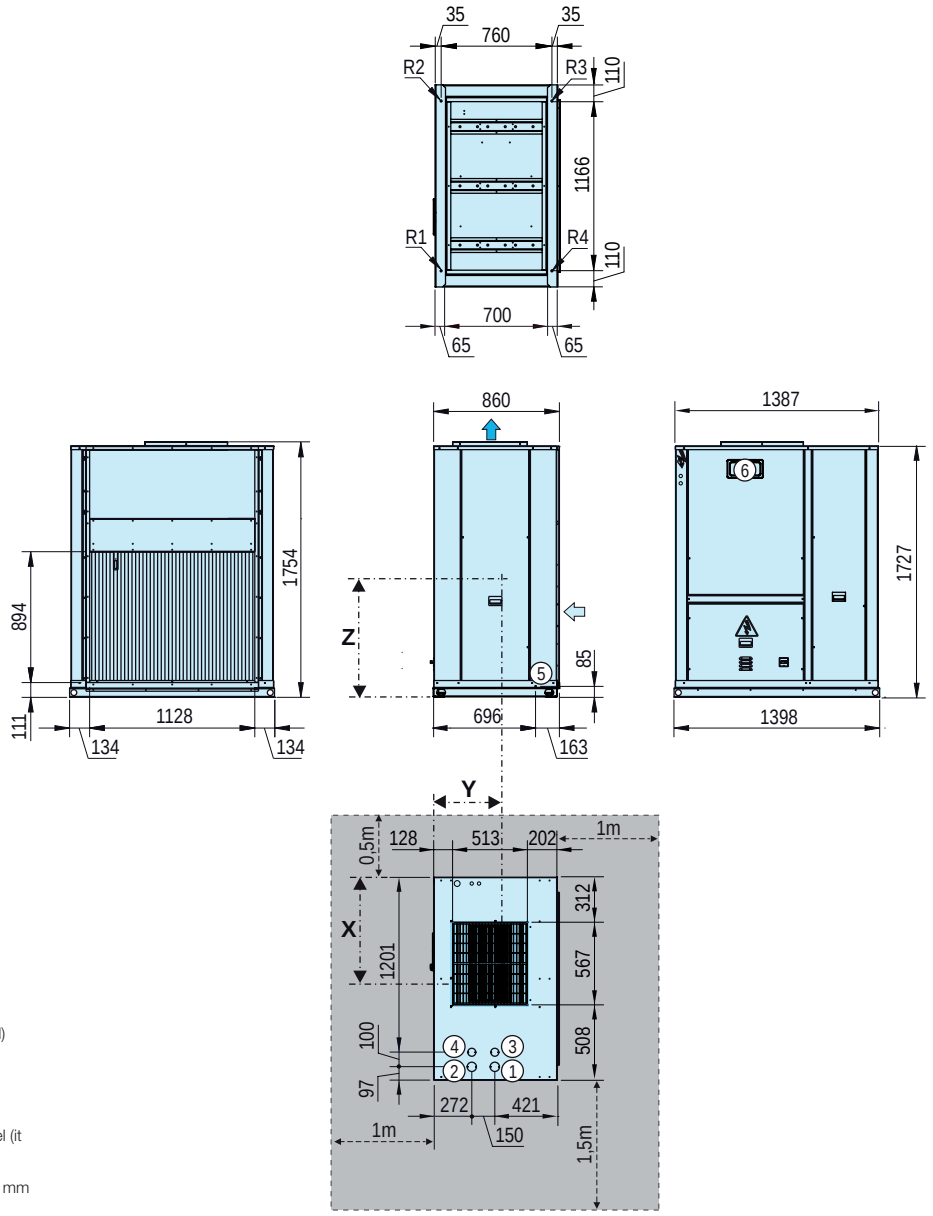

LEGEND

- VERTICAL outdoor circuit air supply
- Outdoor circuit air return
- Electric panel
- Electric power supply
- Door switch
- ① Water inlet to the indoor circuit
- ② Water outlet from the indoor circuit
- ③ Water outlet from the recovery circuit (optional)
- ④ Water inlet to the recovery circuit (optional)
- ⑤ Condensate outlet: trunk 3/4" M
- ⑥ Collapsible window for access to control panel (it protrudes 12 mm)

Note: the hidraulic connections ① ② protrude 58 mm

Anti-vibration anchoring: rivet nut M10

Clear space to be observed for maintenance operations and unit start-up

Models		Centre of gravity coordinates (mm)			Reactions in the supports (kg)				
		X	Y	Z	Weight	R1	R2	R3	R4
30PA	120STD	625	399	676	379	89	112	101	77
	160STD	619	400	666	397	92	119	107	79
	180STD	625	397	674	396	93	119	105	79
30PAC	120STD	645	402	673	410	99	117	107	87
	160STD	639	402	663	428	102	124	113	90
	180STD	646	400	669	429	104	123	111	91

Dimension schemes for the STD version

Condensation pressure control damper (mm)

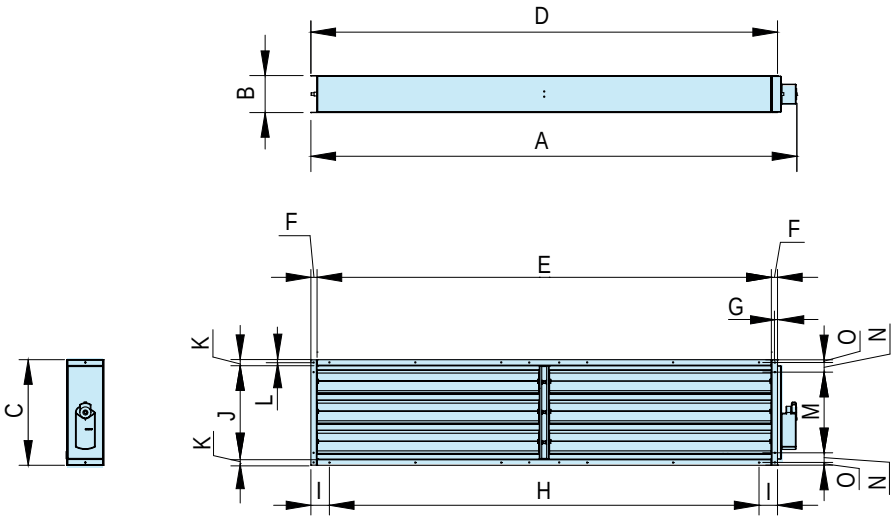

30PA / PAC	Assembly	Servos per damper	Total weight (kg)	A	B	C	D	E	F	G	H	I	J	K	L	M	N	O
90STD / 100STD	M00	1	13	978	150	446	895	845	25	11	3 x 266	49	396	25	11	296	64	11
120STD to 180STD		1	17	1258	150	520	1175	1125	25	11	4 x 269	49	470	25	11	370	64	11
90STD / 100STD	M01	1	13	633	150 (*)	428	550	500	25	11	1 x 400	75	378	25	11	278	64	11
120STD to 180STD		1	17	733	150 (*)	550	650	600	25	11	2 x 250	75	500	25	11	400	64	11

(*) In the case of vertical discharge (M01 assembly), the damper incorporates a frame (60 mm height) to fit the damper to the fan supply. This frame may be removed for duct installation.

Note: By default this damper is sent attached to the unit. For duct installation it is necessary to unscrew from the unit and disconnect the electrical supply of the servomotor.

Dimension schemes for the HEE version

30PA/PAC - 90HEE with HORIZONTAL supply, M00 assembly (mm)

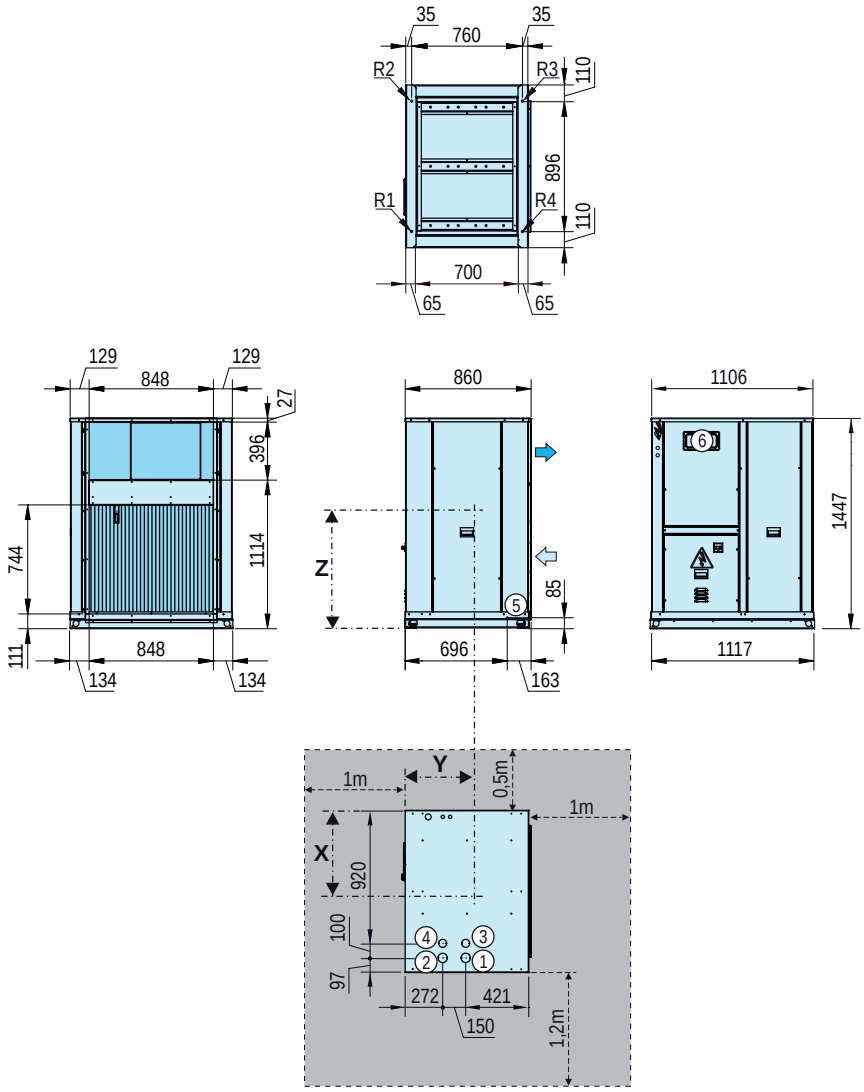

LEGEND

- HORIZONTAL outdoor circuit air supply
- Outdoor circuit air return
- Electric panel
- Electric power supply
- Door switch
- ① Water inlet to the indoor circuit
- ② Water outlet from the indoor circuit
- ③ Water outlet from the recovery circuit (optional)
- ④ Water inlet to the recovery circuit (optional)
- ⑤ Condensate outlet: trunk 3/4" M
- ⑥ Collapsible window for access to control panel (it protrudes 12 mm)

Note: the hidraulic connections ① ② protrude 58 mm

Anti-vibration anchoring: rivet nut M10

Clear space to be observed for maintenance operations and unit start-up

Models		Centre of gravity coordinates (mm)			Reactions in the supports (kg)				
		X	Y	Z	Weight	R1	R2	R3	R4
30PA	**90HEE**	502	422	614	298	64	100	85	50
30PAC	**90HEE**	538	427	599	327	77	84	87	79

Dimension schemes for the HEE version

30PA/PAC - 90HEE with VERTICAL supply, M01 assembly (mm)

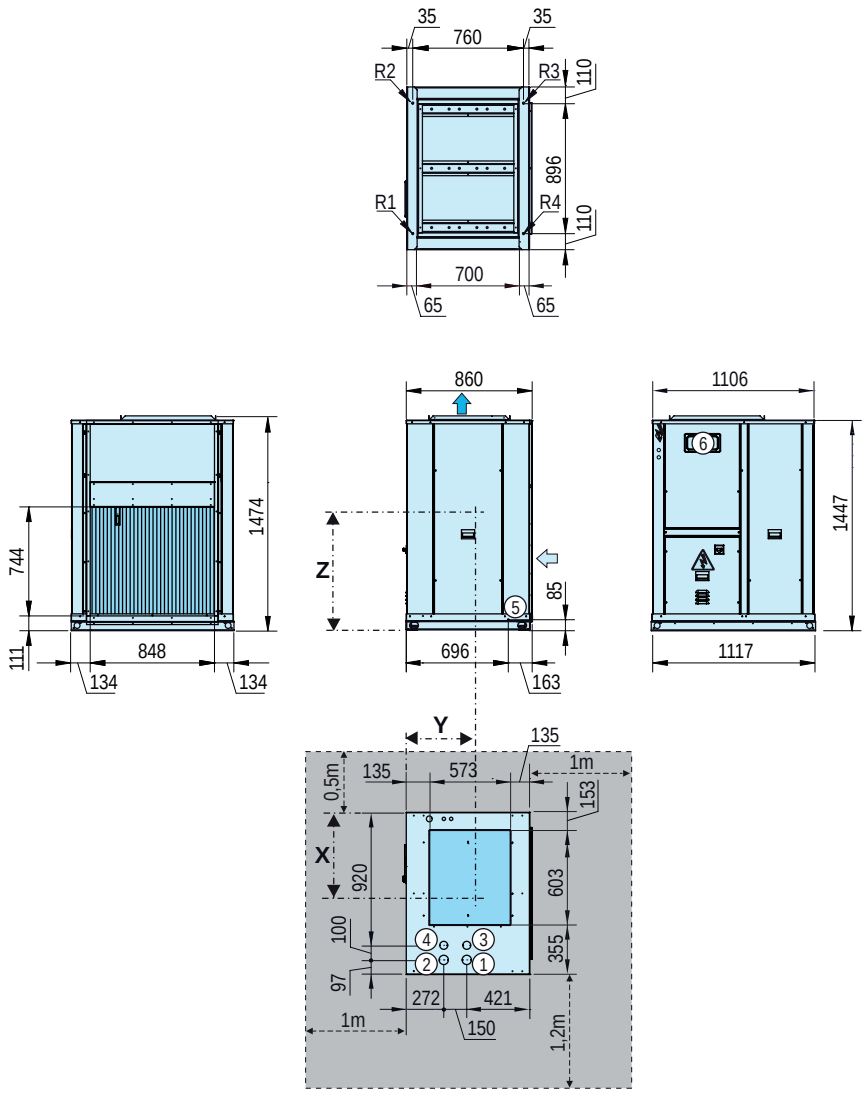

LEGEND

- VERTICAL outdoor circuit air supply
- Outdoor circuit air return
- Electric panel
- Electric power supply
- Door switch
- ① Water inlet to the indoor circuit
- ② Water outlet from the indoor circuit
- ③ Water outlet from the recovery circuit (optional)
- ④ Water inlet to the recovery circuit (optional)
- ⑤ Condensate outlet: trunk 3/4" M
- ⑥ Collapsible window for access to control panel (it protrudes 12 mm)

Note: the hidraulic connections ① ② protrude 58 mm

Anti-vibration anchoring: rivet nut M10

Clear space to be observed for maintenance operations and unit start-up

Models		Centre of gravity coordinates (mm)			Reactions in the supports (kg)				
		X	Y	Z	Weight	R1	R2	R3	R4
30PA	**90HEE**	502	422	614	298	64	100	85	50
30PAC	**90HEE**	538	427	599	327	77	84	87	79

Dimension schemes for the HEE version

30PA/PAC - 100HEE / 120HEE with HORIZONTAL supply, M00 assembly (mm)

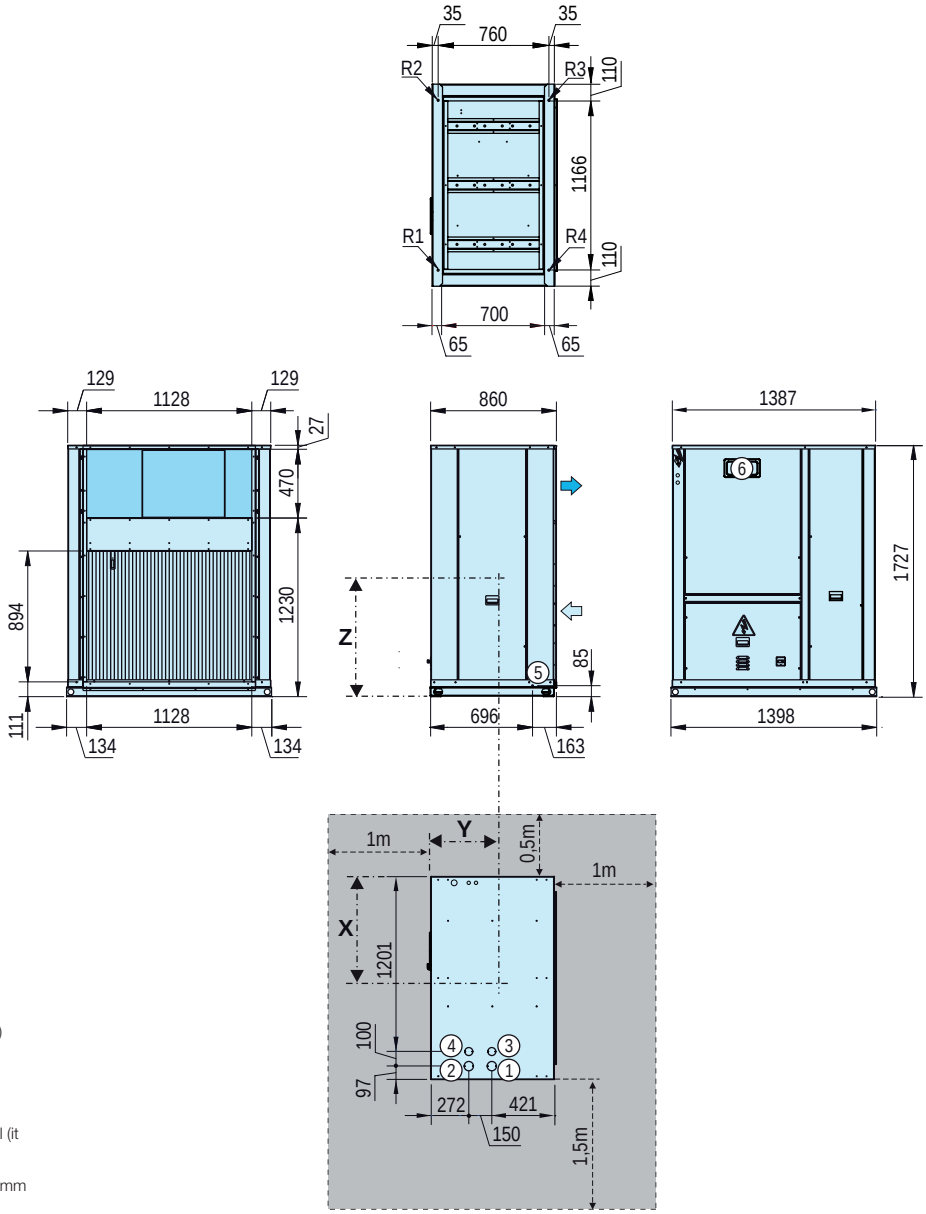

LEGEND

- HORIZONTAL outdoor circuit air supply
- Outdoor circuit air return
- Electric panel
- Electric power supply
- Door switch
- ① Water inlet to the indoor circuit
- ② Water outlet from the indoor circuit
- ③ Water outlet from the recovery circuit (optional)
- ④ Water inlet to the recovery circuit (optional)
- ⑤ Condensate outlet: trunk 3/4" M
- ⑥ Collapsible window for access to control panel (it protrudes 12 mm)

Note: the hidraulic connections ① ② protrude 58 mm

Anti-vibration anchoring: rivet nut M10

Clear space to be observed for maintenance operations and unit start-up

Models		Centre of gravity coordinates (mm)			Reactions in the supports (kg)				
		X	Y	Z	Weight	R1	R2	R3	R4
30PA	100HEE	569	417	673	358	63	127	116	52
	120HEE	628	426	742	376	88	112	100	77
30PAC	100HEE	638	418	623	390	88	109	107	86
	120HEE	696	427	674	408	100	101	104	103

Dimension schemes for the HEE version

30PA/PAC - 100HEE / 120HEE with VERTICAL supply, M01 assembly (mm)

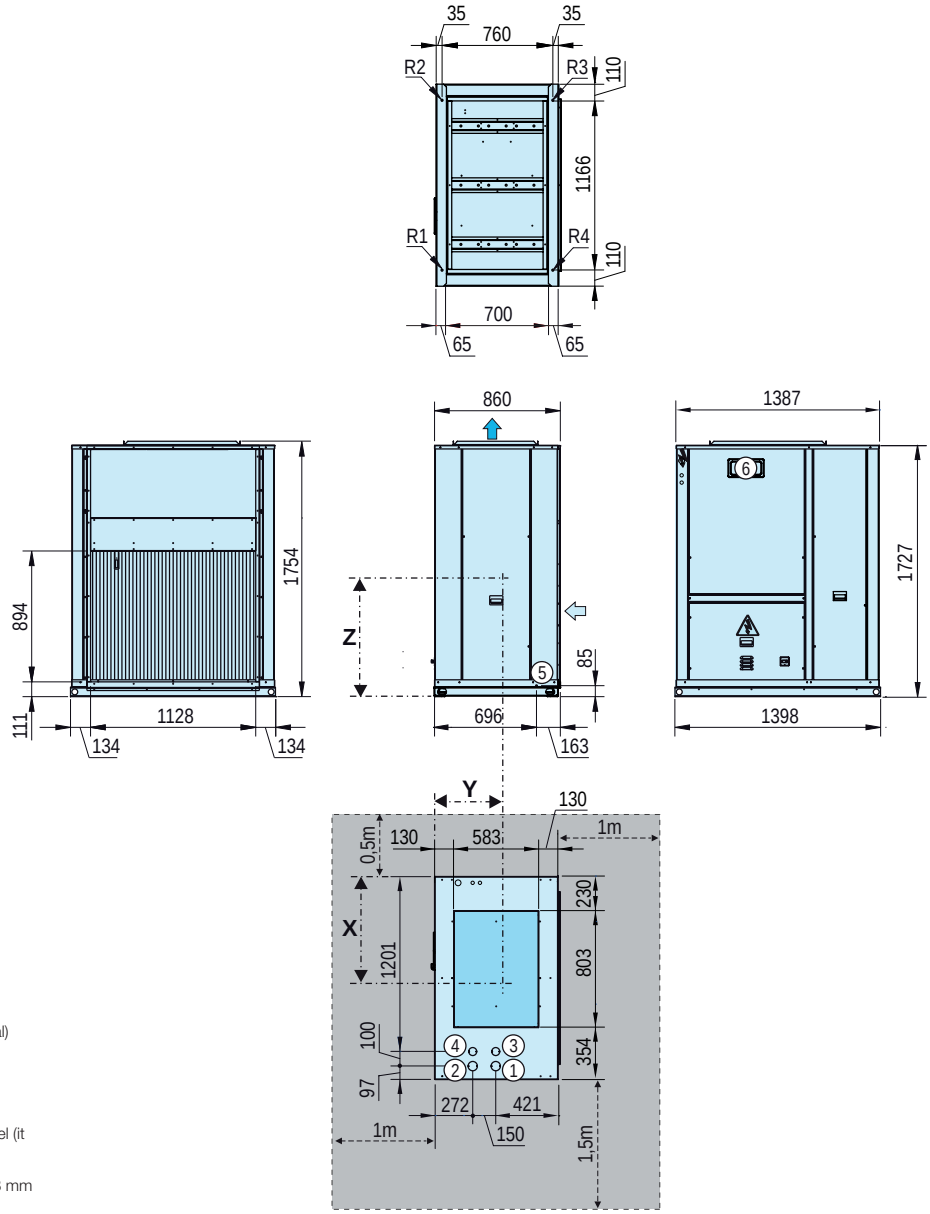

LEGEND

- VERTICAL outdoor circuit air supply
- Outdoor circuit air return
- Electric panel
- Electric power supply
- Door switch
- ① Water inlet to the indoor circuit
- ② Water outlet from the indoor circuit
- ③ Water outlet from the recovery circuit (optional)
- ④ Water inlet to the recovery circuit (optional)
- ⑤ Condensate outlet: trunk 3/4" M
- ⑥ Collapsible window for access to control panel (it protrudes 12 mm)

Note: the hidraulic connections ① ② protrude 58 mm

Anti-vibration anchoring: rivet nut M10

Clear space to be observed for maintenance operations and unit start-up

Models		Centre of gravity coordinates (mm)			Reactions in the supports (kg)				
		X	Y	Z	Weight	R1	R2	R3	R4
30PA	100HEE	569	417	673	358	63	127	116	52
	120HEE	628	426	742	376	88	112	100	77
30PAC	100HEE	638	418	623	390	88	109	107	86
	120HEE	696	427	674	408	100	101	104	103

Dimension schemes for the HEE version

30PA/PAC - 160HEE / 180HEE with HORIZONTAL supply, M00 assembly (mm)

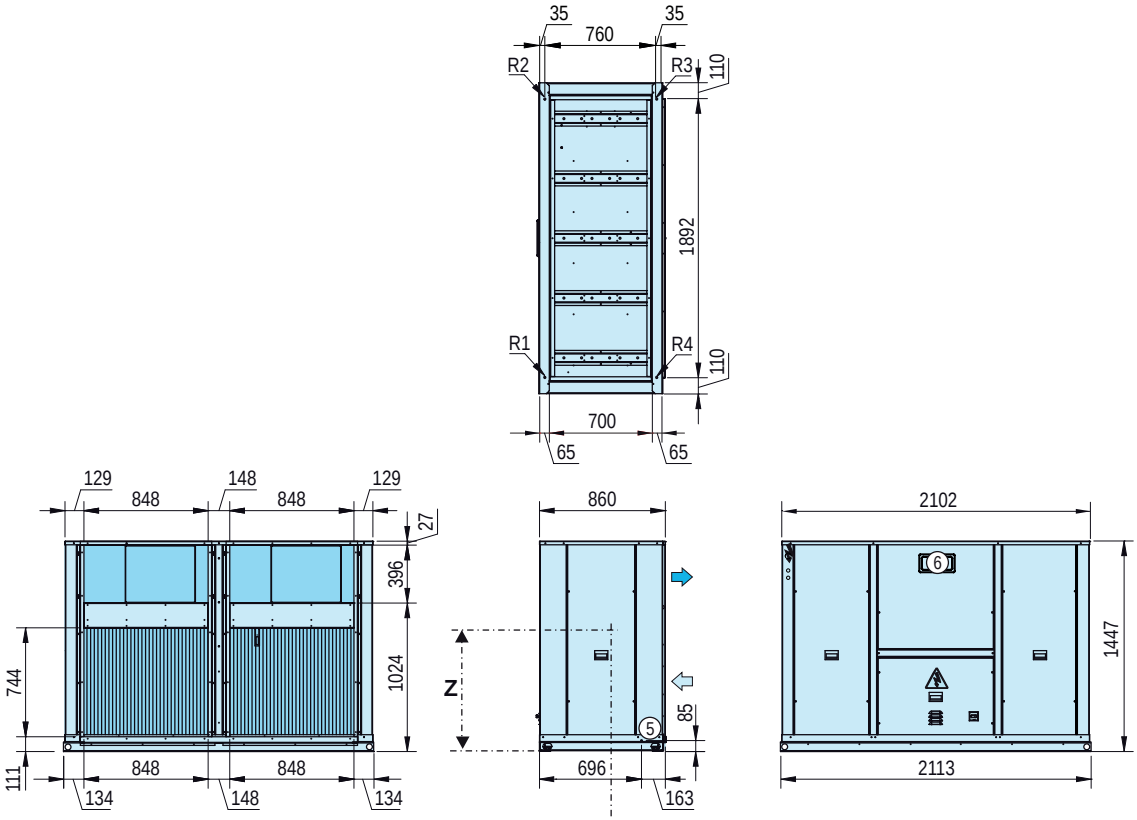

LEGEND

- HORIZONTAL outdoor circuit air supply
- Outdoor circuit air return
- Electric panel
- Electric power supply
- Door switch
- ① Water inlet to the indoor circuit
- ② Water outlet from the indoor circuit
- ③ Water outlet from the recovery circuit (optional)
- ④ Water inlet to the recovery circuit (optional)
- ⑤ Condensate outlet: trunk 3/4" M
- ⑥ Collapsible window for access to control panel (it protrudes 12 mm)

Note: the hidraulic connections ① ② protrude 58 mm

Anti-vibration anchoring: rivet nut M10

Clear space to be observed for maintenance operations and unit start-up

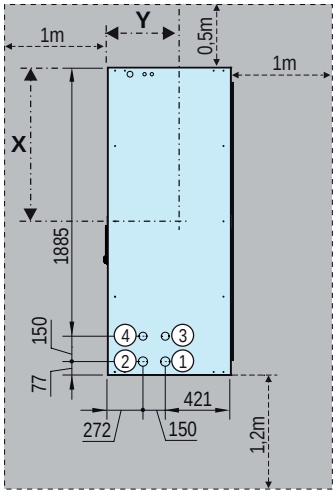

Models		Centre of gravity coordinates (mm)			Reactions in the supports (kg)				
		X	Y	Z	Weight	R1	R2	R3	R4
30PA	160HEE	940	435	573	465	69	177	163	56
	180HEE	936	434	579	468	71	178	163	56
30PAC	160HEE	975	436	570	497	109	130	140	118
	180HEE	972	436	575	503	110	132	142	119

Dimension schemes for the HEE version

30PA/PAC - 160HEE / 180HEE with VERTICAL supply, M01 assembly (mm)

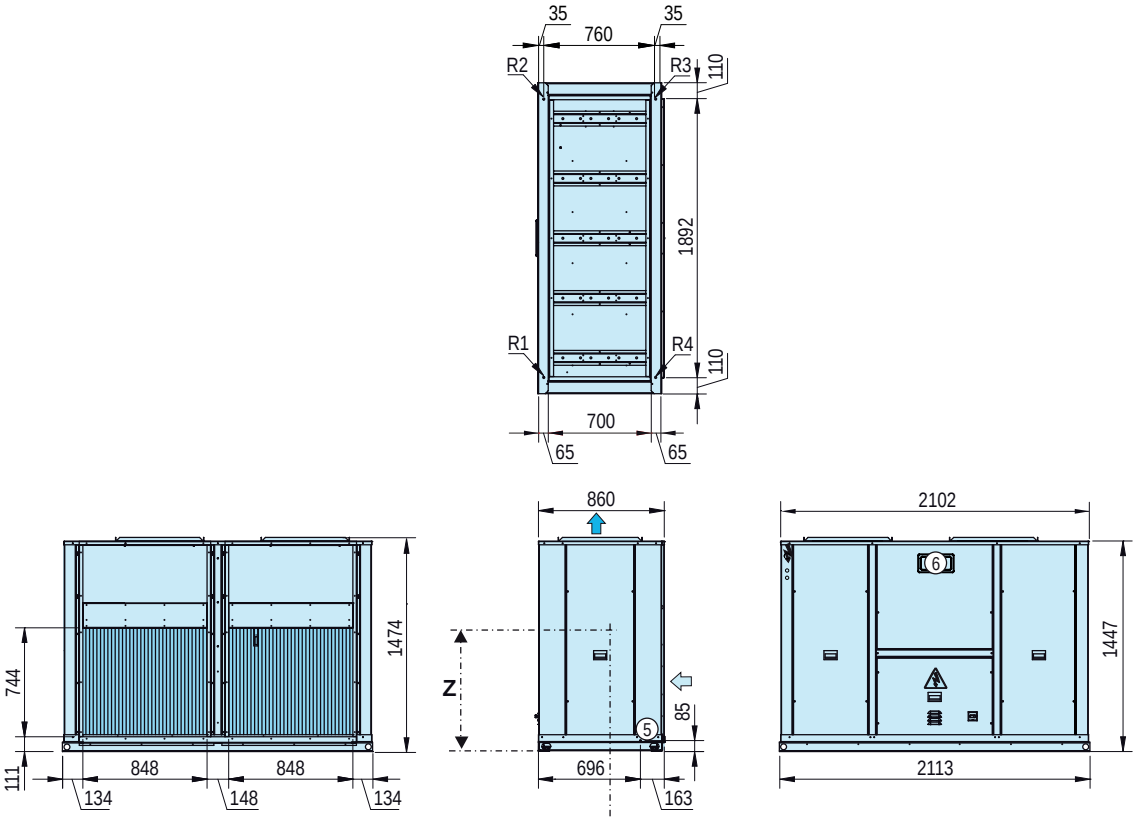

LEGEND

- VERTICAL outdoor circuit air supply
- Outdoor circuit air return
- Electric panel
- Electric power supply
- Door switch
- ① Water inlet to the indoor circuit
- ② Water outlet from the indoor circuit
- ③ Water outlet from the recovery circuit (optional)
- ④ Water inlet to the recovery circuit (optional)
- ⑤ Condensate outlet: trunk 3/4" M
- ⑥ Collapsible window for access to control panel (it protrudes 12 mm)

Note: the hidraulic connections ① ② protrude 58 mm

Anti-vibration anchoring: rivet nut M10

Clear space to be observed for maintenance operations and unit start-up

Models		Centre of gravity coordinates (mm)			Reactions in the supports (kg)				
		X	Y	Z	Weight	R1	R2	R3	R4
30PA	160HEE	940	435	573	465	69	177	163	56
	180HEE	936	434	579	468	71	178	163	56
30PAC	160HEE	975	436	570	497	109	130	140	118
	180HEE	972	436	575	503	110	132	142	119

Dimensions of air flexible ducts (Option)

Supply ducts

STD version	Dimensions (mm)			Weight (kg)
	A	B	C	
M00 assembly without damper ①				
90STD / 100STD	859	407	132	4
120STD / 160STD / 180STD	1139	481	132	5
M00 assembly with damper ①				
90STD / 100STD	859	407	132	4
120STD / 160STD / 180STD	1139	481	132	5
M01 assembly without damper ①				
90STD / 100STD	552	430	152	4
120STD / 160STD / 180STD	652	552	152	5
M01 assembly with damper ①				
90STD / 100STD	513	391	132	4
120STD / 160STD / 180STD	613	513	132	5

HEE version	Dimensions (mm)			Weight (kg)
	A	B	C	
M00 assembly				
90HEE	859	407	132	4
100HEE / 120HEE	1139	481	132	5
160HEE / 180HEE	1854	407	132	7
M01 assembly				
90HEE	633	589	132	4
100HEE / 120HEE	817	639	132	5
160HEE / 180HEE	1619	590	132	7

M00 asssembly:
Horizontal supply

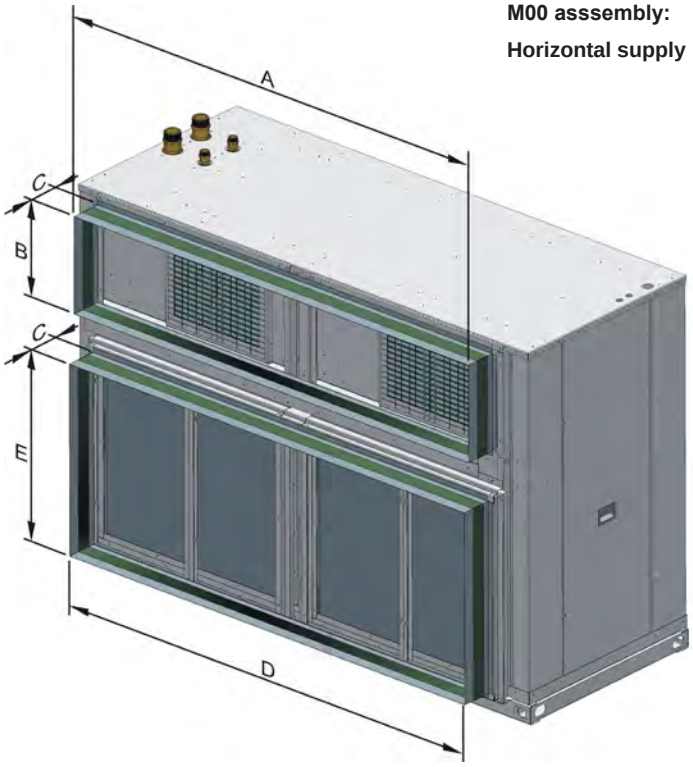

Return ducts

STD version	Dimensions (mm)			Weight (kg)
	C	D	E	
Assembly without filters				
90STD / 100STD	132	903	800	5
120STD / 160STD / 180STD	132	1183	950	7
Assembly with filters				
90STD / 100STD	109	903	800	5
120STD / 160STD / 180STD	109	1183	950	7

HEE version	Dimensions (mm)			Weight (kg)
	C	D	E	
Assembly without filters				
90HEE	132	903	800	5
100HEE / 120HEE	132	1183	950	7
160HEE / 180HEE	132	1897	800	8
Assembly with filters				
90HEE	109	903	800	5
100HEE / 120HEE	109	1183	950	7
160HEE / 180HEE	109	1897	800	8

M01 asssembly:
Vertical supply

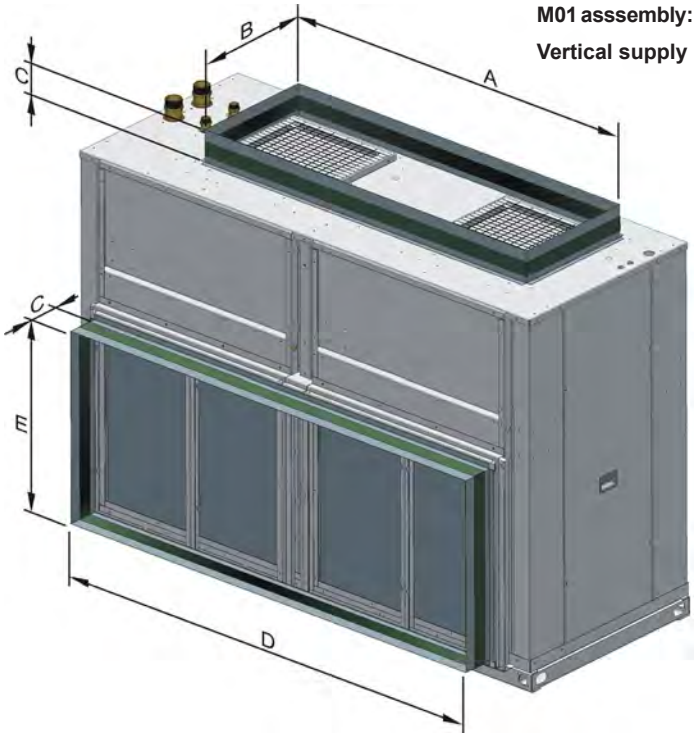

① Damper for condensation pressure control (optional): add the height of the damper to the flexible duct.

Gravimetric filters in the return air (option)

Air pressure drop

30PA / PAC	Nominal air flow (m^3/h)	Pressure drop (mm.w.c.)
90STD	6500	4,9
100STD	7000	5,7
120STD	10000	4,6
160STD / 180STD	12200	6,8

30PA / PAC	Nominal air flow (m^3/h)	Pressure drop (mm.w.c.)
90HEE	6500	4,9
100HEE	7000	2,2
120HEE	10000	4,6
160HEE	12200	4,3
180HEE	14000	5,7

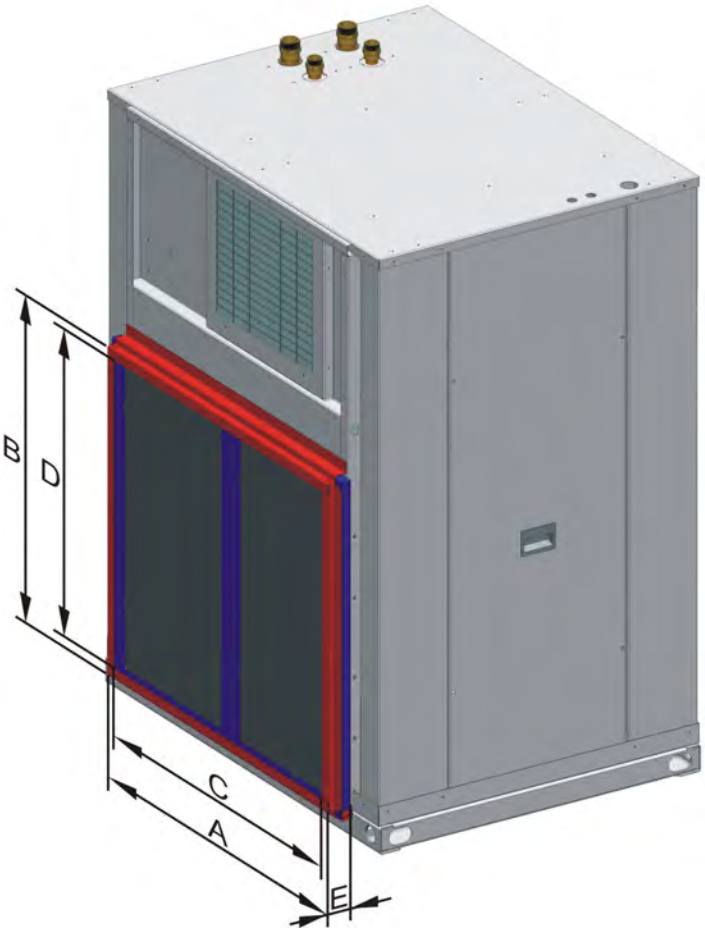

Dimensions (mm)

30PA / PAC	Frames number	Frame dimensions (mm)					Distance between frames (mm)	Cells number	Cell thickness (mm)	Cell size (mm)	Total weight (mm)
		A	B	C	D	E					
90STD / 100STD	1	896	795	848	744	53	---	2	25	818 x 468	6
120STD / 160STD / 180STD	1	1176	945	1128	894	53	---	3	25	968 x 405	8

30PA / PAC	Frames number	Frame dimensions (mm)					Distance between frames (mm)	Cells number	Cell thickness (mm)	Cell size (mm)	Total weight (mm)
		A	B	C	D	E					
90HEE	1	896	795	848	744	53	---	2	25	818 x 468	6
100HEE / 120HEE	1	1176	945	1128	894	53	---	3	25	968 x 405	8
160HEE / 180HEE	2	896	795	848	744	53	100	4	25	818 x 468	12

Filters frame is removable, and on request, can be supplied separate from the unit for connection on site.

30RBS

Nominal cooling capacity 40-156 kW

AQUASNAP™

Commercial and industrial applications

Compact design

Quiet operation

Variable water flow (optional)

Partial heat reclaim

The AquaSnap range of liquid chillers was designed for commercial (air conditioning of offices, hotels etc.) or industrial (low-temperature process units etc.) applications.

The AquaSnap integrates the latest technological innovations:

- Non-ozone depleting refrigerant R410A
- All-aluminium microchannel heat exchangers for the cooling only units (30RBS)
- Scroll compressors
- Low-noise fans made of a composite material
- Auto-adaptive microprocessor control
- Electronic expansion valve
- Variable-speed pump (option)

The AquaSnap can be equipped with a hydronic module integrated into the unit chassis, limiting the installation to straightforward operations like connection of the power supply and the chilled water supply and return piping.

Physical data

EUROVENT CERTIFIED PERFORMANCE
www.eurovent-certification.com

30RBS		039	045	050	060	070	080	090	100	120	140	160
Cooling												
Air conditioning application as per EN14511-3:2013† - standard unit												
Condition 1:												
Nominal cooling capacity	kW	40	44	51	58	67	79	87	97	114	135	156
ESEER	kW/ kW	3.75	3.88	3.95	3.80	3.62	3.67	3.91	3.94	3.83	3.68	3.87
EER	kW/ kW	2.87	2.76	2.67	2.66	2.72	2.70	2.73	2.73	2.67	2.70	2.65
Eurovent class cooling		C	C	D	D	C	C	C	C	D	C	D
Condition 2:												
Nominal cooling capacity	kW	53	59	69	81	85	98	114	126	151	171	194
EER	kW/ kW	3.44	3.32	3.12	3.31	2.97	3.06	3.18	3.09	3.10	2.99	3.01
Air conditioning application†† - standard unit												
Condition 1:												
Nominal cooling capacity	kW	40	44	52	59	68	80	87	98	115	136	157
ESEER	kW/ kW	3.97	4.14	4.22	4.06	3.84	3.90	4.16	4.18	4.08	3.94	4.16
EER	kW/ kW	2.95	2.84	2.75	2.74	2.80	2.78	2.79	2.79	2.73	2.77	2.72
Condition 2:												
Nominal cooling capacity	kW	54	59	69	82	86	99	115	127	152	173	196
EER	kW/ kW	3.59	3.47	3.26	3.47	3.08	3.19	3.28	3.19	3.21	3.09	3.12
Sound levels												
Standard unit												
Sound power level*	dB(A)	80	81	81	81	87	87	84	84	84	90	90
Sound pressure level at 10 m**	dB(A)	49	49	49	49	55	55	52	52	52	58	58
Unit with option 15LS												
Sound power level*	dB(A)	79	80	80	80	80	80	83	83	83	83	83
Sound pressure level at 10 m**	dB(A)	48	48	48	48	48	48	51	51	51	51	51
Dimensions												
Length	mm	1061	1061	1061	1061	1061	1061	2258	2258	2258	2258	2258
Width	mm	2050	2050	2050	2050	2050	2050	2050	2050	2050	2050	2050
Height	mm	1330	1330	1330	1330	1330	1330	1330	1330	1330	1330	1330
Operating weight with MCHE coil* **												
Standard unit without hydronic module	kg	429	436	442	454	454	471	766	776	789	896	928
Standard unit with hydronic module												
Single high-pressure pump	kg	459	466	472	484	484	501	798	808	825	935	967
Dual high-pressure pump	kg	484	492	497	510	510	527	843	853	873	972	1004
Compressors		Hermetic scroll compressors, 48.3 r/s										
Circuit A		2	2	2	2	2	2	3	3	3	2	2
Circuit B		-	-	-	-	-	-	-	-	-	2	2
Number of capacity stages		2	2	2	2	2	2	3	3	3	4	4
Refrigerant charge with MCHE coil* **		R-410A										
Circuit A	kg	4.7	5.3	5.9	6.7	6.2	7.3	10.7	10.8	11.4	6.5	7.4
Circuit B	kg	-	-	-	-	-	-	-	-	-	6.5	7.4
Capacity control		Touch Pilot Junior										
Minimum capacity	%	50	50	50	50	50	50	33	33	33	25	25
Condensers		All-aluminium microchannel heat exchanger (MCHE)										
Fans		Axial Flying Bird IV with rotating shroud										
Quantity		1	1	1	1	1	1	2	2	2	2	2
Maximum total air flow	l/s	3885	3883	3687	3908	5013	5278	6940	6936	7370	10026	10556
Maximum rotation speed	r/s	12	12	12	12	16	16	12	12	12	16	16
Evaporator		Direct expansion. plate heat exchanger										
Water volume	l	2.6	3.0	3.3	4.0	4.8	5.6	8.7	9.9	11.3	12.4	14.7
Without hydronic module												
Max. water-side operating pressure	kPa	1000	1000	1000	1000	1000	1000	1000	1000	1000	1000	1000
With hydronic module (option)												
Single or dual pump (as selected)		Pump, Victaulic screen filter, safety valve, expansion tank, purge valves (water + air), pressure sensors										
Expansion tank volume	l	12	12	12	12	12	12	35	35	35	35	35
Expansion tank pressure****	bar	1	1	1	1	1	1	1.5	1.5	1.5	1.5	1.5
Max. water-side operating pressure	kPa	400	400	400	400	400	400	400	400	400	400	400
Water connections with/without hydronic module		Victaulic										
Diameter	in	2	2	2	2	2	2	2	2	2	2	2
Outside diameter	mm	60.3	60.3	60.3	60.3	60.3	60.3	60.3	60.3	60.3	60.3	60.3
Chassis paint colour	Colour code: RAL7035											

† Eurovent-certified performances in accordance with standard EN14511-3:2013.
†† Gross performances, not in accordance with EN14511-3:2013. These performances do not take into account the correction for the proportionnal heating capacity and power input generated by the water pump to overcome the internal pressure drop in the heat exchanger.
Condition 1: cooling mode conditions: evaporator water entering/leaving temperature 12°C/7°C, outside air temperature 35°C, evaporator fooling factor 0 m².K/W
Condition 2: cooling mode conditions: evaporator water entering/leaving temperature 23°C/18°C, outside air temperature 35°C, evaporator fooling factor 0 m².K/W
* In dB ref=10-12 W, (A) weighting. Declared dualnumber noise emission values in accordance with ISO 4871 (with an associated uncertainty of +/-3dB(A)). Measured in accordance with ISO 9614-1 and certified by Eurovent.
** In dB ref 20µPa, (A) weighting. Declared dualnumber noise emission values in accordance with ISO 4871 (with an associated uncertainty of +/-3dB(A)). For information, calculated from the sound power level Lw(A).
*** Weight shown is a guideline only. Please refer to the unit nameplate.
**** When delivered, the standard pre-inflation of the tank is not necessarily the optimal value for the system. To permit changing the water volume, change the inflation pressure to a pressure that is close to the static head of the system. Fill the system with water (purging the air) to a pressure value that is 10 to 20 kPa higher than the pressure in the tank.

Eurovent certified data

Electrical data

30RBS without hydronic module		039	045	050	060	070	080	090	100	120	140	160
Power circuit												
Nominal power supply	V-ph-Hz	400-3-50										
Voltage range	V	360-440										
Control circuit supply		24 V via internal transformer										
Maximum start-up current (Un)*												
Standard unit	A	113.8	134.8	142.8	145.8	176.0	213.0	173.6	207.6	247.6	243.0	286.0
Unit with electronic starter option	A	74.7	86.5	93.8	96.2	114.4	139.8	-	-	-	-	-
Unit power factor at maximum capacity**												
Maximum operating power input**	kW	19.5	22.3	24.5	27.9	31.2	35.8	42.3	45.6	52.5	62.4	71.6
Nominal unit operating current draw***	A	25.6	29.0	33.0	36.0	42.4	52.8	55.4	61.7	77.3	84.8	105.6
Maximum operating current draw (Un)****		34.8	44.8	46.8	52.8	67.0	73.0	80.6	98.6	107.6	134.0	146.0
Maximum operating current draw (Un-10%)†		38.0	49.2	51.4	58.4	74.8	79.6	89.0	110.3	117.5	149.6	159.2
Customer-side unit power reserve		Customer reserve at the 24 V control power circuit										
Short-circuit stability and protection		See table “Short-circuit stability current” below										

* Maximum instantaneous start-up current at operating limit values (maximum operating current of the smallest compressor(s) + fan current + locked rotor current of the largest compressor).
** Power input, compressors and fans, at the unit operating limits (saturated suction temperature 10°C, saturated condensing temperature 65°C) and nominal voltage of 400 V (data given on the unit nameplate).
*** Standardised Eurovent conditions: evaporator entering/leaving water temperature 12°C/7°C, outside air temperature 35°C.
**** Maximum unit operating current at maximum unit power input and 400 V (values given on the unit nameplate).
† Maximum unit operating current at maximum unit power input and 360 V.

Options

Options	No.	Description	Advantages	Use 30RBS
Condenser with anti-corrosion post-treatment	2B	Coils with factory-applied Blygold Polual treatment	Improved corrosion resistance, recommended for urban, industrial and rural environments	30RBS 039-160*
Condenser with pre-treated fins	3A	Fins made of pre-treated aluminium (polyurethane and epoxy)	Improved corrosion resistance, recommended for marine environments	30RBS 039-160*
Low temperature glycol solution	5B	Low temperature chilled water production down to 0°C with ethylene glycol and propylene glycol. Note: With option 5B the units are equipped with traditional coils (Cu/Al).	Covers specific applications down to 0°C	30 RBS 039-160
Very low temperature glycol solution	6B	Low temperature chilled water production down to -15°C with ethylene glycol and -12°C with propylene glycol. Note: With option 6B the units are equipped with traditional coils (Cu/Al).	Covers specific applications such as ice storage and industrial processes	30RBS 039-160
Very low noise level	15LS	Acoustic compressor enclosure and low-speed fans	Noise emission reduction at reduced fan speed	30RBS 039-160
Protection grilles	23	Metallic protection grilles	Coil protection against possible shocks	30RBS 039-160
Soft starter	25	Electronic compressor starter	Reduced compressor start-up current	30RBS 039-160
Winter operation**	28	Fan speed control via frequency converter	Stable unit operation when the air temperature is between -10°C and -20°C	30 RBS 039-160
Frost protection down to -20°C	42	Electric heater on the hydronic module	Hydronic module frost protection at low outside temperatures	30RBS 039-160
Partial heat reclaim	49	Partial heat reclaim by desuperheating of the compressor discharge gas. Note: With option 49 the units are equipped with traditional coils (Cu/Al).	Free high-temperature hot-water production simultaneously with chilled and hot-water production	30RBS 039-160
Master/slave operation	58	Unit equipped with an additional field-installed leaving water temperature sensor, allowing master/slave operation of two units connected in parallel	Operation of two units connected in parallel with operating time equalisation	30RBS 039-160
Main disconnect switch without fuse	70	Factory-installed main electric disconnect switch in the control box	Ease-of-installation and compliance with local electrical regulations	30RBS 039-160
HP single-pump hydronic module	116B	Single high-pressure water pump, water filter, expansion tank, temperature and pressure sensors. See hydronic module option.	Easy and fast installation	30RBS 039-160
HP dual-pump hydronic module	116C	Dual high-pressure water pump, water filter, expansion tank, temperature and pressure sensors. See hydronic module option.	Easy and fast installation, operating safety	30RBS 039-160

* 30RBS 039-160 with option 49 or 30RBS 0039-160 with option 6B.
** Winter operation option: This option allows operation of the unit down to -20°C outside air temperature due to the optimised control of the condensing temperature. One fan is equipped with a frequency converter.

Options	No.	Description	Advantages	Use 30RBS
LP single-pump hydronic module	116F	Single low-pressure water pump, water filter, expansion tank, temperature and pressure sensors. See hydronic module option.	Easy and fast installation	30RBS 039-160
LP dual-pump hydronic module	116G	Dual low-pressure water pump, water filter, expansion tank, temperature and pressure sensors. See hydronic module option.	Easy and fast installation, operating safety	30RBS 039-160
HP variable-speed single-pump hydronic module	116J	Single high-pressure water pump, water filter, expansion tank, temperature and pressure sensors. See hydronic module option.	Easy and fast installation, reduced power consumption of the water circulation pump	30RBS 039-160
HP variable-speed dual-pump hydronic module	116K	Dual high-pressure water pump, water filter, expansion tank, temperature and pressure sensors. See hydronic module option.	Easy and fast installation, operating safety, reduced power consumption of the water circulation pump	30RBS 039-160
HP single-pump hydronic module without expansion tank	116R	Single high-pressure water pump, water filter, temperature and pressure sensors. See hydronic module option.	Easy and fast installation	30RBS 039-160
HP dual-pump hydronic module without expansion tank	116S	Dual high-pressure water pump, water filter, temperature and pressure sensors. See hydronic module option.	Easy and fast installation, operating safety	30RBS 039-160
LP single-pump hydronic module	116T	Single low-pressure water pump, water filter, temperature and pressure sensors. See hydronic module option.	Easy and fast installation	30RBS 039-160
LP dual-pump hydronic module	116U	Dual low-pressure water pump, water filter, temperature and pressure sensors. See hydronic module option.	Easy and fast installation, operating safety	30RBS 039-160
High-pressure variable-speed single-pump hydronic module	116V	Single high-pressure water pump, water filter, temperature and pressure sensors. See hydronic module option.	Easy and fast installation, reduced power consumption of the water circulation pump	30RBS 039-160
HP variable-speed dual-pump hydronic module	116W	Dual high-pressure water pump, water filter, temperature and pressure sensors. See hydronic module option.	Easy and fast installation, operating safety, reduced power consumption of the water circulation pump	30RBS 039-160
JBus gateway	148B	Two-directional communications board, complies with JBus protocol	Easy connection by communication bus to a building management system	30RBS 039-160
Bacnet gateway	148C	Two-directional communications board, complies with Bacnet protocol	Easy connection by communication bus to a building management system	30RBS 039-160
LonTalk gateway	148D	Two-directional communications board, complies with Lon Talk protocol	Easy connection by communication bus to a building management system	30RBS 039-160
Enviro-Shield anti-corrosion protection	262	Coating by conversion process which modifies the surface of the aluminum producing a coating that is integral to the coil. Complete immersion in a bath to ensure 100% coverage. No heat transfer variation, tested 4000 hours salt spray per ASTM B117	Improved corrosion resistance, recommended for moderately corrosive marine and industrial environments.	30RBS 039-160
Super Enviro-Shield anti-corrosion protection	263	Extremely durable and flexible epoxy polymer coating applied on micro channel heat exchangers by electro coating process, final UV protective topcoat. Minimal heat transfer variation, tested 6000 hours constant neutral salt spray per ASTM B117, superior impact resistance per ASTM D2794	The Super Enviro-Shield option was developed to extend the application range of MCHE heat exchangers in very corrosive environmental conditions.	30RBS 039-160
Water heat exchanger screw connection sleeves	264	Inlet/outlet screw connection sleeves	Permit connection of the unit to a screw connection	30RBS 039-160
Welded evaporator water connection kit	266	Victaulic piping connections with welded joints	Permit connection of the unit to a connection other than a Victaulic connection	30RBS 039-160
Reinforced ECM filtration for fan VFD***	282A	Fan variable frequency drive compliance to IEC 61800-3 C1 class	Allows unit installation in domestic residential environment by reducing electromagnetic interferences	30RBS 039-160
Reinforced ECM filtration for pump VFD****	282B	Pump variable frequency drive compliance to IEC 61800-3 C1 class	Allows unit installation in domestic residential environment by reducing electromagnetic interferences	30RBS 039-160

*** 30RBS 039-160 with option 5B or 6B or 28
**** 30RBS 039-160 with option 116 J or K or V or W

Brine Options (option 5B & option 6B)

This option allows production of brine down to 0°C (option 5B) / -15°C (option 6B). The unit is equipped with suction pipe insulation (option 6B only) and a fan frequency converter.

Note: With options 5B & 6B the units are equipped with traditional coils (Cu/Al).

The operating range is a function of the suction pressure, which in turn is a function of:

- The brine type
- The brine concentration
- The flow rate
- The brine temperature
- The condensing pressure (ambient temperature).

Operating range with 45% ethylene glycol

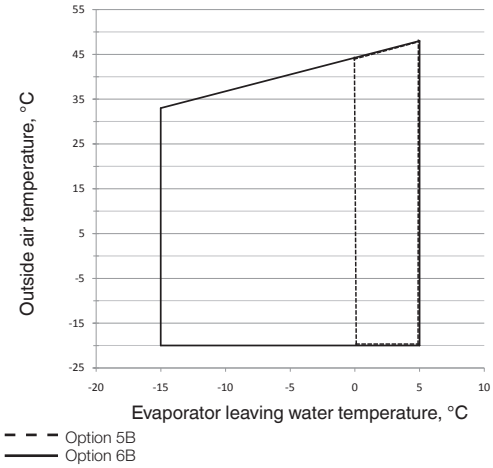

Partial heat reclaim using desuperheaters (option 49)

This option permits the production of free hot water using heat reclaim by desuperheating the compressor discharge gases. The option is available for the whole 30RBS range, that are equipped with traditional Cu/Al coils.

A plate heat exchanger is installed in series with the air condenser coils on the compressor discharge line of each circuit.

Physical data, 30RBS units with partial heat reclaim using desuperheaters (option 49)

30RBS partial heat reclaim mode		039	045	050	060	070	080	090	100	120	140	160
Operating weight units with RTPF coils*												
Standard unit without hydronic module	kg	467	475	498	524	512	543	849	859	890	1010	1074
Standard unit with hydronic module option												
Single high-pressure pump	kg	497	505	528	554	541	572	881	891	926	1049	1113
Dual high-pressure pump	kg	523	531	554	580	567	598	926	936	974	1086	1150
Refrigerant charge, units with RTPF coils		R-410A										
Circuit A	kg	8.0	9.0	12.5	15.0	12.5	15.0	19.0	20.0	23.0	12.5	16.0
Circuit B	kg	-	-	-	-	-	-	-	-	-	12.5	16.0
Condensers		Grooved copper tubes. aluminium fins										
Desuperheaters on circuits A and B		Plate heat exchangers										
Water volume, circuit A	l	0.549	0.549	0.549	0.549	0.732	0.732	0.976	0.976	0.976	0.732	0.732
Water volume, circuit B	l	-	-	-	-	-	-	-	-	-	0.732	0.732
Max. water-side operating pressure without hydronic module	kPa	1000	1000	1000	1000	1000	1000	1000	1000	1000	1000	1000
Water connections		Cylindrical, male gas thread										
Connections	in	1	1	1	1	1	1	1	1	1	1	1
Outside diameter	mm	42	42	42	42	42	42	42	42	42	42	42

* Weights shown are a guideline only.

Operating limits

Desuperheater		Minimum	Maximum
Entering water temperature at start-up	°C	25*	60
Leaving water temperature during operation	°C	30	65
Air condenser		**Minimum**	**Maximum**
Outside air temperature	°C	-10	46

* The entering water temperature at start-up must not be lower than 25°C. For installations with a lower temperature a three-way valve is necessary.

Hydronic module (option 116)

This module is equipped with pressure transducers to optimise unit operation at the hydronic level.

The hydronic module option reduces the installation time. The unit is factory-equipped with the main hydronic components required for the system: screen filter, water pump, expansion tank, safety valve and water pressure transducers.

The pressure transducers allow the Touch Pilot Junior control to:

- Display the available pressure at the unit outlet and the static system pressure
- Calculate the instantaneous flow rate, using an algorithm that integrates the unit characteristics
- Integrate the system and water pump protection devices (lack of water, water pressure, water flow rate etc.)

Several water pump types are available: primary single or dual low-pressure pump or single or dual high-pressure pump.

An automatic pump start-up algorithm protects the heat exchanger and the hydronic module piping against frost down to -10°C(30RBS) outside temperature, if the water heat exchanger frost protection option is installed. If necessary increased frost protection down to -20°C is possible by adding heaters to the hydronic module piping (see option 42).

The hydronic module option is integrated into the unit without increasing its dimensions and saves the space normally used for the water pump.

Typical hydronic circuit diagram

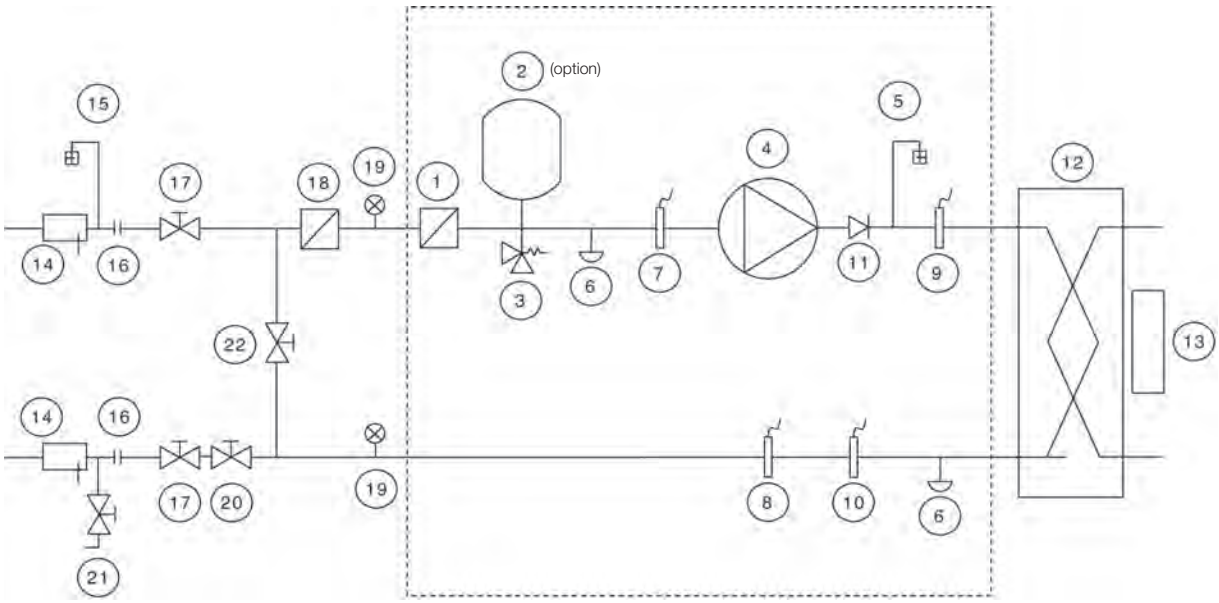

Legend

Components of the unit and hydronic module

1 Victaulic screen filter
2 Expansion tank (option)
3 Safety valve
4 Available pressure pump
Note: x 1 for a single pump, x 2 for a dual pump
5 Air purge
6 Water drain valve
Note: A second valve is located on the heat exchanger leaving piping
7 Pressure sensor
Note: Gives pump suction pressure information (see installation manual)
8 Temperature probe
Note: Gives heat exchanger leaving temperature information (see installation manual)
9 Temperature probe
Note: Gives heat exchanger entering temperature information (see installation manual)
10 Pressure sensor
Note: Gives unit leaving pressure information (see installation manual)
11 Check valve
Note: x 2 for a dual pump, not provided for a single pump
12 Plate heat exchanger
13 Water heat exchanger frost protection heater

Installation components

14 Temperature probe well
15 Air vent
16 Flexible connection
17 Shut-off valve
18 Screen filter (obligatory for a unit without hydronic module)
19 Pressure gauge
20 Water flow control valve
Note: Not necessary for a hydronic module with a variable-speed pump
21 Charge valve
22 Frost protection bypass valve (when shut-off valves [17] are closed during winter)

--Hydronic module (unit with hydronic module)

Electrical data, units with hydronic modules

The pumps that are factory-installed in these units have motors with efficiency class IE2. The additional electrical data required by regulation 640/2009 is given in the installation, operation and maintenance manual.

This regulation concerns the application of directive 2005/32/EC on the eco-design requirements for electric motors.

Variable water flow system (VWF)

Variable water flow is a hydronic control function package that permits control of the water flow rate.

The VWF not only ensures control at full load, a specific Carrier algorithm linked to an electronic frequency converter also continuously modulates the flow rate to minimise pump consumption at full load as well as part load.

The hydronic module includes pressure transducers that permit intelligent measurement of the water flow rate and real-time display on the Touch Pilot Junior interface. All adjust-ments can be made directly on the interface, speeding up start-up and maintenance.

As VWF acts directly on the pump, the system no longer requires the control valve at the unit outlet. However, for applications with two-way valves a bypass system must be kept to guarantee the minimum flow rate.

Operating logic

■ Full-load set point

The flow rate control at full load uses the Touch Pilot Junior interface, reducing the pump speed. This first control saves energy that would normally be dissipated in the control valve. For example, if the pressure supplied by the pump is reduced by 20% the power consumption of the pump is reduced by the same ratio, compared to a traditional installation.

■ Operating mode at part load

Touch Pilot Junior includes two part-load operating modes:

- Constant outlet pressure control
- Constant delta T control.

1 – Constant unit outlet pressure control

The control continuously acts on the pump speed to ensure a constant outlet pressure.

This solution is suitable for installations with two-way valves. When these close, the water speed will accelerate in the system branches that are still open. For a fixed-speed pump this results in an unnecessary increase of the pressure at the pump outlet.

The outlet pressure control mode ensures that each circuit branch always has a uniform supply, without unnecessary energy waste.

In industrial processes such as plastic injection moulding, this solution ensures that each terminal unit has the correct pressure supply.

2 – Constant delta T control

The VWF algorithm maintains a constant delta T no matter what the unit load, reducing the flow rate to the minimum.

This solution can be used for systems with two-way or three-way valves and achieves higher energy savings than the “Constant unit outlet pressure control” mode. It is suitable for the majority of comfort applications.

Features and advantages

Quiet operation

- Compressors
  - Low-noise scroll compressors with low vibration level
  - The compressor assembly is installed on an independent chassis and supported by anti-vibration mountings
  - Dynamic suction and discharge piping support, minimising vibration transmission (Carrier patent).
- Condenser (30RB)/air section
  - Vertical condenser coils
  - Protection grilles on anti-vibration mountings to protect the heat exchanger against possible shocks (optional on 30RB 039-160).
  - Low-noise latest-generation Flying Bird IV fans, made of a composite material (Carrier patent) are now even quieter and do not generate intrusive low-frequency noise
  - Rigid fan installation for reduced start-up noise (Carrier patent).

Easy and fast installation

- Integrated hydronic module (option)
  - Centrifugal low or high-pressure water pump (as required), based on the pressure loss of the hydronic installation

Hydronic module

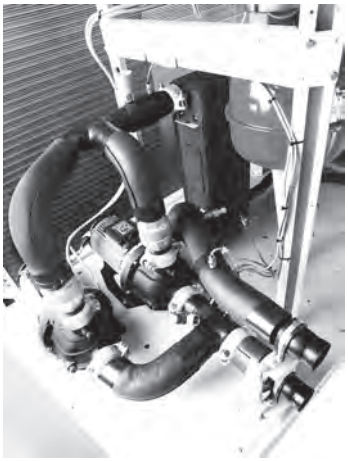

  - Single or dual water pump (as required) with operating time balancing and automatic changeover to the back-up pump if a fault develops
  - Water filter protects the pump against circulating debris
  - Pressure measurement, using two pressure transducers and allowing indication of water flow rate, water pressure and lack of water.
  - High-capacity membrane expansion tank ensures pressurisation of the water circuit
  - Overpressure valve, set to 4 bar
  - Speed variator on the pumps (option) to ensure the correct flow rate, based on the system requirements
  - Thermal insulation and frost protection down to -20°C, using an electric resistance heater (see table of options)
- Physical features
  - The unit has a small footprint and a low height (1330 mm) allowing it to blend in with any architectural styles.
  - The unit is enclosed by easily removable panels, covering all components (except air heat exchangers and fans).
- Simplified electrical connections
  - A single power supply point without neutral
  - Main disconnect switch (option 70) with high trip capacity
  - Transformer for safe 24 V control circuit supply included
- Fast commissioning
  - Systematic factory operation test before shipment
  - Quick-test function for step-by-step verification of the instruments, electrical components and motors.

Economical operation

- Optional variable-speed pump for economical operation
- The control algorithm adjusts the water flow rate based on the actual system requirements and obsoletes the need for the control valve at the unit outlet.
- Increased energy efficiency at part load
  - Eurovent energy efficiency class (in accordance with EN14511-3:2013) C and D in cooling mode and B and C in heating mode.
  - The refrigerant circuit includes several compressors connected in parallel. At part load, around 99% of the operating time, only the compressors that are absolutely necessary operate. At these conditions the compressors operating are more energy efficient, as they use the total condenser and evaporator capacity.
  - The electronic expansion device (EXV) allows operation at a lower condensing pressure (EER, COP and ESEER optimisation).
  - Dynamic superheat management for better utilisation of the water heat exchanger surface.
- Reduced maintenance costs
  - Maintenance-free scroll compressors
  - Fast diagnosis of possible incidents and their history via the Touch Pilot Junior control
  - R410A refrigerant is easier to use than other refrigerant blends.

Environmentally balanced

- Non-ozone depleting R410A refrigerant
  - Chlorine-free refrigerant of the HFC group with zero ozone depletion potential
  - Very efficient - gives an increased energy efficiency ratio (EER, COP and ESEER)
  - 50% reduction in the refrigerant charge through the use of micro-channel heat exchangers for the cooling only units (30RBS)
- Leak-tight refrigerant circuit
  - Brazed refrigerant connections for increased leak-tightness
  - Reduction of leaks due to reduced vibration levels and elimination of capillary tubes (TXVs)
  - Verification of pressure transducers and temperature sensors without transferring refrigerant charge.

Partial view of the hydronic circuit

Superior reliability

- State-of-the-art concept
  - Cooperation with specialist laboratories and use of limit simulation tools (finite element calculations) for the design of the critical components, e.g. motor supports, suction/discharge piping etc.
  - All aluminium micro-channel heat exchanger (MCHE) on cooling only units (30RBS), offers increased corrosion resistance compared to traditional coils. The all-aluminium design eliminates the formation of galvanic currents between aluminium and copper that cause coil corrosion.
- Auto-adaptive control
  - Control algorithm prevents excessive compressor cycling and permits reduction of the water quantity in the hydronic circuit (Carrier patent)
  - Hydronic module with integrated pressure transducers allowing measurement of the water pressure at two points, as well as measurement of the water flow rate and detection of lack of water and pressure. This considerably reduces the risk of problems such as frost accumulation on the water heat exchanger.
  - Automatic compressor unloading in case of abnormally high condensing pressure. If an anomaly occurs (e.g. fouled air heat exchanger coil, fan failure) AquaSnap continues to operate, but at reduced capacity.
- Exceptional endurance tests
  - Corrosion resistance tests in salt mist in the laboratory
  - Accelerated ageing test on components that are submitted to continuous operation: compressor piping, fan supports
  - Transport simulation test in the laboratory on a vibrating table.

Remote operating mode with volt-free contacts (standard)

A simple two-wire communication bus between the RS485 port of the AquaSnap and the Carrier Comfort Network offers multiple remote control, monitoring and diagnostic possibilities. Carrier offers a vast choice of control products, specially designed to control, manage and supervise the operation of an air conditioning system. Please consult your Carrier representative for more information on these products.

- Start/stop: Opening of this contact will shut down the unit
- Dual set point: Closing of this contact activates a second set point (example: unoccupied mode)
- Water pump 1 and 2 control (contacts supplied with the hydronic module option)*: These outputs control the contactors of one or two water heat exchanger water pumps
- Alarm indication: this volt-free contact indicates the presence of a major fault that has led to the shut-down of one or two refrigerant circuits
- Demand limit 1 and 2: Closing of these contacts limits the maximum unit capacity to three predefined values
- User safety: This contact can be used for any customer safety loop, closing of the contact generates a specific alarm
- Out of service: This signal indicates that the unit is completely out of service

All-aluminium micro-channel heat exchanger (MCHE)

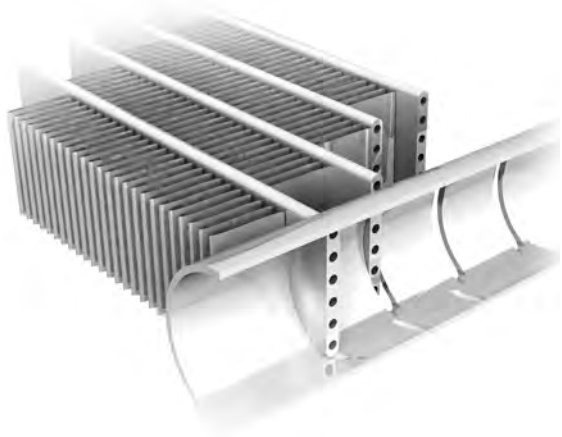

Already utilised in the automobile and aeronautical industries for many years, the MCHE micro-channel heat exchanger is entirely made of aluminium. This one-piece concept significantly increases its corrosion resistance by eliminating the galvanic currents that are created when two different metals (copper and aluminium) come into contact in traditional heat exchangers.

As an option, the Enviro-Shield and Super Enviro-Shield anti-corrosion protections have been developed to increase the application range of the MCHE coil from medium to very corrosive environments. With Enviro-Shield protection, corrosion resistance of the MCHE coil is doubled without any impact on heat exchange.

With Super Enviro-Shield protection corrosion resistance of the MCHE coil is multiplied by four, and allows use in very corrosive industrial or marine environments

The MCHE heat exchanger allows a reduction in chiller refrigerant charge by up to 50%.

The low thickness of the MCHE reduces air pressure losses by 50% and makes it less susceptible to fouling (e.g. by sand) than a traditional coil. Cleaning of the MCHE heat exchanger is very fast using a dry air jet or a high-pressure washer, while observing the usage precautions.

Controls

Touch Pilot Junior control

The Touch Pilot Junior features a control with advanced communication technology over Ethernet (IP), user-friendly and intuitive user interface with 4.3" colour touch screen.

- Energy management
  - Monitoring of the cooling and pumping energy use on Touch Pilot user interface with optional electricity meter
- Integrated advanced communication features
  - Easy and high-speed communication technology over Ethernet (IP) to a building management system
  - Access to multiple unit parameters.
- 4.3" Touch Pilot Junior user interface

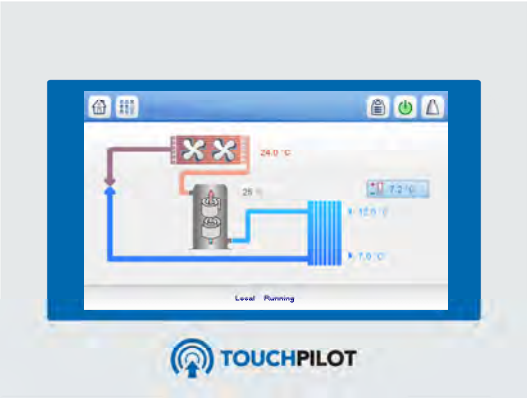

- Intuitive and user-friendly 4.3 inch touch screen interface
- Concise and clear information is available in local languages
- Complete menu, customised for different users (end user, service personnel or Carrier engineers).

Operating limits

Operating range

30RBS		Minimum	Maximum
Evaporator			
Entering water temperature at start-up	°C	7.5*	30
Leaving water temperature during operation	°C	5**	20
Entering/leaving water temperature difference	K	3	10
Condenser			
Entering air temperature, full load***	°C	-10	46
Entering air temperature, part load***	°C	-10	48
Hydronic module****			
Entering air temperature			
Kit without pump	°C	-20	-
Kit with pump (option 116x)	°C	-10	-
Kit with pump (option 116x) and frost protection option to -20°C (option 42)	°C	-20	-

Note: Do not exceed the maximum operating temperature.

* For entering water temperatures below 7.5°C at start-up, contact Carrier.
** For low-temperature applications, where the leaving water temperature is below 5°C, a frost protection solution must be used.
*** Ambient temperature: Please refer to option 20 for low-temperature applications (< -10°C). For transport and storage of the 30RBS units the minimum and maximum allowable temperatures are -20°C and +48°C. It is recommended that these temperatures are used for transport by container.
**** Defines the frost-free temperature of the hydronic components for use without glycol.

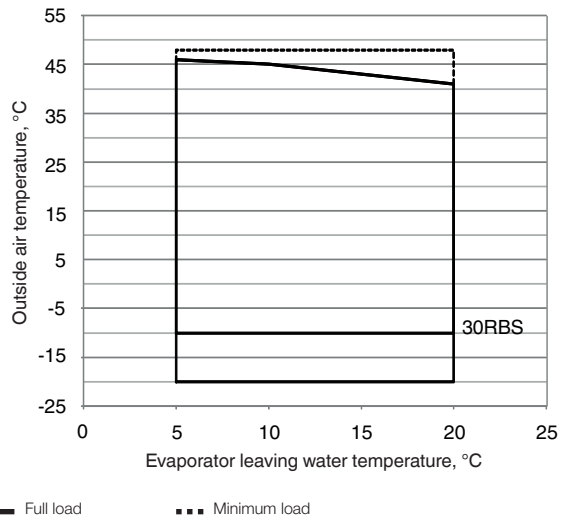

Note: This operating range applies up top 130 Pa static pressure without suction air duct for sizes 070 and 080 and 140-160, and up to 240 Pa for all other sizes.

Available external static pressure

Data applicable for:

- Fresh water 20 °C
- In case of use of glycol, the maximum water flow is reduced.

Low-pressure pump

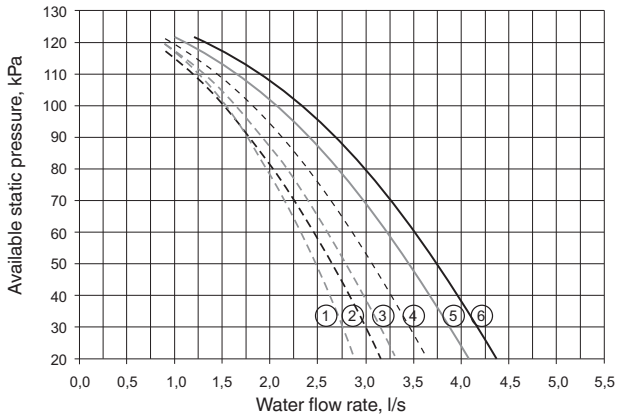

Legend

1. 30RBS 039
2. 30RBS 045
3. 30RBS 050
4. 30RBS 060
5. 30RBS 070
6. 30RBS 080

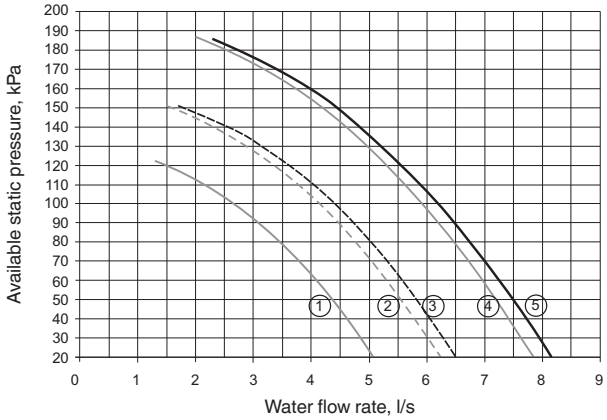

Legend

1. 30RBS 090
2. 30RBS 100
3. 30RBS 120
4. 30RBS 140
5. 30RBS 160

High-pressure pump

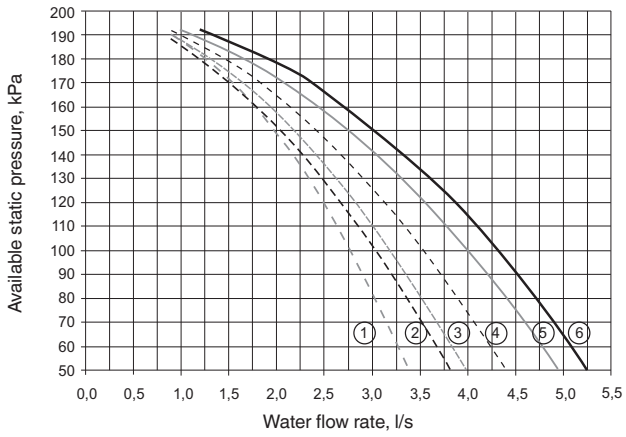

Legend

1. 30RBS 039
2. 30RBS 045
3. 30RBS 050
4. 30RBS 060
5. 30RBS 070
6. 30RBS 080

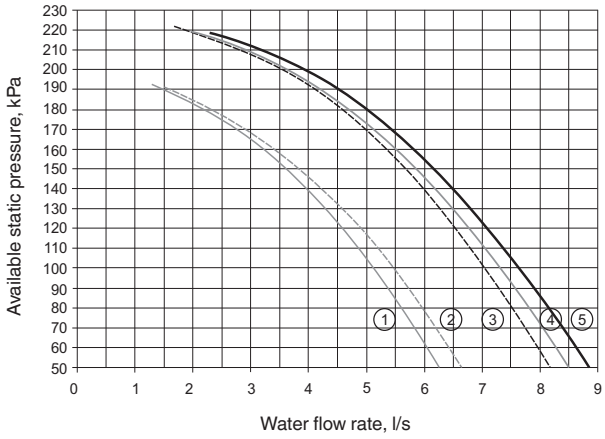

Legend

1. 30RBS 090
2. 30RBS 100
3. 30RBS 120
4. 30RBS 140
5. 30RBS 160

Dimensions/clearances

30RBS 039-080, units with and without hydronic module

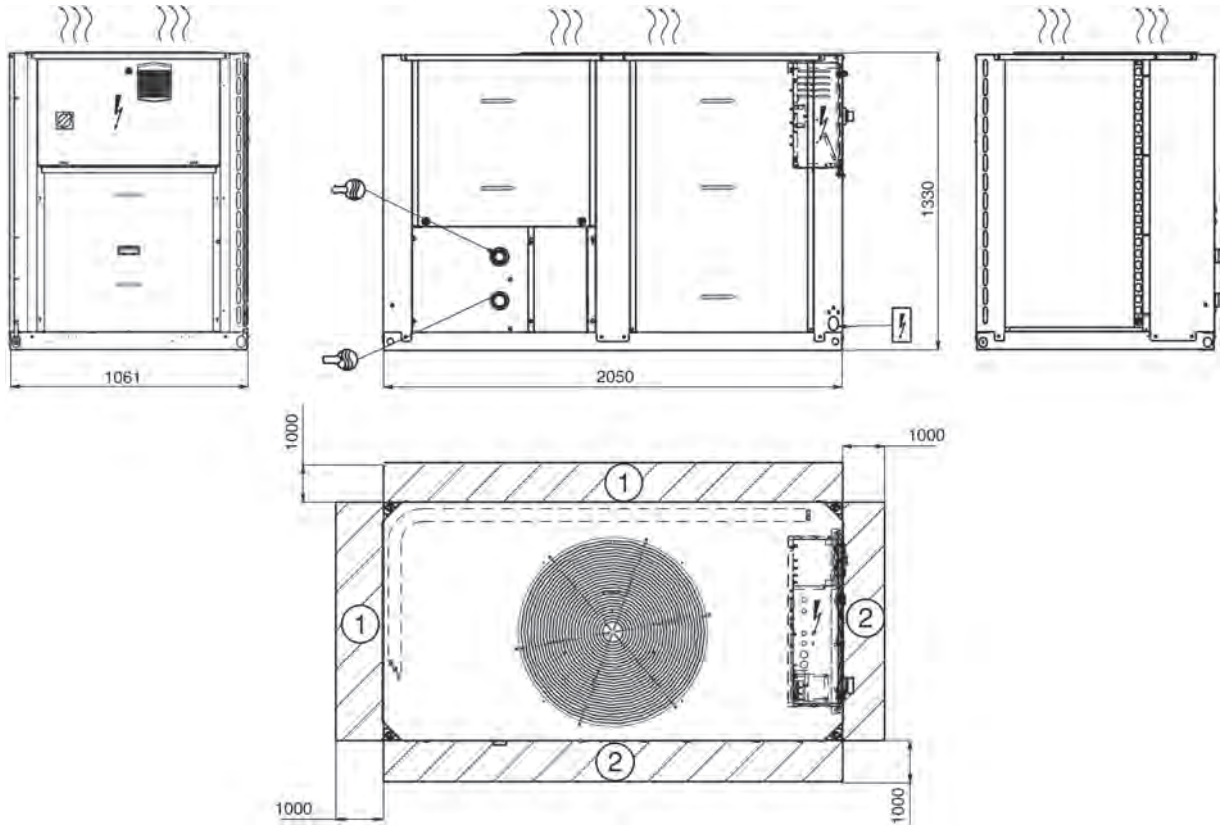

Legend:
All dimensions are given in mm

- Control box
- Water inlet
- Water outlet
- (1) Required clearances for air entry
- (2) Recommended space for maintenance
- Air outlet, do not obstruct
- Power supply inlet

Notes:

A Non-certified drawings.
Refer to the certified dimensional drawings supplied with the unit or available on request, when designing an installation.
For the location of fixing points, weight distribution and coordinates of the centre of gravity refer to the certified dimensional drawings.

B In multiple-chiller installations (maximum four units), the side clearance between the units should be increased from 1000 to 2000 mm.

C The height of the solid surface must not exceed 2 m.

Dimensions/clearances

30RBS 090-160, units with and without hydronic module

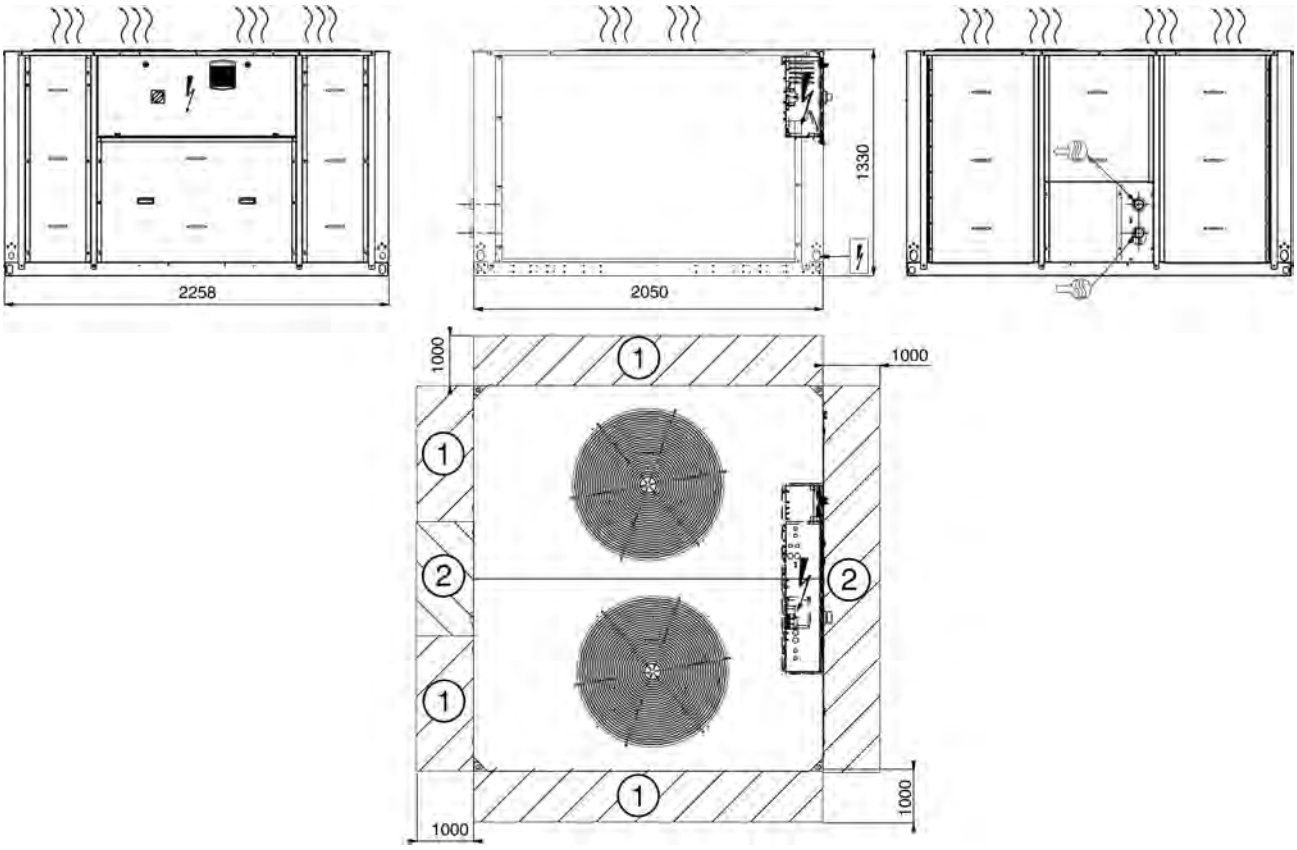

Legend:
All dimensions are given in mm

- Control box
- Water inlet
- Water outlet
- (1) Required clearances for air entry
- (2) Recommended space for maintenance
- Air outlet, do not obstruct
- Power supply inlet

Notes:

A Non-certified drawings.
Refer to the certified dimensional drawings supplied with the unit or available on request, when designing an installation.
For the location of fixing points, weight distribution and coordinates of the centre of gravity refer to the certified dimensional drawings.

B In multiple-chiller installations (maximum four units), the side clearance between the units should be increased from 1000 to 2000 mm.

C The height of the solid surface must not exceed 2 m.

Dimensions/clearances for units with option 49

Position of the desuperheater inlets and outlets

30RBS 039-080

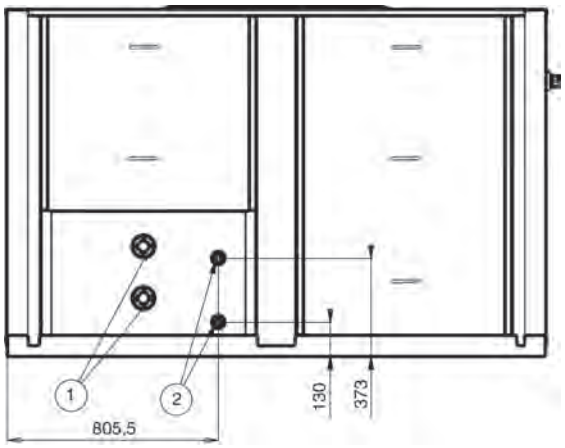

30RBS 090-120

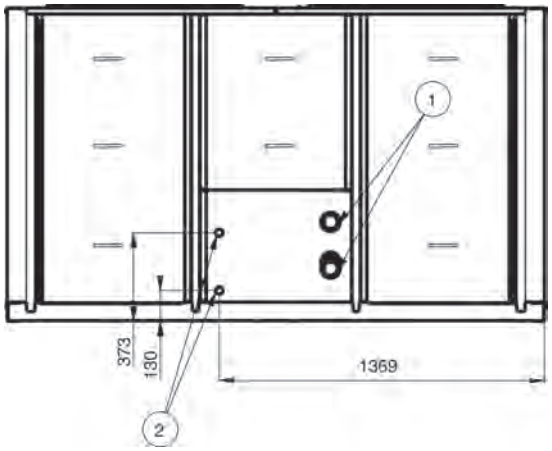

30RBS 140-160

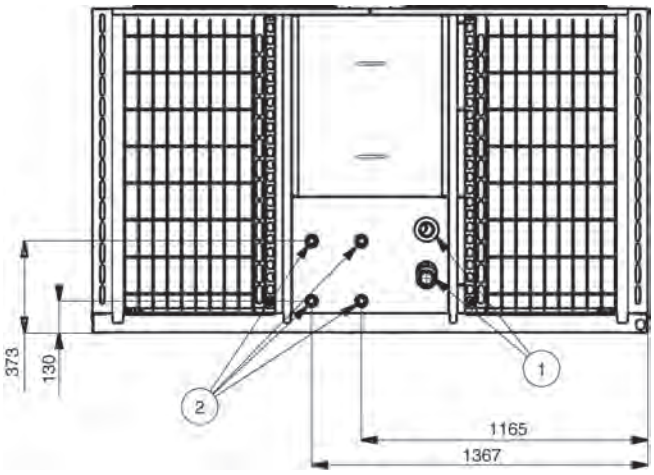

(1) Unit water inlet and outlet

(2) Water inlet and outlet, unit with option 49

30RBSY

Nominal cooling capacity 40-153 kW

AQUASNAP®

The AquaSnap liquid chiller was designed for commercial (air conditioning of offices, hotels etc.) or industrial (low-temperature process units etc.) applications.

Compact design

High static available pressure

Quiet operation

Variable speed fans

Variable water flow (optional)

It integrates the latest technological innovations:

- Non-ozone depleting refrigerant R410A
- All-aluminium microchannel heat exchangers
- Scroll compressors
- Low-noise fans made of a composite material
- Auto-adaptive microprocessor control
- Electronic expansion valve
- Variable-speed pump (option)

The AquaSnap can be equipped with a hydronic module integrated into the unit chassis, limiting the installation to straightforward operations like connection of the power supply and the chilled water supply and return piping.

Physical data

EUROVENT CERTIFIED PERFORMANCE
www.eurovent-certification.com

30RBSY		039	045	050	060	070	080	090	100	120	140	160
Cooling												
Air conditioning application as per EN14511-3:2013† - standard unit												
Condition 1:												
Nominal cooling capacity	kW	39.6	44.0	51.2	58.1	66.2	77.7	86.7	97.1	114.4	132.8	153.4
ESEER	kW/ kW	3.81	3.95	3.94	3.85	3.68	3.68	3.82	3.87	3.83	3.74	3.88
EER	kW/ kW	2.87	2.76	2.65	2.67	2.65	2.61	2.69	2.70	2.65	2.63	2.56
Eurovent class cooling		A	B	B	B	B	B	B	B	B	B	B
Condition 2:												
Nominal cooling capacity	kW	53.0	58.9	68.5	80.8	83.6	97.0	114.3	126.5	150.8	168.9	191.7
EER	kW/ kW	3.44	3.33	3.11	3.32	2.89	2.96	3.13	3.06	3.09	2.91	2.91
Air conditioning application†† - standard unit												
Condition 1:												
Nominal cooling capacity	kW	39.9	44.4	51.6	58.6	66.8	78.4	87.2	97.7	115.1	133.6	154.4
ESEER	kW/ kW	3.28	3.46	3.56	3.54	3.31	3.39	3.26	3.35	3.41	3.40	3.61
EER	kW/ kW	2.69	2.63	2.56	2.59	2.55	2.54	2.55	2.58	2.56	2.52	2.48
Condition 2:												
Nominal cooling capacity	kW	53.5	59.4	69.3	81.7	84.3	97.9	115.3	127.4	152.1	170.3	193.4
EER	kW/ kW	3.31	3.23	3.06	3.29	2.82	2.92	3.02	2.97	3.03	2.83	2.86
Sound levels												
Standard unit - for 160 Pa external static pressure												
Sound power level at discharge*	dB(A)	84	84	84	84	87	87	87	87	87	90	90
Sound power level radiated*	dB(A)	84	84	84	84	87	87	87	87	87	90	90
Sound pressure level at 10 m**	dB(A)	53	53	53	53	55	55	56	56	56	58	58
Dimensions		If two values are shown the first one is for standard units and the second one for units with option 23B										
Length	mm	2142/ 2307	2142/ 2307	2142/ 2307	2142/ 2307	2142/ 2307	2142/ 2307	2273	2273	2273	2273	2273
Width	mm	1132/ 1297	1132/ 1297	1132/ 1297	1132/ 1297	1132/ 1297	1132/ 1297	2122	2122	2122	2122	2122
Height	mm	1371	1371	1371	1371	1371	1371	1371	1371	1371	1371	1371
Operating weight with MCHE coil* **												
Standard unit without hydronic module	kg	436	443	449	464	461	480	771	780	793	901	932
Standard unit with hydronic module												
Single high-pressure pump	kg	466	473	479	494	491	510	803	812	829	940	971
Dual high-pressure pump	kg	491	499	504	520	517	536	848	857	877	977	1008
Compressors		Hermetic scroll compressors, 48.3 r/s										
Circuit A		2	2	2	2	2	2	3	3	3	2	2
Circuit B		-	-	-	-	-	-	-	-	-	2	2
No of control stages		2	2	2	2	2	2	3	3	3	4	4
Refrigerant charge with MCHE coil* **		R-410A										
Circuit A	kg	4.7	4.5	6.3	6.7	6.2	7.3	9.5	10.8	11.4	6.3	8
Circuit B	kg	-	-	-	-	-	-	-	-	-	6.3	8
Capacity control		Touch Pilot Junior										
Minimum capacity	%	50	50	50	50	50	50	33	33	33	25	25
Condensers		All-aluminium microchannel heat exchanger (MCHE)										
Fans		Axial Flying Bird IV with rotating shroud										
Quantity		1	1	1	1	1	1	2	2	2	2	2
Maximum total air flow	l/s	3885	3883	3687	3908	4982	5267	6940	6936	7370	9958	10534
Maximum rotation speed	r/s	16	16	16	18	18	18	16	16	16	16	16
Evaporator		Direct expansion. plate heat exchanger										
Water volume	l	2.6	3.0	3.3	4.0	4.8	5.6	8.7	9.9	11.3	12.4	14.7
Without hydronic module (option)												
Max. water-side operating pressure without hydronic module	kPa	1000	1000	1000	1000	1000	1000	1000	1000	1000	1000	1000
With hydronic module (option)												
Single or dual pump (as selected)		Pump, Victaulic screen filter, safety valve, expansion tank, purge valves (water + air), pressure sensors										
Expansion tank volume	l	12	12	12	12	12	12	35	35	35	35	35
Expansion tank pressure****	bar	1	1	1	1	1	1	1.5	1.5	1.5	1.5	1.5
Max. water-side operating pressure	kPa	400	400	400	400	400	400	400	400	400	400	400
Water connections with/without hydronic module		Victaulic										
Diameter	in	2	2	2	2	2	2	2	2	2	2	2
Outside diameter	mm	60.3	60.3	60.3	60.3	60.3	60.3	60.3	60.3	60.3	60.3	60.3
Chassis paint colour	Colour code: RAL7035											

† Eurovent-certified performances in accordance with standard EN14511-3:2013.
†† Gross performances, not in accordance with EN14511-3:2013. These performances do not take into account the correction for the proportionnal heating capacity and power input generated by the water pump to overcome the internal pressure drop in the heat exchanger.
Condition 1: cooling mode conditions: evaporator water entering/leaving temperature 12°C/7°C, outside air temperature 35°C, evaporator fooling factor 0 m².K/W
Condition 2: cooling mode conditions: evaporator water entering/leaving temperature 23°C/18°C, outside air temperature 35°C, evaporator fooling factor 0 m².K/W
* In dB ref=10-12 W, (A) weighting. Declared dualnumber noise emission values in accordance with ISO 4871 (with an associated uncertainty of +/-3dB(A)). Measured in accordance with ISO 9614-1 and certified by Eurovent.
** In dB ref 20µPa, (A) weighting. Declared dualnumber noise emission values in accordance with ISO 4871 (with an associated uncertainty of +/-3dB(A)). For information, calculated from the sound power level Lw(A).
*** Weight shown is a guideline only. Please refer to the unit nameplate.
**** When delivered, the standard pre-inflation of the tank is not necessarily the optimal value for the system. To permit changing the water volume, change the inflation pressure to a pressure that is close to the static head of the system. Fill the system with water (purging the air) to a pressure value that is 10 to 20 kPa higher than the pressure in the tank

Eurovent certified data

Electrical data

30RBS without hydronic module		039	045	050	060	070	080	090	100	120	140	160
Power circuit												
Nominal power supply	V-ph-Hz	400-3-50										
Voltage range	V	360-440										
Control circuit supply		24 V via internal transformer										
Maximum start-up current (Un)*												
Standard unit	A	116.8	137.4	145.4	148.4	176.4	213.4	178.8	212.8	252.8	243.8	286.8
Unit with electronic starter option	A	74.7	86.5	93.8	96.2	114.4	139.8	-	-	-	-	-
Unit power factor at maximum capacity**		0.83	0.81	0.81	0.83	0.81	0.78	0.83	0.81	0.79	0.81	0.78
Maximum operating power input**	kW	21.2	24.0	26.2	29.6	31.8	36.4	45.7	49.0	55.9	63.6	72.8
Nominal unit operating current draw***	A	28.2	31.6	35.6	38.6	42.8	53.2	60.6	66.9	82.5	85.6	106.4
Maximum operating current draw (Un)****		37.4	47.4	49.4	55.4	67.4	73.4	85.8	108.8	112.8	134.8	146.8
Maximum operating current draw (Un-10%)†		40.6	51.8	54.0	61.0	75.2	80.0	94.2	115.5	122.7	150.4	160.0
Customer-side unit power reserve		Customer reserve at the 24 V control power circuit										
Short-circuit stability and protection		See table “Short-circuit stability current” below										

* Maximum instantaneous start-up current at operating limit values (maximum operating current of the smallest compressor(s) + fan current + locked rotor current of the largest compressor).
** Power input, compressors and fans, at the unit operating limits (saturated suction temperature 10°C, saturated condensing temperature 65°C) and nominal voltage of 400 V (data given on the unit nameplate).
*** Standardised Eurovent conditions: evaporator entering/leaving water temperature 12°C/7°C, outside air temperature 35°C.
**** Maximum unit operating current at maximum unit power input and 400 V (values given on the unit nameplate).
† Maximum unit operating current at maximum unit power input and 360 V.

Options

Options	No.	Description	Advantages	Use 30RBSY
HP variable-speed dual-pump hydronic module	116K	Dual high-pressure water pump, water filter, expansion tank, temperature and pressure sensors. See hydronic module option.	Easy and fast installation, operating safety, reduced power consumption of the water circulation pump	30RBSY 039-160
HP single-pump hydronic module	116R	Single high-pressure water pump, water filter, electronic water flow control, pressure transducers. See hydronic module option chapter	Easy and fast installation (plug & play)	30RBSY 039-160
HP dual-pump hydronic module	116S	Dual high-pressure water pump, water filter, electronic water flow control, pressure transducers. See hydronic module option chapter	Easy and fast installation (plug & play)	30RBSY 039-160
LP single-pump hydronic module	116T	Single low-pressure water pump, water filter, electronic water flow control, pressure transducers. See hydronic module option chapter	Easy and fast installation (plug & play)	30RBSY 039-160
LP dual-pump hydronic module	116U	Dual low-pressure water pump, water filter, electronic water flow control, pressure transducers. See hydronic module option chapter	Easy and fast installation (plug & play)	30RBSY 039-160
HP variable-speed single-pump hydronic mod.	116V	Single high-pressure water pump with variable speed drive (VSD), water filter, electronic water flow control, pressure transducers. Multiple possibilities of water flow control. See hydronic module option chapter	Easy and fast installation (plug & play), significant pumping energy cost savings (more than two-thirds), tighter water flow control, improved sytem reliability	30RBSY 039-160
HP variable-speed dual-pump hydronic mod.	116W	Dual high-pressure water pump with variable speed drive (VSD), water filter, electronic flow switch, pressure transducers. Multiple possibilities of water flow control. See hydronic module option chapter	Easy and fast installation (plug & play), significant pumping energy cost savings (more than two-thirds), tighter water flow control, improved sytem reliability	30RBSY 039-160
J-Bus gateway	148B	Two-directional communication board complying with JBus protocol	Connects the unit by communication bus to a building management system	30RBSY 039-160
BacNet gateway	148C	Two-directional communication board complying with BacNet protocol	Easy connection by communication bus to a building management system	30RBSY 039-160
Lon gateway	148D	Two-directional communication board complying with Lon Talk protocol	Connects the unit by communication bus to a building management system	30RBSY 039-160
Enviro-Shield anti-corrosion protection	262	Coating by conversion process which modifies the surface of the aluminum producing a coating that is integral to the coil. Complete immersion in a bath to ensure 100% coverage. No heat transfer variation, tested 4000 hours salt spray per ASTM B117	Improved corrosion resistance, recommended for use in moderately corrosive environments	30RBSY 039-160
Super Enviro-Shield anti-corrosion protection	263	Extremely durable and flexible epoxy polymer coating applied on micro channel heat exchangers by electro coating process, final UV protective topcoat. Minimal heat transfer variation, tested 6000 hours constant neutral salt spray per ASTM B117, superior impact resistance per ASTM D2794	Improved corrosion resistance, recommended for use in extremely corrosive environments	30RBSY 039-160
Evaporator screw connection sleeves	264	Evaporator inlet/outlet screw connection sleeves	Allows unit connection to a screw connector	30RBSY 039-160
Welded evaporator water connection kit	266	Victaulic piping connections with welded joints	Easy installation	30RBSY 039-160
Reinforced ECM filtration for fan VFD	282A	Fan variable frequency drive compliance to IEC 61800-3 C1 class	Allows unit installation in domestic residential environment by reducing electromagnetic interferences	30RBSY 039-160
Reinforced ECM filtration for pump VFD	282B	Pump variable frequency drive compliance to IEC 61800-3 C1 class	Allows unit installation in domestic residential environment by reducing electromagnetic interferences	30RBSY 039-160
Power cable connection side extension	283	Side extension on the power control to allow a reduced cable bend radius	Use of thicker power cables	30RBSY 039-160

Options	No.	Description	Advantages	Use 30RBSY
Corrosion protection, traditional coils	2B	Factory application of Blygold Polual treatment on the copper/aluminium coils	Improved corrosion resistance, recommended for industrial, rural and marine environments	30RBSY 039-160
Corrosion protection, traditional coils	3A	Fins made of pre-treated aluminium (polyurethane and epoxy)	Improved corrosion resistance, recommended for moderate marine and urban environments	30RBSY 039-160
Medium-temperature brine solution	5B	Low temperature chilled water production down to 0°C with ethylene glycol and propylene glycol.	Covers specific applications such as ice storage and industrial processes	30RBSY 039-160
Low-temperature brine solution	6B	Low temperature chilled water production down to -15°C with ethylene glycol and -12°C with propylene glycol.	Covers specific applications such as ice storage and industrial processes	30RBSY 039-160
Very low noise level	15LS	Acoustic compressor enclosure and low-speed fans	Noise emission reduction at reduces fan speed	30RBSY 039-160
Protection grilles	23	Metallic protection grilles	Coil protection against possible shocks	30RBSY 039-160
Suction filter	23B	Washable G2 efficiency filter in accordance with EN 779	Prevents pollution of the air-heat exchanger	30RBSY 039-160
Soft Starter	25	Electronic starter on each compressor	Reduced start-up current	30RBSY 039-160
Frost protection down to -20°C	42	Electric heater on the hydronic module	Hydronic module frost protection at low outside temperatures	30RBSY 039-160
Partial heat recovery	49	Partial heat recovery by desuperheating of the compressor discharge gas. Note: With option 49 the units are equipped with traditional coils (Cu/Al).	Free high-temperature hot-water production simultaneously with chilled and hot-water production	30RBSY 039-160
Master/slave operation	58	Unit equipped with supplementary water outlet temperature sensor kit to be field-installed allowing master/slave operation of two units connected in parallel	Optimised operation of two chillers connected in parallel with operating time equalisation	30RBSY 039-160
Main disconnect switch without fuse	70	Factory-installed main electric disconnect switch in the control box	Ease-of-installation and compliance with local electrical regulations	30RBSY 039-160
HP single-pump hydronic module	116B	Single high-pressure water pump, water filter, expansion tank, temperature and pressure sensors. See hydronic module option.	Easy and fast installation	30RBSY 039-160
HP dual-pump hydronic module	116C	Dual high-pressure water pump, water filter, expansion tank, temperature and pressure sensors. See hydronic module option.	Easy and fast installation, operating safety	30RBSY 039-160
LP single-pump hydronic module	116F	Single low-pressure water pump, water filter, expansion tank, temperature and pressure sensors. See hydronic module option.	Easy and fast installation	30RBSY 039-160
LP dual-pump hydronic module	116G	Dual low-pressure water pump, water filter, expansion tank, temperature and pressure sensors. See hydronic module option.	Easy and fast installation, operating safety	30RBSY 039-160
HP variable-speed single-pump hydronic module	116J	Single high-pressure water pump, water filter, expansion tank, temperature and pressure sensors. See hydronic module option.	Easy and fast installation, reduced power consumption of the water circulation pump	30RBSY 039-160

Partial heat reclaim using desuperheaters (option 49)

This option permits the production of free hot water using heat reclaim by desuperheating the compressor discharge gases. The option is available for the whole 30RBSY range, that are equipped with traditional Cu/Al coils.

A plate heat exchanger is installed in series with the air condenser coils on the compressor discharge line of each circuit.

Hydronic module (option 116)

This module is equipped with pressure transducers to optimise unit operation at the hydronic level.

The hydronic module option reduces the installation time. The unit is factory-equipped with the main hydronic components required for the system: Screen filter, water pump, expansion tank, safety valve and water pressure transducers.

The pressure transducers allow the Touch Pilot Junior control to:

- Display the available pressure at the unit outlet and the static system pressure
- Calculate the instantaneous flow rate, using an algorithm that integrates the unit characteristics
- Integrate the system and water pump protection devices (lack of water, water pressure, water flow rate etc.)

Several water pump types are available: Primary single or dual low-pressure pump or single or dual high-pressure pump.

An automatic pump start-up algorithm protects the heat exchanger and the hydronic module piping against frost down to -10°C(30RBSY) outside temperature, if the water heat exchanger frost protection option is installed. If necessary increased frost protection down to -20°C is possible by adding heaters to the hydronic module piping (see option 42).

The hydronic module option is integrated into the unit without increasing its dimensions and saves the space normally used for the water pump.

Typical hydronic circuit diagram

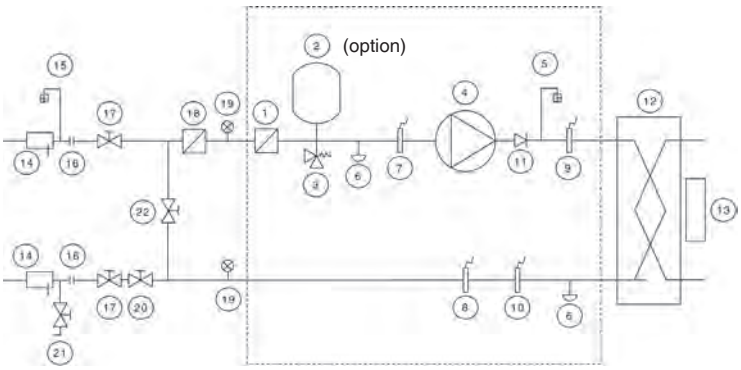

Legend

Components of the unit and hydronic module

1 Victaulic screen filter
2 Expansion tank (option)
3 Safety valve
4 Available pressure pump
Note: x 1 for a single pump, x 2 for a dual pump
5 Air purge
6 Water drain valve
Note: A second valve is located on the heat exchanger leaving piping
7 Pressure sensor
Note: Gives pump suction pressure information (see installation manual)
8 Temperature sensor
Note: Gives heat exchanger leaving temperature information (see installation manual)
9 Temperature sensor
Note: Gives heat exchanger entering temperature information (see installation manual)
10 Pressure sensor
Note: Gives unit leaving pressure information (see installation manual)
11 Check valve
Note: x 2 for a dual pump, not provided for a single pump
12 Plate heat exchanger
13 Water heat exchanger frost protection heater

Installation components

14 Temperature probe well
15 Air vent
16 Flexible connection
17 Shut-off valve
18 Screen filter (obligatory for a unit without hydronic module)
19 Pressure gauge
20 Water flow control valve
Note: Not necessary for a hydronic module with a variable-speed pump
21 Charge valve
22 Frost protection bypass valve (when shut-off valves [17] are closed during winter)

Notes:
- Units without hydronic module are equipped with a flow switch and two temperature sensors (8 and 9).
- The pressure sensors are installed on connections without Schrader valve.
- Depressurise and empty the system before any intervention.

Electrical data, units with hydronic modules

The pumps that are factory-installed in these units have motors with efficiency class IE2. The additional electrical data required by regulation 640/2009 is given in the installation, operation and maintenance manual.

This regulation concerns the application of directive 2005/32/EC on the eco-design requirements for electric motors.

Variable water flow system (VWF)

Variable water flow is a hydronic control function package that permits control of the water flow rate.

The VWF not only ensures control at full load, a specific Carrier algorithm linked to an electronic frequency converter also continuously modulates the flow rate to minimise pump consumption at full load as well as part load.

The hydronic module includes pressure transducers that permit intelligent measurement of the water flow rate and real-time display on the Touch Pilot Junior interface. All adjustments can be made directly on the interface, speeding up start-up and maintenance.

As VWF acts directly on the pump, the system no longer requires the control valve at the unit outlet. However, for applications with two-way valves a bypass system must be kept to guarantee the minimum flow rate.

Operating logic

- **Full-load set point**
  The flow rate control at full load uses the Touch Pilot Junior interface, reducing the pump speed. This first control saves energy that would normally be dissipated in the control valve. For example, if the pressure supplied by the pump is reduced by 20% the power consumption of the pump is reduced by the same ratio, compared to a traditional installation.
- Operating mode at part load
  Touch Pilot Junior includes two part-load operating modes:
  - Constant outlet pressure control
  - Constant delta T control.

1 – Constant unit outlet pressure control

The control continuously acts on the pump speed to ensure a constant outlet pressure.

This solution is suitable for installations with two-way valves. When these close, the water speed will accelerate in the system branches that are still open. For a fixed-speed pump this results in an unnecessary increase of the pressure at the pump outlet.

The outlet pressure control mode ensures that each circuit branch always has a uniform supply, without unnecessary energy waste.

In industrial processes such as plastic injection moulding, this solution ensures that each terminal unit has the correct pressure supply.

2 – Constant delta T control

The VWF algorithm maintains a constant delta T no matter what the unit load, reducing the flow rate to the minimum.

This solution can be used for systems with two-way or three-way valves and achieves higher energy savings than the “Constant unit outlet pressure control” mode. It is suitable for the majority of comfort applications.

Features and advantages

Quiet operation

- Compressors
  - Low-noise scroll compressors with low vibration level
  - The compressor assembly is installed on an independent chassis and supported by anti-vibration mountings
  - Dynamic suction and discharge piping support, minimising vibration transmission (Carrier patent)
- Condenser (30RBSY) section
  - Vertical condenser coils
  - Protection grilles on anti-vibration mountings to protect the heat exchanger against possible shocks (30RBSY 090-160 (optional)).
  - Low-noise latest-generation Flying Bird IV fans, made of a composite material (Carrier patent) are now even quieter and do not generate intrusive low-frequency noise
  - Fan motor controlled by a variable-frequency controller, to allow adjustment of the fan speed in accordance with the ducting for optimised efficiency.
  - Rigid fan installation for reduced start-up noise (Carrier patent)

Easy and fast installation

- Physical features
  - Flying Bird IV fans controlled by a variable-frequency controller to provide up to 240 Pa available pressure (depending on the size) at nominal flow rate
  - Flow control in accordance with the ducting for optimised efficiency with the possibility to program a maximum supply air flow.
  - Supply air duct connection frame.
  - Suction air connection frame standard for sizes 30RBSY 039-080
  - Suction air filters optional (30RBSY 039-080)
  - Small unit footprint with a low height (1371 mm) for easy installation in most buildings
  - The unit is enclosed by easily removable panels, covering all components (except air heat exchanger and fans).
- Integrated hydronic module (option)
  - Centrifugal low or high-pressure water pump (as required), based on the pressure loss of the hydronic installation.

Hydronic module

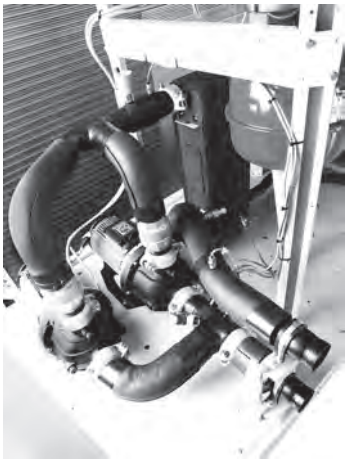

- Single or dual water pump (as required) with operating time balancing and automatic changeover to the back-up pump if a fault develops
- Water filter protects the water pump against circulating debris
- Pressure measurement, using two pressure transducers and allowing indication of water flow rate, water pressure and lack of water.
- High-capacity membrane expansion tank ensures pressurisation of the water circuit
- Overpressure valve, set to 4 bar
- Speed variator on the pumps (option) to ensure the correct flow rate, based on the system requirements
- Thermal insulation and frost protection down to -20°C, using an electric resistance heater (see table of options)

■ Simplified electrical connections
- A single power supply point without neutral
- Main disconnect switch (option 70) with high trip capacity
- Transformer for safe 24 V control circuit supply included

■ Fast commissioning
- Systematic factory operation test before shipment
- Quick-test function for step-by-step verification of the instruments, electrical components and motors

Economical operation

■ Variable-speed pump (option)
- The control algorithm adjusts the water flow rate in accordance with the actual system requirements. This saves energy and makes the flow control valve unnecessary.

■ Variable-speed fan
- Variable-speed ventilation permits adjustment to any duct type and variation of the air flow rate for maximised unit EERs and COPs under any operating conditions.

■ Increased energy efficiency at part load
- Eurovent energy efficiency class A and B in cooling mode and A in heating mode (in accordance with EN14511-3:2013)
- The refrigerant circuit includes several compressors connected in parallel. At part load, around 99% of the operating time, only the compressors that are absolutely necessary operate. At these conditions the compressors operating are more energy efficient, as they use the total condenser and evaporator capacity.
- The electronic expansion device (EXV) allows operation at a lower condensing pressure (EER, COP and ESEER optimisation).
- Dynamic superheat management for better utilisation of the water heat exchanger surface.
- Defrost cycle optimisation (30RQSY)

■ Reduced maintenance costs
- Maintenance-free scroll compressors
- Fast diagnosis of possible incidents and their history via the Touch Pilot Junior control
- R410A refrigerant is easier to use than other refrigerant blends

Environmentally balanced

■ Non-ozone depleting R410A refrigerant
- Chlorine-free refrigerant of the HFC group with zero ozone depletion potential
- Very efficient - gives an increased energy efficiency ratio (EER, COP and ESEER)
- 50% reduction in the refrigerant charge through the use of micro-channel heat exchangers for the cooling only units (30RBSY)

■ Leak-tight refrigerant circuit
- Brazed refrigerant connections for increased leak-tightness
- Reduction of leaks due to reduced vibration levels and elimination of capillary tubes (TXVs)
- Verification of pressure transducers and temperature sensors without transferring refrigerant charge

Supply air connection frame

Superior reliability

■ State-of-the-art concept
- Cooperation with specialist laboratories and use of limit simulation tools (finite element calculations) for the design of the critical components, e.g. motor supports, suction/discharge piping etc.
- All aluminium micro-channel heat exchanger (MCHE) on cooling only units (30RBSY), offers increased corrosion resistance compared to traditional coils. The all-aluminium design eliminates the formation of galvanic currents between aluminium and copper that cause coil corrosion.

■ Auto-adaptive control
- Control algorithm prevents excessive compressor cycling and permits reduction of the water quantity in the hydronic circuit (Carrier patent)
- Hydronic module with integrated pressure transducers allowing measurement of the water pressure at two points, as well as measurement of the water flow rate and detection of lack of water and pressure. This considerably reduces the risk of problems such as frost accumulation on the water heat exchanger.

- Automatic compressor unloading in case of abnormally high condensing pressure. If an anomaly occurs (e.g. fouled air heat exchanger coil, fan failure) AquaSnap continues to operate, but at reduced capacity.

■ Exceptional endurance tests
- Corrosion resistance tests in salt mist in the laboratory
- Accelerated ageing test on components that are submitted to continuous operation: compressor piping, fan supports
- Transport simulation test in the laboratory on a vibrating table.

All-aluminium micro-channel heat exchanger (MCHE)

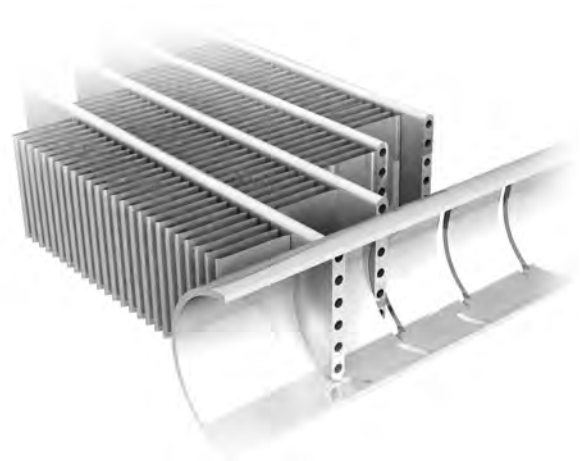

Already utilised in the automobile and aeronautical industries for many years, the MCHE micro-channel heat exchanger is entirely made of aluminium. This one-piece concept significantly increases its corrosion resistance by eliminating the galvanic currents that are created when two different metals (copper and aluminium) come into contact in traditional heat exchangers.

As an option, the Enviro-Shield and Super Enviro-Shield anti-corrosion protections have been developed to increase the application range of the MCHE coil from medium to very corrosive environments. With Enviro-Shield protection, corrosion resistance of the MCHE coil is doubled without any impact on heat exchange.

With Super Enviro-Shield protection corrosion resistance of the MCHE coil is multiplied by four, and allows use in very corrosive industrial or marine environments

The MCHE heat exchanger allows a reduction in chiller refrigerant charge by up to 50%.

The low thickness of the MCHE reduces air pressure losses by 50% and makes it less susceptible to fouling (e.g. by sand) than a traditional coil. Cleaning of the MCHE heat exchanger is very fast using a dry air jet or a high-pressure washer, while observing the usage precautions.

Controls

Touch Pilot Junior control

The Touch Pilot features a control with advanced communication technology over Ethernet (IP), user-friendly and intuitive user interface with 4.3” colour touch screen.

■ Energy management
- Monitoring of the cooling and pumping energy use on Touch Pilot Junior user interface with optional electricity meter

■ Integrated advanced communication features
- Easy and high-speed communication technology over Ethernet (IP) to a building management system
- Access to multiple unit parameters.

■ 4.3” Touch Pilot Junior user interface

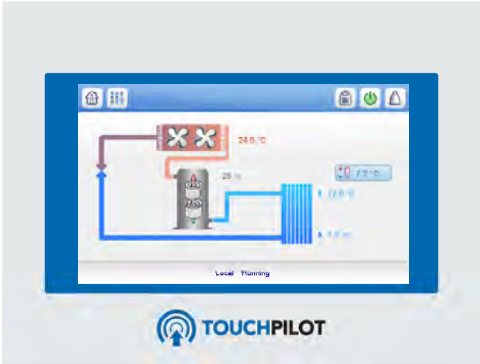

- Intuitive and user-friendly 4.3 inch touch screen interface
- Concise and clear information is available in local languages
- Complete menu, customised for different users (end user, service personnel or Carrier engineers).

Carrier Comfort Network (CCN) operating mode

A simple two-wire communication bus between the RS485 port of the AquaSnap and the Carrier Comfort Network offers multiple remote control, monitoring and diagnostic possibilities. Carrier offers a vast choice of control products, specially designed to control, manage and supervise the operation of an air conditioning system. Please consult your Carrier representative for more information on these products.

Remote operating mode with dry contacts (standard)

- Start/stop: Opening of this contact will shut down the unit
- Dual set point: Closing of this contact activates a second set point (example: unoccupied mode)
- Water pump 1 and 2 control (contacts supplied with the hydronic module option)*: These outputs control the contactors of one or two water heat exchanger water pumps
- Alarm indication: this volt-free contact indicates the presence of a major fault that has led to the shut-down of one or two refrigerant circuits
- Demand limit 1 and 2: Losing of these contacts limits the maximum unit capacity to three predefined values
- User safety: This contact can be used for any customer safety loop, closing of the contact generates a specific alarm

Operating limits

Evaporator water flow rate

30RBSY	Flow rate, l/s			
	Minimum	Maximum*	Maximum dual pump**	
			Low pressure***	High pressure***
039	0.9	3.0	2.9	3.4
045	0.9	3.4	3.2	3.8
050	0.9	3.7	3.3	4.0
060	0.9	4.2	3.7	4.4
070	1.0	5.0	4.1	5.0
080	1.2	5.5	4.4	5.2
090	1.3	6.8	5.1	6.2
100	1.5	7.7	6.3	6.5
120	1.7	8.5	6.5	8.0
140	2.0	10.6	7.9	8.7
160	2.3	11.2	8.2	8.9

* Maximum flow rate at a pressure drop of 100 kPa in the plate heat exchanger (unit without hydronic module).
** Maximum flow rate at an available pressure of 20 kPa (unit with low-pressure hydronic module) or 50 kPa (high-pressure module).
*** Maximum flow rate with single pump is 2 to 4% higher, depending on the size.

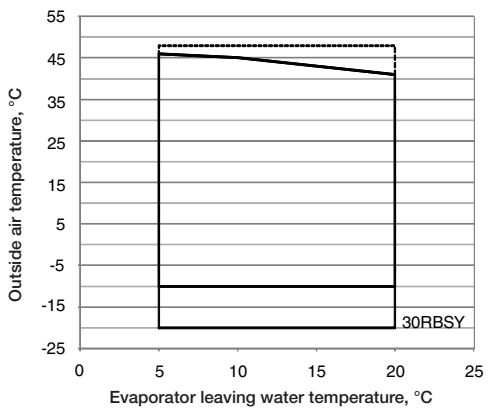

Full load ▪▪▪ Minimum load

Note: This operating range applies up top 130 Pa static pressure without suction air duct for sizes 070-080 and 140-160, and up to 240 Pa for all other sizes.

Operating range

30RBSY		Minimum	Maximum
Evaporator			
Entering water temperature at start-up	°C	7.5*	30
Leaving water temperature during operation	°C	5**	20
Entering/leaving water temperature difference	K	3	10
Condenser			
Entering air temperature, full load***	°C	-20	46
Entering air temperature, part load***	°C	-20	48
Hydronic module****			
Entering air temperature			
Kit without pump	°C	-20	-
Kit with pump (option 116x)	°C	-10	-
Kit with pump (option 116x) and frost protection option to -20°C (option 42)	°C	-20	-

Note: Do not exceed the maximum operating temperature.

* For entering water temperatures below 7.5°C at start-up, contact Carrier.
** For low-temperature applications, where the leaving water temperature is below 5°C, a frost protection solution must be used.
*** For transport and storage of the 30RBSY units the minimum and maximum allowable temperatures are -20°C and +48°C. It is recommended that these temperatures are used for transport by container.
**** Defines the frost-free temperature of the hydronic components for use without glycol.

Available external static pressure

Data applicable for:

- Fresh water 20 °C
- In case of use of the glycol, the maximum water flow is reduced.

Low-pressure pump

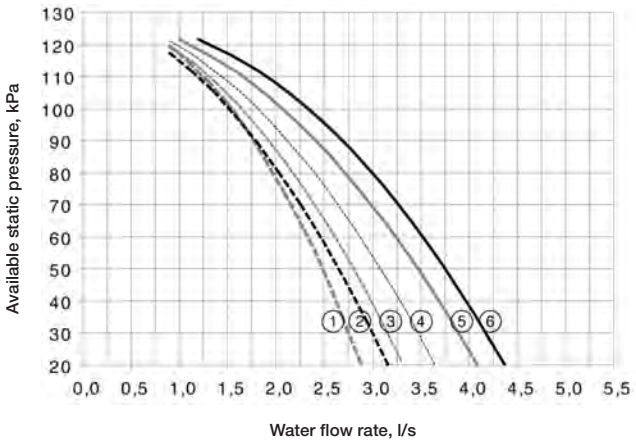

Legend

1. 30RBSY 039
2. 30RBSY 045
3. 30RBSY 050
4. 30RBSY 060
5. 30RBSY 070
6. 30RBSY 080

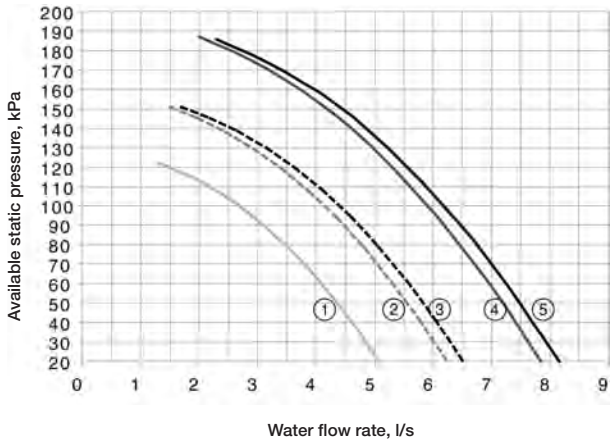

Legend

1. 30RBSY 090
2. 30RBSY 100
3. 30RBSY 120
4. 30RBSY 140
5. 30RBSY 160

High-pressure pump

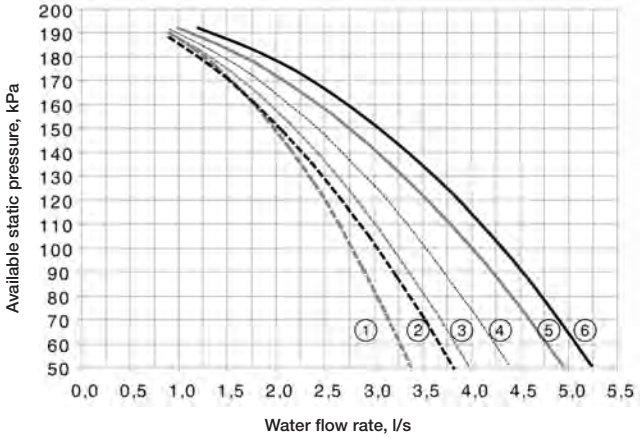

Legend

1. 30RBSY 039
2. 30RBSY 045
3. 30RBSY 050
4. 30RBSY 060
5. 30RBSY 070
6. 30RBSY 080

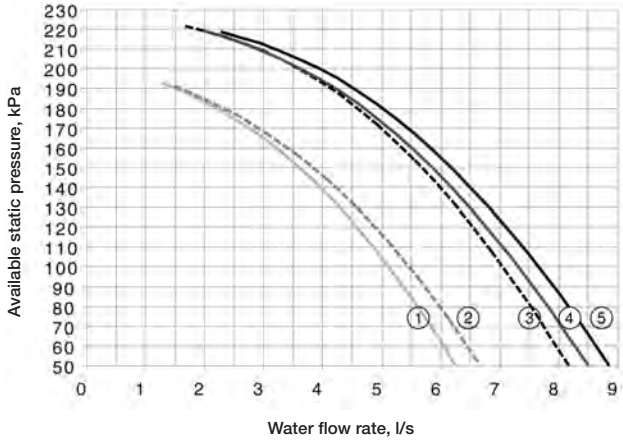

Legend

1. 30RBSY 090
2. 30RBSY 100
3. 30RBSY 120
4. 30RBSY 140
5. 30RBSY 160

Air pressure drop

Selection of a ductable unit

The 30RBSY ranges are designed for indoor installation in a plant room. For this type of installation the cold or hot air leaving the air-cooled air heat exchangers is discharged by the fans to the outside of the building, using a duct system.

The units are equipped with fans with available pressure, designed to operate with air discharge ducts with maximum pressure drops of 180 Pa or 240 Pa on certain sizes.

To compensate for these pressure drops this range of ductable units equipped with variable-speed fans with a maximum speed of 19 r/s.

In the cooling mode, the full-load or part-load speed is controlled by a patented algorithm that permanently optimises the condensing temperature to ensure the best unit energy efficiency (EER) whatever the operating conditions and pressure drops of the system ductwork.

In the heating mode, the full-load or part-load speed of each circuit is fixed and at the configured maximum (range configurable from 12 r/s to 19 r/s) based on the constraints and characteristics of the installation site. The maximum configured speed applies to both the heating and cooling mode.

Each refrigerant circuit (A and B) must have a separate ducting system to prevent any air recycling between the air heat exchangers of the different refrigerant circuits.

Selection based on the pressure drop

The cooling and heating capacities are given for an available pressure of 160 Pa and for a unit without filter.

To calculate the performances at other pressure drops please use the correction factors below.

Cooling mode

30RBSY 039-060/30RBSY 090-120

Duct pressure drop	Fan speed, r/s	Power input coefficient	Cooling capacity coefficient
0	12.00	0.943	1.019
50	13.33	0.962	1.012
100	14.66	0.980	1.006
130	15.46	0.990	1.003
160	16.26	1.000	1.000
200	17.31	1.012	0.998
240	18.36	1.023	0.996

30RBSY 070-080/30RBSY 140-160

Duct pressure drop	Fan speed, r/s	Power input coefficient	Cooling capacity coefficient
0	15.83	0.929	1.018
50	16.81	0.944	1.016
100	17.78	0.964	1.014
130	18.36	0.978	1.011
160	18.36	1.000	1.000
180	18.36	1.019	0.991

Dimensions/clearances

30RBSY 039-050 and 070, units with and without hydronic module, without filter frame

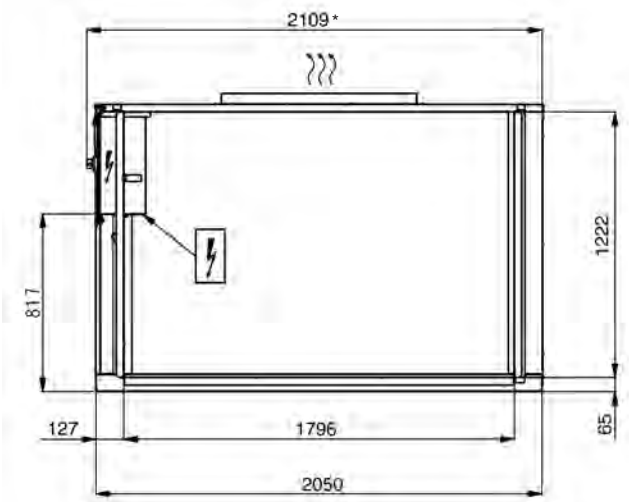

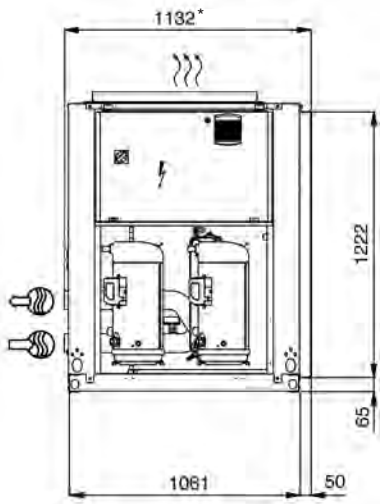

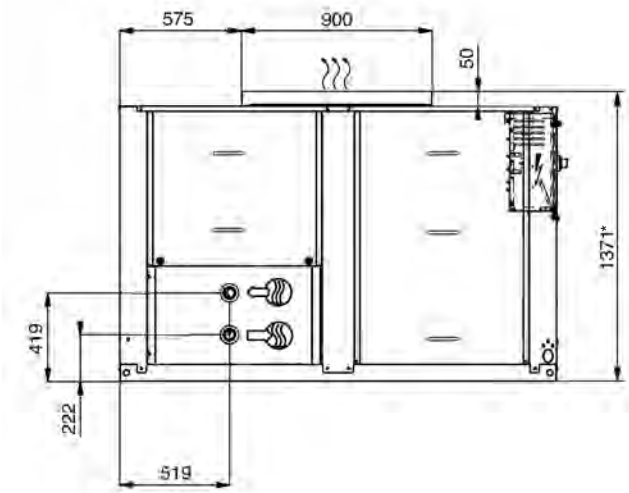

Legend:
All dimensions are given in mm

- Control box
- Water inlet
- Water outlet
- (1) Required clearances for air entry
- (2) Recommended space for maintenance
- Air outlet, do not obstruct
- Power supply inlet

* Overall dimensions

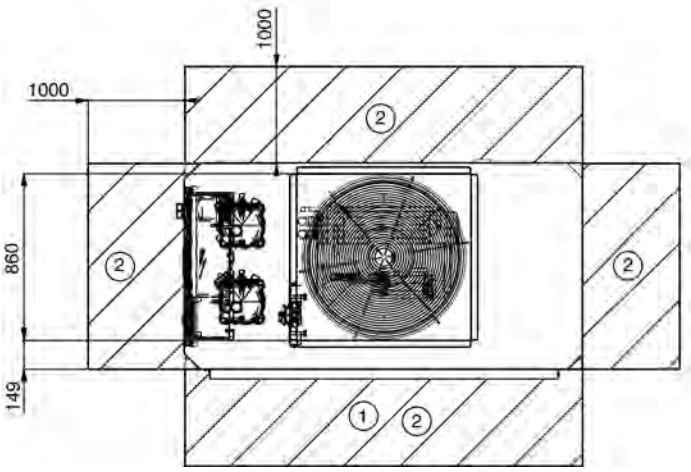

Notes:

A Non-certified drawings.
Refer to the certified dimensional drawings supplied with the unit or available on request, when designing an installation. For the location of fixing points, weight distribution and coordinates of the centre of gravity refer to the certified dimensional drawings.

B Provide a gutter around the unit to collect the condensate water or install the accessory condensate collection pan.

C The unit must be installed level (less than 2 mm per metre deviation in both axes).

D Units are equipped with a sleeve on the air heat exchanger side to allow connection of a suction air frame.

30RBSY 039-050 and 070, option 23B, units with and without hydronic module, with filter frame

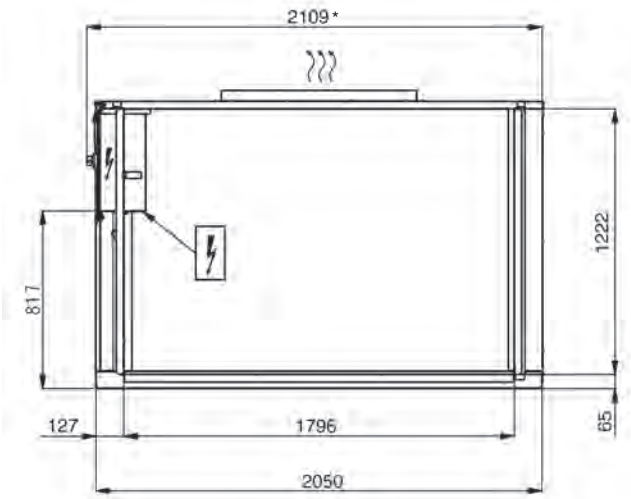

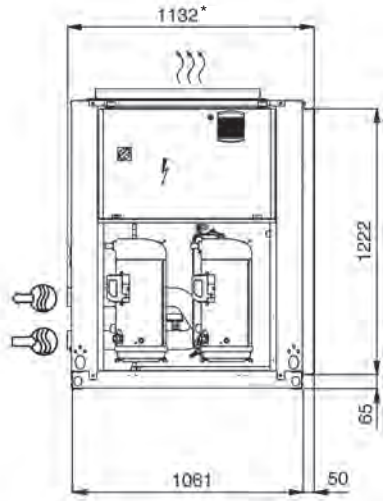

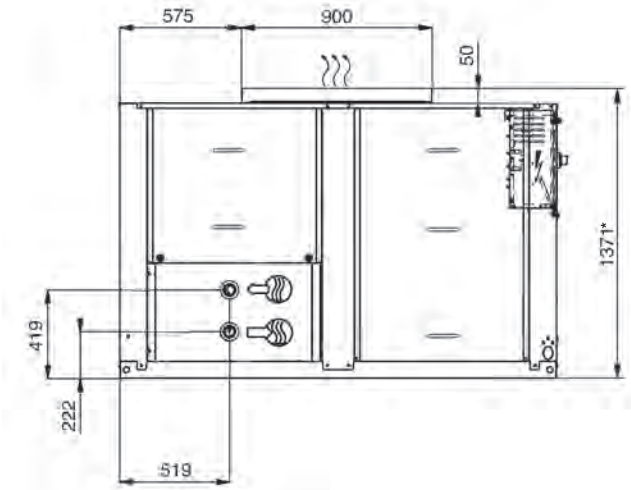

Legend:
All dimensions are given in mm

- Control box
- Water inlet
- Water outlet
- (1) Required clearances for air entry
- (2) Recommended space for maintenance
- Air outlet, do not obstruct
- Power supply inlet

* Overall dimensions

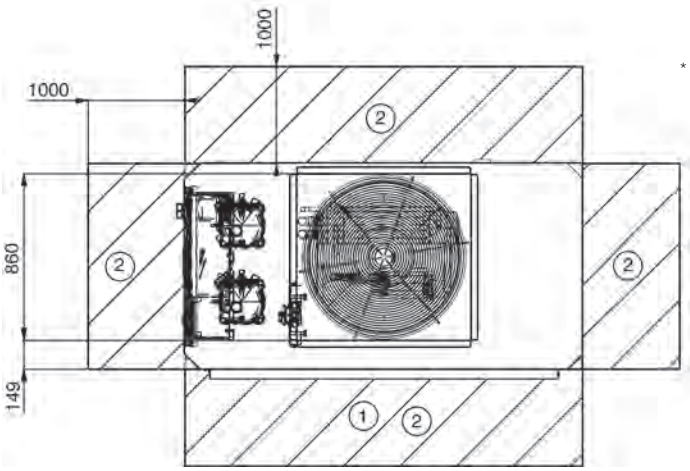

Notes:

A Non-certified drawings.
Refer to the certified dimensional drawings supplied with the unit or available on request, when designing an installation. For the location of fixing points, weight distribution and coordinates of the centre of gravity refer to the certified dimensional drawings.

B Provide a gutter around the unit to collect the condensate water or install the accessory condensate collection pan.

C The unit must be installed level (less than 2 mm per metre deviation in both axes).

D Units are equipped with a sleeve on the air heat exchanger side to allow connection of a suction air frame.

30RBSY 060 and 080, units with and without hydronic module, without filter frame

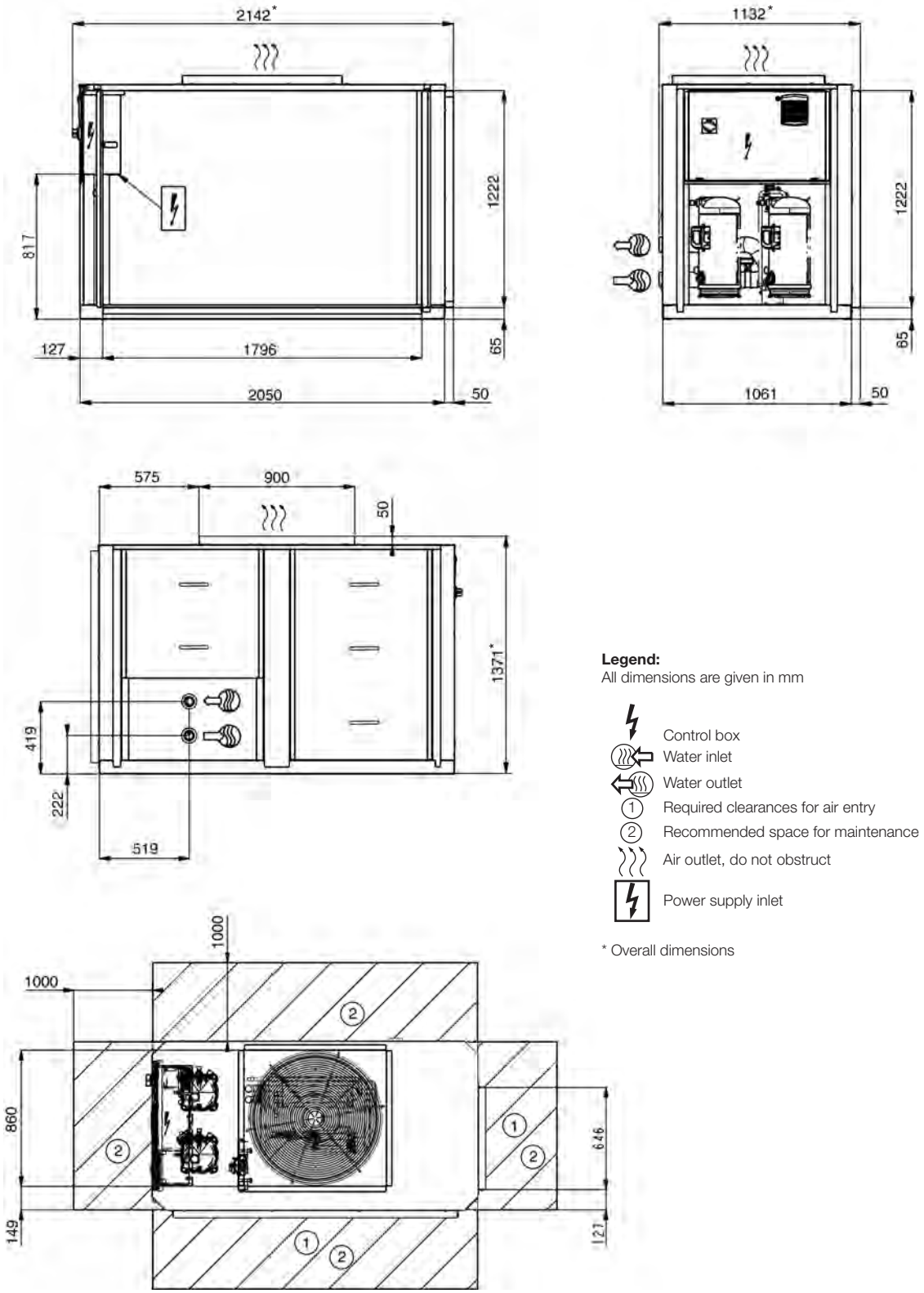

Legend:
All dimensions are given in mm

- Control box
- Water inlet
- Water outlet
- (1) Required clearances for air entry
- (2) Recommended space for maintenance
- Air outlet, do not obstruct
- Power supply inlet

* Overall dimensions

Notes:

A Non-certified drawings.
Refer to the certified dimensional drawings supplied with the unit or available on request, when designing an installation. For the location of fixing points, weight distribution and coordinates of the centre of gravity refer to the certified dimensional drawings.

B Provide a gutter around the unit to collect the condensate water or install the accessory condensate collection pan.

C The unit must be installed level (less than 2 mm per metre deviation in both axes).

D Units are equipped with a sleeve on the air heat exchanger side to allow connection of a suction air frame.

30RBSY 060 and 080, option 23B, units with and without hydronic module, with filter frame

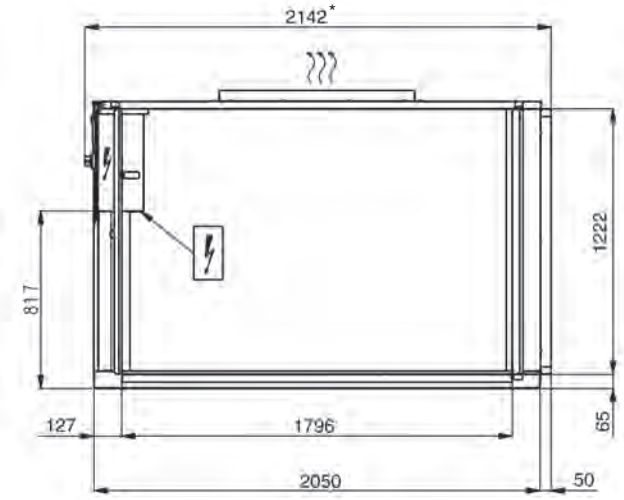

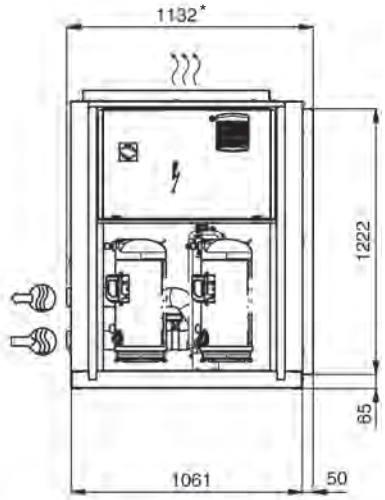

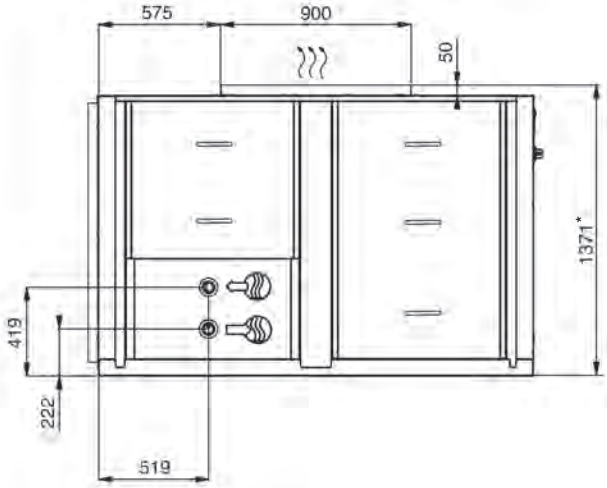

Legend:
All dimensions are given in mm

- Control box
- Water inlet
- Water outlet
- (1) Required clearances for air entry
- (2) Recommended space for maintenance
- Air outlet, do not obstruct
- Power supply inlet

* Overall dimensions

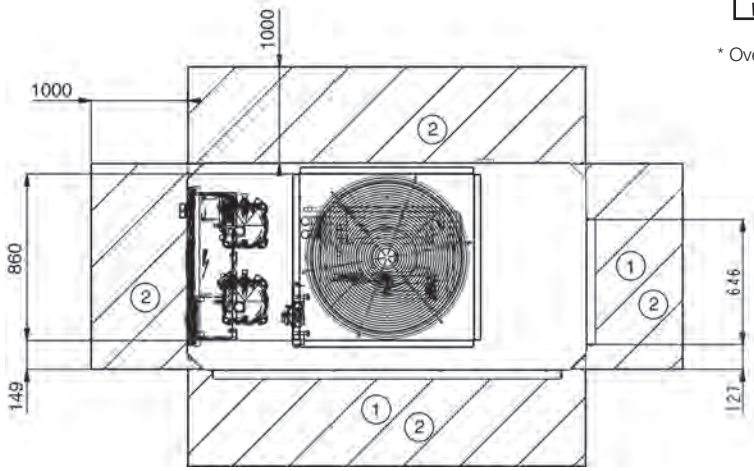

Notes:

A Non-certified drawings.
Refer to the certified dimensional drawings supplied with the unit or available on request, when designing an installation. For the location of fixing points, weight distribution and coordinates of the centre of gravity refer to the certified dimensional drawings.

B Provide a gutter around the unit to collect the condensate water or install the accessory condensate collection pan.

C The unit must be installed level (less than 2 mm per metre deviation in both axes).

D Units are equipped with a sleeve on the air heat exchanger side to allow connection of a suction air frame.

30RBSY 090-120 units with and without hydronic module

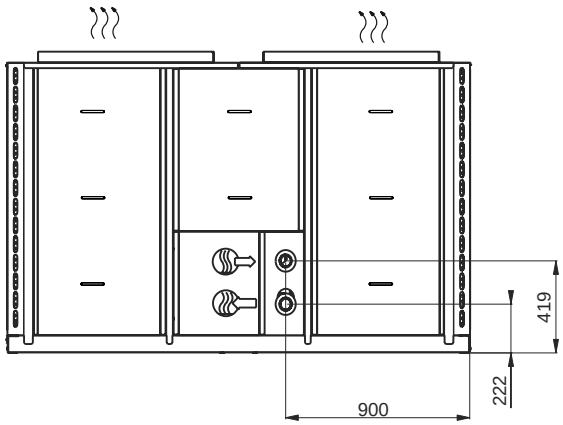

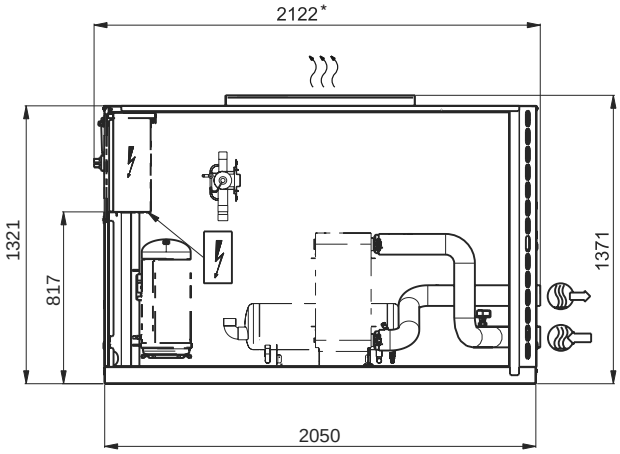

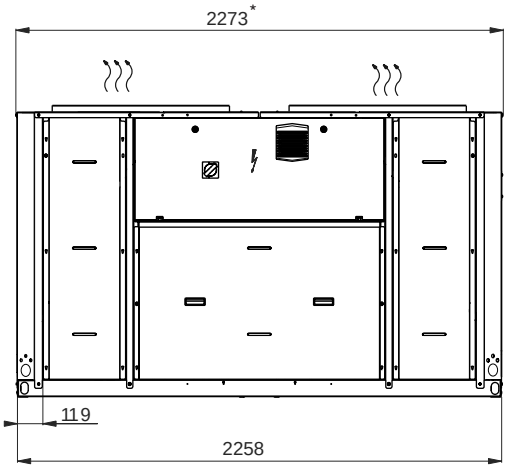

Legend:
All dimensions are given in mm

- Control box
- Water inlet
- Water outlet
- (1) Required clearances for air entry
- (2) Recommended space for maintenance
- Air outlet, do not obstruct
- Power supply inlet

* Overall dimensions

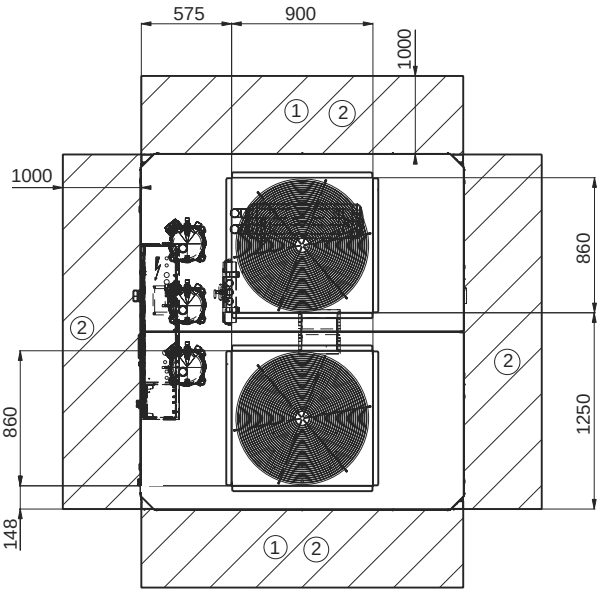

Notes:

A Non-certified drawings.
Refer to the certified dimensional drawings supplied with the unit or available on request, when designing an installation. For the location of fixing points, weight distribution and coordinates of the centre of gravity refer to the certified dimensional drawings.

B Provide a gutter around the unit to collect the condensate water or install the accessory condensate collection pan.

C The unit must be installed level (less than 2 mm per metre deviation in both axes).

D Units are equipped with a sleeve on the air heat exchanger side to allow connection of a suction air frame.

30RBSY 140-160 units with and without hydronic module

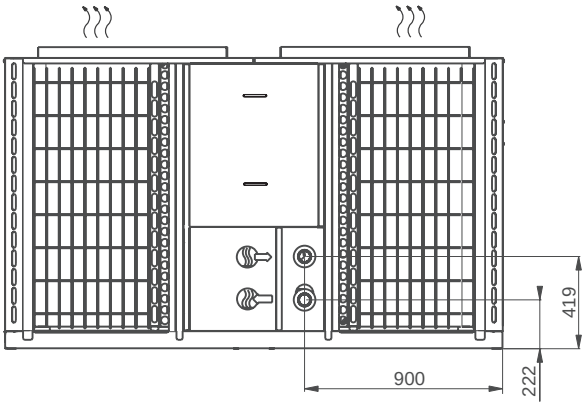

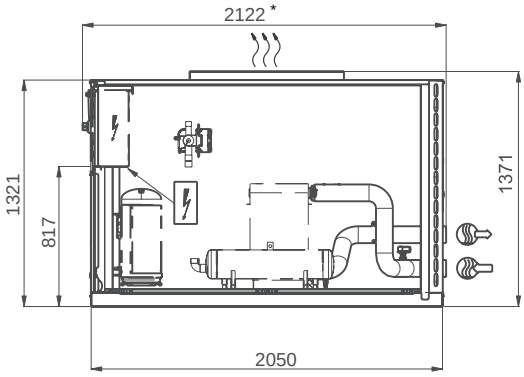

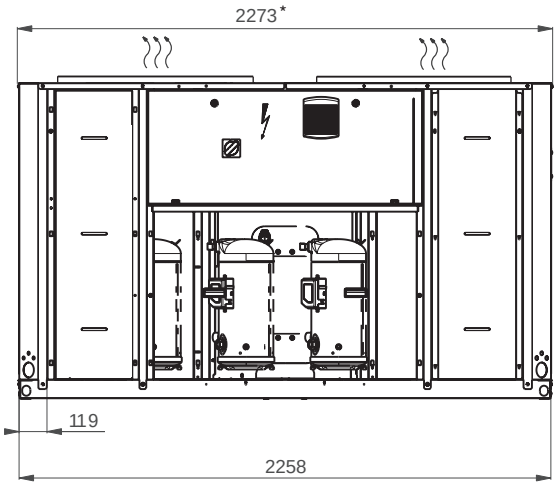

Legend:
All dimensions are given in mm

- Control box
- Water inlet
- Water outlet
- (1) Required clearances for air entry
- (2) Recommended space for maintenance
- Air outlet, do not obstruct
- Power supply inlet

* Overall dimensions

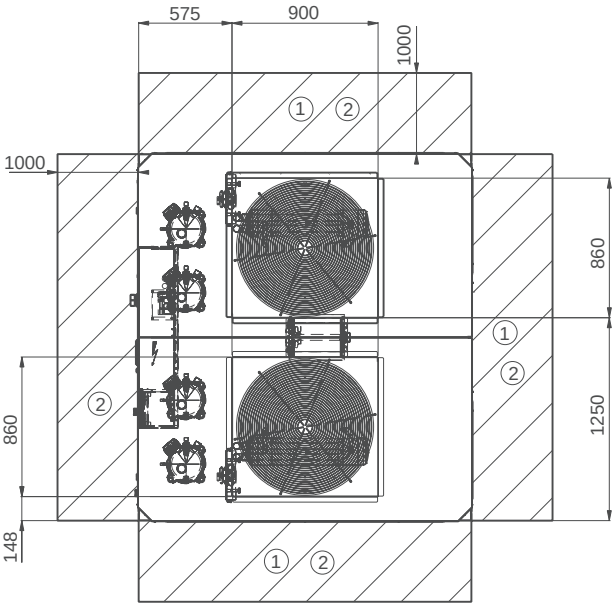

Notes:

A Non-certified drawings.
Refer to the certified dimensional drawings supplied with the unit or available on request, when designing an installation. For the location of fixing points, weight distribution and coordinates of the centre of gravity refer to the certified dimensional drawings.

B Provide a gutter around the unit to collect the condensate water or install the accessory condensate collection pan.

C The unit must be installed level (less than 2 mm per metre deviation in both axes).

D Units are equipped with a sleeve on the air heat exchanger side to allow connection of a suction air frame.

Position of the desuperheater inlets and outlets

30RBSY 039-080

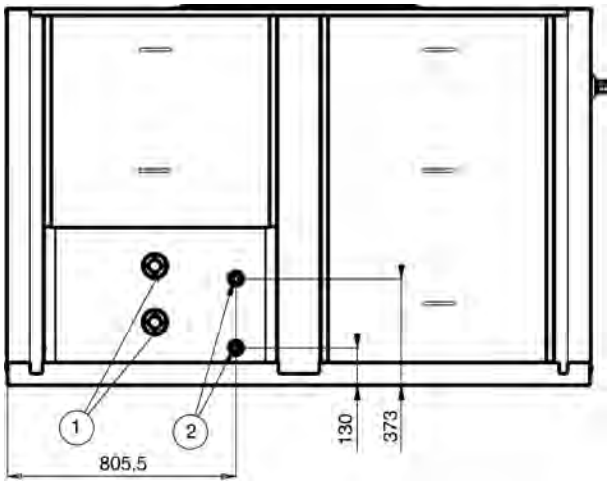

30RBSY 090-120

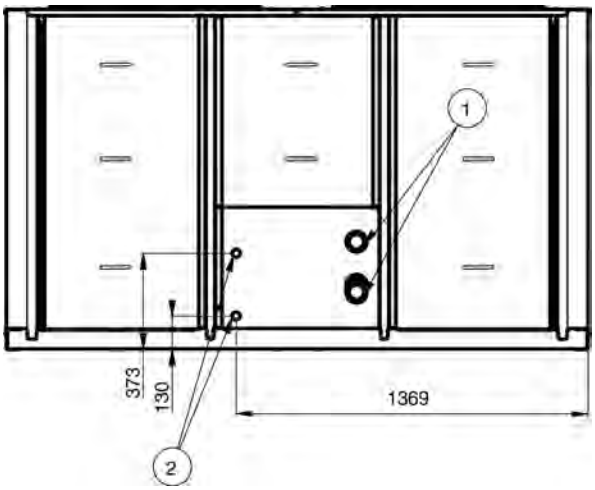

30RBSY 140-160

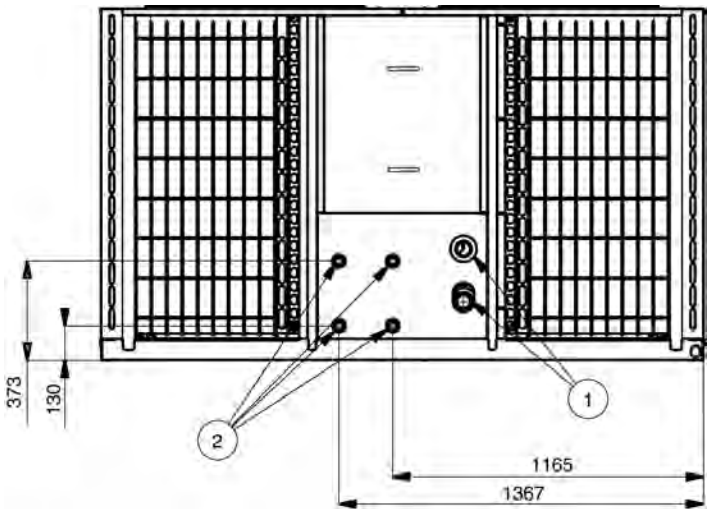

① Unit water inlet and outlet

② Water inlet and outlet, unit with option 49

30RBM/30RBP

Nominal cooling capacity 164-528 kW

greenspeed AQUASNAP

High full and part-load efficiency

Compact and simple to install

Low sound level

Very low refrigerant charge

Superior reliability

The AquaSnap liquid chillers are the best value solution for commercial and industrial applications where installers, consultants and building owners require reduced installed costs, optimal performances and maximum quality.

The new generation AquaSnap features two new versions:

- The AquaSnap (30RBM) version features a compact all-in-one package optimised for full-load applications where reduced investment cost (low Capex) is required. For cold or hot climates, the AquaSnap can be equipped with specific options to operate from -20 °C up to 52 °C.
- The AquaSnap Greenspeed® (30RBP) version features a compact all-in-one package optimised for part-load applications where high ESEER/IPLV are required. The AquaSnap Greenspeed® equipped with variable speed condenser fans and variable speed pump provides premium part load efficiency to reduce utility costs over the lifespan of the chiller. Additionally, the low sounds levels achieved at part load conditions can be very beneficial for sensitive acoustic applications. Besides operating efficiently and quietly, AquaSnap Greenspeed® operates from -20 °C up to 48 °C as standard.

The AquaSnap liquid chillers are designed to meet current and future Ecodesign and F-Gas European regulation requirements in terms of energy efficiency and reduced CO_2 emissions. They use the best technologies available today:

- Reduced refrigerant charge of non-ozone depleting refrigerant R-410A
- Scroll compressors
- Greenspeed® variable-speed driven fans (30RBP models)
- Novation® micro-channel heat exchangers with new aluminum alloy

- Brazed plate heat exchangers with reduced water pressure drops
- Auto-adaptive microprocessor control with Greenspeed® intelligence
- Touch Pilot control with web connectivity possibilities and colour touch screen user display
- Extra energy savings through multiple options: Direct-expansion free cooling system on one or two circuits, hydronic free-cooling system, partial or total heat recovery.

Both AquaSnap versions can be equipped with an integrated hydronic module, limiting the installation to straight-forward operations like connection of the power supply and the chilled water supply and return piping (plug & play), within the dimensions of the standard unit.

Recommended by Carrier, the AquaSnap can be equipped with one or two Greenspeed® variable-speed pumps to save significant pumping energy cost (more than two-thirds), ensure tighter water flow control, and improved overall system reliability.

For operation in the most stringent environments that cumulates high temperature, dusts and sand, the AquaSnap (30RBM) can be equipped with optional IP54 electrical box and cabinet fan to operate up to 52 °C outside air temperature.

Physical data

EUROVENT CERTIFIED PERFORMANCE www.eurovent-certification.com

30RBM		160	180	200	220	260	300	330	360	400	430	470	520
Cooling													
Air conditioning application as per EN14511-3:2013† - standard unit													
Nominal cooling capacity	kW	168	181	198	216	261	300	331	365	397	430	464	523
ESEER	kW/kW	4.00	4.07	4.01	4.00	4.00	4.07	4.08	4.10	4.05	4.07	4.04	4.03
EER	kW/kW	3.04	3.12	2.98	2.97	2.90	2.97	2.92	2.95	2.90	2.94	2.90	2.90
Eurovent class cooling		B	A	B	B	B	B	B	B	B	B	B	B
Air conditioning application†† - standard unit													
Nominal cooling capacity	kW	168	182	199	216	262	301	331	366	398	431	465	524
ESEER	kW/kW	4.12	4.20	4.16	4.17	4.16	4.20	4.19	4.24	4.17	4.19	4.17	4.17
EER	kW/kW	3.07	3.16	3.02	3.01	2.93	3.00	2.94	2.98	2.93	2.97	2.93	2.93
IPLV	kW/kW	4.57	4.57	4.54	4.51	4.50	4.61	4.61	4.69	4.58	4.62	4.55	4.58
Sound levels													
Standard unit													
Sound power level***	dB(A)	91	92	92	92	92	93	93	93	93	94	94	94
Sound pressure level at 10 m****	dB(A)	59	60	60	60	60	60	60	61	61	62	62	62
Standard unit + option 15*													
Sound power level***	dB(A)	89	90	90	90	90	91	91	92	92	93	93	93
Sound pressure level at 10 m****	dB(A)	57	58	58	58	58	59	59	60	60	61	61	61
Standard unit + option 15LS*													
Sound power level***	dB(A)	85	85	85	86	86	86	86	87	87	88	88	88
Sound pressure level at 10 m****	dB(A)	53	53	53	54	54	54	54	55	55	55	55	56
Dimensions - standard unit													
Length	mm	2410					3604				4797		
Width	mm	2253					2253				2253		
Height	mm	2297					2297				2297		
Operating Weight **													
Standard unit	kg	1216	1257	1257	1387	1408	1865	1901	2069	2125	2545	2563	2761
Standard unit + option 15*	kg	1299	1339	1340	1495	1516	1991	2027	2212	2269	2707	2726	2941
Standard unit + option 15 + option 116S*	kg	1438	1479	1479	1634	1670	2151	2231	2416	2472	2950	2967	3221

† Eurovent-certified performances in accordance with standard EN14511-3:2013.
Cooling mode conditions: Evaporator water entering/leaving temperature 12 °C/7 °C, outside air temperature 35 °C. Evaporator fouling factor 0.00 m². k/W

†† Gross performances, not in accordance with EN14511-3:2013. These performances do not take into account the correction for the proportional heating capacity and power input generated by the water pump to overcome the internal pressure drop in the heat exchanger. Evaporator water entering/leaving temperature 12 °C/7 °C, outside air temperature 35 °C. evaporator fouling factor 0.00 m². k/W

* Options: 15 = Low noise level, 15LS = Very low noise level, 116S = High Pressure dual-pump hydronic module

** Weights are guidelines only. Refer to the unit nameplate.

*** In dB ref=10^{-12} W, (A) weighting. Declared dualnumber noise emission values in accordance with ISO 4871 (with an associated uncertainty of +/-3 dB(A)). Measured in accordance with ISO 9614-1 and certified by Eurovent.

**** In dB ref 20 µPa, (A) weighting. Declared dualnumber noise emission values in accordance with ISO 4871 (with an associated uncertainty of +/-3 dB(A)). For information, calculated from the sound power level Lw(A).

Eurovent certified data

Physical data

30RBM		160	180	200	220	260	300	330	360	400	430	470	520
Compressors		Hermetic scroll 48.3 tr/s											
Circuit A		1	1	1	2	2	2	2	3	3	3	3	4
Circuit B		2	2	2	2	2	3	3	3	3	4	4	4
No. of control stages		3	3	3	4	4	5	5	6	6	7	7	8
Refrigerant - Standard unit**		R410A											
Circuit A	kg	8.40	10.90	10.90	12.60	13.10	14.70	15.40	20.30	21.10	23.50	23.50	26.75
	teqCO_2	17.5	22.8	22.8	26.3	27.4	30.7	32.2	42.4	44.1	49.1	49.1	55.9
Circuit B	kg	12.25	12.60	12.60	12.70	13.10	20.20	20.20	20.40	22.20	26.70	26.80	26.95
	teqCO_2	25.6	26.3	26.3	26.5	27.4	42.2	42.2	42.6	46.4	55.7	56.0	56.3
Capacity control		Pro-Dialog+ Control											
Minimum capacity	%	33	33	33	25	25	20	20	17	17	14	14	13
Condensers		All-aluminium micro-channel heat exchanger (MCHE)											
Fans - Standard unit		Axial Flying Bird 4 with rotating shroud											
Quantity		3	4	4	4	4	5	5	6	6	7	7	8
Maximum total air flow	l/s	13542	18056	18056	18056	18056	22569	22569	27083	27083	31597	31597	36111
Maximum rotation speed	tr/s	16	16	16	16	16	16	16	16	16	16	16	16
Evaporator		Twin-circuit plate heat exchanger											
Water content	l	15	15	15	15	19	27	35	33	42	44	47	53
Max. water-side operating pressure without hydronic module	kPa	3200	3200	3200	3200	3200	3200	3200	3200	3200	3200	3200	3200
Hydronic Module (option)		Pump, Victaulic screen filter, safety valve, water valve and air purge, pressure sensors, expansion tank (option)											
Pump		Centrifugal, monocell, 48.3 r/s, low or high pressure (as required), single or dual pump (as required)											
Expansion tank volume	l	50	50	50	50	50	80	80	80	80	80	80	80
Max. water-side operating pressure with hydronic module	kPa	400	400	400	400	400	400	400	400	400	400	400	400
Water connections with or without hydronic module		Victaulic type											
Diameter	inch	3	3	3	3	3	4	4	4	4	4	4	4
Outside tube diameter	mm	88.9	88.9	88.9	88.9	88.9	114.3	114.3	114.3	114.3	114.3	114.3	114.3
Chassis paint colour		Colour code RAL 7035											

† Eurovent-certified performances in accordance with standard EN14511-3:2013.
Cooling mode conditions: Evaporator water entering/leaving temperature 12 °C/7 °C, outside air temperature 35 °C. Evaporator fouling factor 0.00 m^2. k/W

†† Gross performances, not in accordance with EN14511-3:2013. These performances do not take into account the correction for the proportional heating capacity and power input generated by the water pump to overcome the internal pressure drop in the heat exchanger. Evaporator water entering/leaving temperature 12 °C/7 °C, outside air temperature 35 °C. evaporator fouling factor 0.00 m^2. k/W

* Options: 15 = Low noise level, 15LS = Very low noise level, 116S = High Pressure dual-pump hydronic module

** Weights are guidelines only. Refer to the unit nameplate.

*** In dB ref=10^{-12} W, (A) weighting. Declared dualnumber noise emission values in accordance with ISO 4871 (with an associated uncertainty of +/-3 dB(A)). Measured in accordance with ISO 9614-1 and certified by Eurovent.

**** In dB ref 20 µPa, (A) weighting. Declared dualnumber noise emission values in accordance with ISO 4871 (with an associated uncertainty of +/-3 dB(A)). For information, calculated from the sound power level Lw(A).

Eurovent certified data

Physical data

EUROVENT CERTIFIED PERFORMANCE
www.eurovent-certification.com

30RBP		160	180	200	220	260	300	330	360	400	430	470	520
Cooling													
Air conditioning application as per EN14511-3:2013† - standard unit													
Nominal cooling capacity	kW	168	180	197	216	261	300	331	365	397	430	464	523
ESEER	kW/kW	4.18	4.21	4.14	4.18	4.15	4.37	4.28	4.37	4.26	4.36	4.44	4.30
EER	kW/kW	3.04	3.12	2.98	2.97	2.90	2.97	2.92	2.95	2.90	2.94	2.90	2.90
Eurovent class cooling		B	A	B	B	B	B	B	B	B	B	B	B
Air conditioning application††- standard unit													
Nominal cooling capacity	kW	168	181	198	216	262	301	331	366	398	431	465	524
ESEER	kW/kW	4.31	4.36	4.29	4.37	4.32	4.53	4.41	4.53	4.39	4.50	4.60	4.48
EER	kW/kW	3.07	3.16	3.03	3.01	2.93	3.00	2.94	2.98	2.93	2.97	2.93	2.93
IPLV	kW/kW	4.76	4.85	4.73	4.85	4.75	5.00	4.83	5.00	4.81	4.92	5.00	4.84
Sound levels													
Standard unit													
Sound power level***	dB(A)	91	92	92	92	92	93	93	93	93	94	94	94
Sound pressure level at 10 m****	dB(A)	59	60	60	60	60	60	60	61	61	62	62	62
Standard unit + option 15*													
Sound power level***	dB(A)	89	90	90	90	90	91	91	92	92	93	93	93
Sound pressure level at 10 m****	dB(A)	57	58	58	58	58	59	59	60	60	61	61	61
Standard unit + option 15LS*													
Sound power level***	dB(A)	85	85	85	86	86	86	86	87	87	88	88	88
Sound pressure level at 10 m****	dB(A)	53	53	53	54	54	54	54	55	55	55	55	56
Dimensions - standard unit													
Length	mm	2410					3604				4797		
Width	mm	2253					2253				2253		
Height	mm	2297					2297				2297		
Operating Weight **													
Standard unit	kg	1252	1293	1293	1423	1445	1901	1937	2105	2162	2603	2621	2827
Standard unit + option 15*	kg	1334	1376	1376	1531	1553	2027	2063	2249	2306	2765	2783	3007
Standard unit + option 15 + option 116S*	kg	1473	1515	1516	1670	1707	2187	2267	2452	2509	3007	3024	3287
Compressors		Hermetic scroll 48.3 tr/s											
Circuit A		1	1	1	2	2	2	2	3	3	3	3	4
Circuit B		2	2	2	2	2	3	3	3	3	4	4	4
No. of control stages		3	3	3	4	4	5	5	6	6	7	7	8
Refrigerant - Standard unit**		R410A											
Circuit A	kg	8.40	10.90	10.90	12.60	13.10	14.70	15.40	20.30	21.10	23.50	23.50	26.75
	teqCO_2	17.5	22.8	22.8	26.3	27.4	30.7	32.2	42.4	44.1	49.1	49.1	55.9
Circuit B	kg	12.25	12.60	12.60	12.70	13.10	20.20	20.20	20.40	22.20	26.70	26.80	26.95
	teqCO_2	25.6	26.3	26.3	26.5	27.4	42.2	42.2	42.6	46.4	55.7	56.0	56.3
Capacity control		Pro-Dialog+ Control											
Minimum capacity	%	33	33	33	25	25	20	20	17	17	14	14	13
Condensers		All-aluminium micro-channel heat exchanger (MCHE)											

† Eurovent-certified performances in accordance with standard EN14511-3:2013.
Cooling mode conditions: Evaporator water entering/leaving temperature 12 °C/7 °C, outside air temperature 35 °C. Evaporator fouling factor 0.00 m^2. k/W

†† Gross performances, not in accordance with EN14511-3:2013. These performances do not take into account the correction for the proportional heating capacity and power input generated by the water pump to overcome the internal pressure drop in the heat exchanger. Evaporator water entering/leaving temperature 12 °C/7 °C, outside air temperature 35 °C. evaporator fouling factor 0.00 m^2. k/W

* Options: 15 = Low noise level, 15LS = Very low noise level, 116S = High Pressure dual-pump hydronic module

** Weights are guidelines only. Refer to the unit nameplate.

*** In dB ref=10^{-12} W, (A) weighting. Declared dualnumber noise emission values in accordance with ISO 4871 (with an associated uncertainty of +/-3 dB(A)). Measured in accordance with ISO 9614-1 and certified by Eurovent.

**** In dB ref 20 µPa, (A) weighting. Declared dualnumber noise emission values in accordance with ISO 4871 (with an associated uncertainty of +/-3 dB(A)). For information, calculated from the sound power level Lw(A).

Eurovent certified data

Physical data

30RBP		160	180	200	220	260	300	330	360	400	430	470	520
Fans - Standard unit		Axial Flying Bird 4 with rotating shroud											
Quantity		3	4	4	4	4	5	5	6	6	7	7	8
Maximum total air flow	l/s	13542	18056	18056	18056	18056	22569	22569	27083	27083	31597	31597	36111
Maximum rotation speed	tr/s	16	16	16	16	16	16	16	16	16	16	16	16
Evaporator		Twin-circuit plate heat exchanger											
Water content	l	15	15	15	15	19	27	35	33	42	44	47	53
Max. water-side operating pressure without hydronic module	kPa	3200	3200	3200	3200	3200	3200	3200	3200	3200	3200	3200	3200
Hydronic Module (option)		Pump, Victaulic screen filter, safety valve, water valve and air purge, pressure sensors, expansion tank (option)											
Pump		Centrifugal, monocell, 48.3 r/s, low or high pressure (as required), single or dual pump (as required)											
Expansion tank volume	l	50	50	50	50	50	80	80	80	80	80	80	80
Max. water-side operating pressure with hydronic module	kPa	400	400	400	400	400	400	400	400	400	400	400	400
Water connections with or without hydronic module		Victaulic type											
Diameter	inch	3	3	3	3	3	4	4	4	4	4	4	4
Outside tube diameter	mm	88.9	88.9	88.9	88.9	88.9	114.3	114.3	114.3	114.3	114.3	114.3	114.3
Chassis paint colour		Colour code RAL 7035											

† Eurovent-certified performances in accordance with standard EN14511-3:2013.
Cooling mode conditions: Evaporator water entering/leaving temperature 12 °C/7 °C, outside air temperature 35 °C. Evaporator fouling factor 0.00 m^2. k/W

†† Gross performances, not in accordance with EN14511-3:2013. These performances do not take into account the correction for the proportional heating capacity and power input generated by the water pump to overcome the internal pressure drop in the heat exchanger. Evaporator water entering/leaving temperature 12 °C/7 °C, outside air temperature 35 °C. evaporator fouling factor 0.00 m^2. k/W

* Options: 15 = Low noise level, 15LS = Very low noise level, 116S = High Pressure dual-pump hydronic module

** Weights are guidelines only. Refer to the unit nameplate.

*** In dB ref=10^{-12} W, (A) weighting. Declared dualnumber noise emission values in accordance with ISO 4871 (with an associated uncertainty of +/-3 dB(A)). Measured in accordance with ISO 9614-1 and certified by Eurovent.

**** In dB ref 20 µPa, (A) weighting. Declared dualnumber noise emission values in accordance with ISO 4871 (with an associated uncertainty of +/-3 dB(A)). For information, calculated from the sound power level Lw(A).

Eurovent certified data

Electrical data

30RBM		160	180	200	220	260	300	330	360	400	430	470	520
Power circuit													
Nominal power supply	V-ph-Hz	400 - 3 - 50											
Voltage range	V	360 - 440											
Control circuit supply		24 V via internal transformer											
Nominal unit current draw*													
Circuits A + B	A	100	110	124	133	161	180	201	221	242	261	282	322
Maximum unit power input**													
Circuits A + B	kW	80	87	98	107	129	145	161	177	193	209	225	258
Cosine phi, unit at max. capacity**		0.88	0.87	0.87	0.88	0.88	0.88	0.88	0.88	0.88	0.88	0.88	0.88
Maximum unit current draw (Un-10%)***													
Circuits A + B	A	144	158	176	192	230	259	288	317	345	374	403	460
Maximum unit current draw (Un)****													
Circuits A + B	A	133	146	163	177	212	239	266	292	319	345	372	425
Maximum start-up current, standard unit (Un)†													
Circuits A + B	A	307	356	374	352	423	450	476	503	529	556	583	636
Max. start-up current, unit with soft starter (Un)†													
Circuits A + B	A	261	283	300	305	349	376	403	429	456	482	509	562

* Standardised Eurovent conditions: Evaporator entering/leaving water temperature 12 °C/7 °C, outside air temperature 35 °C.
** Power input, compressors and fans, at the unit operating limits (saturated suction temperature 15 °C, saturated condensing temperature 68.3 °C) and nominal voltage of 400 V (data given on the unit nameplate).
*** Maximum unit operating current at maximum unit power input and 360 V.
**** Maximum unit operating current at maximum unit power input and 400 V (values given on the unit nameplate).
† Maximum instantaneous start-up current at operating limit values (maximum operating current of the smallest compressor(s) + fan current + locked rotor current of the largest compressor).

Fan motor electrical data: Units at Eurovent equivalent conditions and motor ambient air temperature of 50 °C at 400 V: 3.8 A, start-up current 20 A, power input 1.75 kW.

30RBP		160	180	200	220	260	300	330	360	400	430	470	520
Power circuit													
Nominal power supply	V-ph-Hz	400 - 3 - 50											
Voltage range	V	360 - 440											
Control circuit supply		24 V via internal transformer											
Nominal unit current draw*													
Circuits A + B	A	97	107	121	130	158	176	197	216	237	255	276	316
Maximum unit power input**													
Circuits A + B	kW	80	87	98	106	128	144	160	176	192	208	224	256
Cosine phi, unit at max. capacity**		0.88	0.88	0.88	0.88	0.88	0.88	0.88	0.88	0.88	0.88	0.88	0.88
Maximum unit current draw (Un-10%)***													
Circuits A + B	A	142	154	173	189	227	255	284	312	340	369	397	454
Maximum unit current draw (Un)****													
Circuits A + B	A	131	142	160	174	209	235	262	287	314	340	366	419
Maximum start-up current, standard unit (Un)†													
Circuits A + B	A	305	353	371	349	420	446	472	498	525	550	577	629
Max. start-up current, unit with soft starter (Un)†													
Circuits A + B	A	259	279	297	302	346	372	399	424	451	477	503	556

* Standardised Eurovent conditions: Evaporator entering/leaving water temperature 12 °C/7 °C, outside air temperature 35 °C.
** Power input, compressors and fans, at the unit operating limits (saturated suction temperature 15 °C, saturated condensing temperature 68.3 °C) and nominal voltage of 400 V (data given on the unit nameplate).
*** Maximum unit operating current at maximum unit power input and 360 V.
**** Maximum unit operating current at maximum unit power input and 400 V (values given on the unit nameplate).
† Maximum instantaneous start-up current at operating limit values (maximum operating current of the smallest compressor(s) + fan current + locked rotor current of the largest compressor).

Fan motor electrical data upstream variable frequency drive: Units at Eurovent equivalent conditions and motor ambient air temperature of 50 °C at 400 V: 3.0 A, start-up current 20 A, power input 1.75 kW.

Options

Options	No.	Description	Advantages	Use 30RBM / 30RBP
Low noise level	15	Aesthetic and sound absorbing compressor enclosure	Noise level reduction by 1 to 2 dB(A)	30RBM/30RBP 160-520
Very low noise level	15LS	Aesthetic and sound absorbing compressor enclosure associated with low-speed fans	Noise level reduction by 6 to 7 dB(A)	30RBM/30RBP 160-520
High ambient temperature	16	Unit equipped with electrical panel cooling fan	Extended unit part-load operation up to 52 °C ambient temperature	30RBM 160-520
IP54 control boxes	20A	Unit with IP54 control box (standard feature) and compressor enclosure	Increased leak tightness of control boxes against intrusion of dusts and water.	30RBM 160-520
Grilles and enclosure panels	23	Metal grilles on the 4 unit sides, plus side enclosure panels at each end of the coil	Improves aesthetics, protection against intrusion to the unit interior, coil and piping protection against impacts.	30RBM/30RBP 160-520
Enclosure panels	23A	Side enclosure panels at each end of the coil	Improves aesthetics, coil and piping protection against impacts.	30RBM/30RBP 160-520
Soft Starter	25	Electronic starter on each compressor	Reduced start-up current	30RBM/30RBP 160-520
Winter operation down to -20 °C	28	Fan speed control of lead fan for each circuit using a variable frequency drive	Stable unit operation for outside air temperature from 0 °C down to -20 °C	30RBM 160-520
Winter operation down to -10 °C	28B	Dual-speed lead fan for each circuit	Stable unit operation for outside air temperature from 0 °C down to -10 °C	30RBM 160-520
Winter operation down to -10 °C low speed	28C	Low speed fans and dual low speed lead fan on each circuit	Reduces the noise level and enables stable unit operation for outside air temperature down to -10 °C	30RBM 160-520
Evaporator frost protection	41	Electric heater on the evaporator	Evaporator module frost protection between 0 °C and -20 °C outside air temperature	30RBM/30RBP 160-520
Evaporator and hydronic module frost protection	42A	Electric heater on the evaporator, hydronic module and optional expansion tank	Evaporator and hydronic module frost protection between 0 °C and -20 °C outside air temperature	30RBM/30RBP 160-520
Partial heat recovery	49	Unit equipped with one desuperheater on each refrigerant circuit	Production of free high-temperature hot-water simultaneously with chilled water production	30RBM/30RBP 160-520
Total heat recovery	50	Unit equipped with additional heat exchanger in parallel with the condenser coils.	Production of free hot-water simultaneously with chilled water production	30RBM/30RBP 160-520
Master/slave operation	58	Unit equipped with supplementary water outlet temperature sensor kit to be field-installed allowing master/slave operation of two units connected in parallel	Optimised operation of two chillers connected in parallel with operating time equalisation	30RBM/30RBP 160-520
Compressor suction and discharge valves	92A	Shut-off valves on the compressor suction and discharge piping	Simple maintenance. Possibility to store the refrigerant charge in the cooler or condenser side during servicing.	30RBM/30RBP 160-520
Compressor discharge valves	93A	Shut-off valves on the compressor discharge piping	Simple maintenance. Possibility to store the refrigerant charge in the condenser side during servicing.	30RBM/30RBP 160-520
HP single-pump hydronic module	116R	Single high-pressure water pump, water filter, electronic water flow control, pressure transducers. See hydronic module option chapter	Easy and fast installation (plug & play)	30RBM/30RBP 160-520
HP dual-pump hydronic module	116S	Dual high-pressure water pump, water filter, electronic water flow control, pressure transducers. See hydronic module option chapter	Easy and fast installation (plug & play)	30RBM/30RBP 160-520
LP single-pump hydronic module	116T	Single low-pressure water pump, water filter, electronic water flow control, pressure transducers. See hydronic module option chapter	Easy and fast installation (plug & play)	30RBM/30RBP 160-520
LP dual-pump hydronic module	116U	Dual low-pressure water pump, water filter, electronic water flow control, pressure transducers. See hydronic module option chapter	Easy and fast installation (plug & play)	30RBM/30RBP 160-520
HP variable-speed single-pump hydronic mod.	116V	Single high-pressure water pump with variable speed drive (VSD), water filter, electronic water flow control, pressure transducers. Multiple possibilities of water flow control. See hydronic module option chapter.	Easy and fast installation (plug & play), significant pumping energy cost savings (more than two-thirds), tighter water flow control, improved system reliability	30RBM/30RBP 160-520
HP variable-speed dual-pump hydronic mod.	116W	Dual high-pressure water pump with variable speed drive (VSD), water filter, electronic flow switch, pressure transducers. Multiple possibilities of water flow control. See hydronic module option chapter.	Easy and fast installation (plug & play), significant pumping energy cost savings (more than two-thirds), tighter water flow control, improved system reliability	30RBM/30RBP 160-520
Dx Free Cooling system on two circuits	118A	Patented Carrier free-cooling system with cooling micro-pump on both refrigerant circuits. Operation without glycol, no extra free-cooling coil. See Dx Free-cooling option chapter.	Energy savings for applications with cooling demand throughout the entire year	30RBM/30RBP 160-520
Dx Free Cooling system on one circuit	118B	Patented Carrier free-cooling system with cooling micro-pump on one refrigerant circuit. Operation without glycol, no extra free-cooling coil. See Dx Free-cooling option chapter.	Energy savings for applications with reduced demand for cooling in the cold season (e.g. office space with computer room, meeting rooms, etc.)	30RBM/30RBP 160-520
CCN to J-Bus gateway	148B	Two-directional communication board complying with JBus protocol	Connects the unit by communication bus to a building management system	30RBM/30RBP 160-520
CCN to Lon gateway	148D	Two-directional communication board complying with Lon Talk protocol	Connects the unit by communication bus to a building management system	30RBM/30RBP 160-520
Bacnet/IP gateway	149	Two-directional high-speed communication using BACnet protocol over Ethernet network (IP)	Easy and high-speed connection by ethernet line to a building management system. Allows access to multiple unit parameters.	30RBM/30RBP 160-520
Energy Management Module	156	Control board with additional inputs/outputs. See Energy Management Module option chapter.	Extended remote control capabilities (oet-point reset, ice storage end, demand limits, boiler on/off command, etc.)	30RBM/30RBP 160-520
Touch Pilot control	158A	Touch Pilot control supplied with a 7 inch colour touch screen user interface	Control with advanced communication technology over Ethernet (IP), user-friendly and intuitive user interface with 7" colour touch screen	30RBM/30RBP 160-520
Power factor correction	231	Capacitors for automatic regulation of power factor (cos phi) value to 0.95	Reduction of the real electrical power, compliance with minimum power factor limit set by utilities	30RBM/30RBP 160-520

Options	No.	Description	Advantages	Use 30RBM / 30RBP
Enviro-Shield anti-corrosion protection	262	Coating by conversion process which modifies the surface of the aluminium producing a coating that is integral to the coil. Complete immersion in a bath to ensure 100% coverage. No heat transfer variation, tested 4000 hours salt spray per ASTM B117.	Improved corrosion resistance, recommended for use in moderately corrosive environments	30RBM/30RBP 160-520
Super Enviro-Shield anti-corrosion protection	263	Extremely durable and flexible epoxy polymer coating applied on micro channel heat exchangers by electro coating process, final UV protective topcoat. Minimal heat transfer variation, tested 6000 hours constant neutral salt spray per ASTM B117, superior impact resistance per ASTM D2794.	Improved corrosion resistance, recommended for use in extremely corrosive environments	30RBM/30RBP 160-520
Welded evaporator water connection kit	266	Piping to be welded with Victaulic connections	Easy water piping connection	30RBM/30RBP 160-520
230 V electrical plug	284	230 V AC power supply source provided with plug socket and transformer (180 VA, 0.8 Amps)	Permits connection of a laptop or an electrical device during unit commissioning or servicing	30RBM/30RBP 160-520
Expansion tank	293	Expansion tank supplied with the hydronic module	Protection of closed water systems from excessive pressure	30RBM/30RBP 160-520

Touch Pilot control

The Touch Pilot features a control with advanced communication technology over Ethernet (IP), user-friendly and intuitive user interface with 5" colour touch screen.

- Energy management
  - Monitoring of the cooling and pumping energy use on Touch Pilot user interface with optional electricity meter
- Integrated advanced communication features
  - Easy and high-speed communication technology over Ethernet (IP) to a building management system
  - Access to multiple unit parameters.
- 5" Touch Pilot user interface

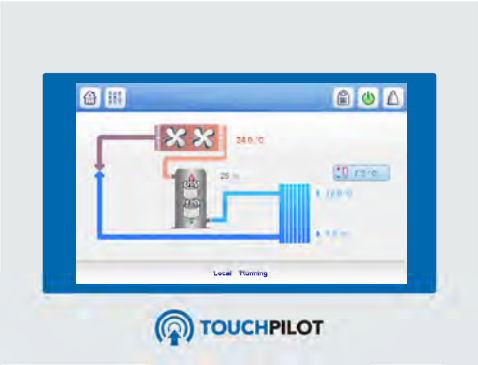

- Intuitive and user-friendly 5 inch touch screen interface
- Concise and clear information is available in local languages
- Complete menu, customised for different users (end user, service personnel or Carrier engineers).

Energy Management Module (option)

The Energy Management Module offers extended remote control possibilities:

- Room temperature: Permits set-point reset based on the building indoor air temperature (with Carrier thermostat)
- Set point reset: Ensures reset of the cooling set-point based on a 4-20 mA or 0-10 V signal
- Demand limit: Permits limitation of the maximum chiller power based on a 4-20 mA signal
- Demand limit 1 and 2: Closing of these contacts limits the maximum chiller power or current to two predefined values.
- User safety: This contact can be used for any customer safety loop; opening the contact generates a specific alarm.
- Ice storage end: When ice storage has finished, this input permits return to the second set-point (unoccupied mode).
- Time schedule override: Closing of this contact cancels the time schedule effects.
- Out of service: This signal indicates that the chiller is completely out of service.
- Chiller capacity: This analogue output (0-10 V) gives an immediate indication of the chiller capacity.
- Alert indication: This volt-free contact indicates the necessity to carry out a maintenance operation or the presence of a minor fault.
- Boiler control: This on/off output controls an independant boiler to provide hot water.

Option 49 Partial Heat recovery

Preliminary performance
30RBM/RBP Cooling only

Condition OAT : 35°C - Water : 12-7°C

30 RBM		160	180	200	220	260	300	330	360	400	430	470	520
THR (kW)	kW	220.7	237.2	261.2	292.7	346.9	399.5	446.1	487.9	535.2	574.8	617.6	698.0
Heat cap. (45-55°C)	**kW**	**51.3**	**55.2**	**66.9**	**74.5**	**102.1**	**103.1**	**122.5**	**124.9**	**144.6**	**145.5**	**168.2**	**195.3**
% reclaim	%	23%	23%	26%	25%	29%	26%	27%	26%	27%	25%	27%	28%
Water flow	/s	1.2	1.3	1.6	1.8	2.4	2.5	3.0	3.0	3.5	3.6	4.0	4.7
WPD	kPa	5	5	8	9	17	9	13	8	11	12	15	20
Heat cap. (50-60°C)	**kW**	**42.4**	**41.5**	**51.2**	**58.3**	**77.6**	**82.8**	**97.1**	**99.1**	**114.7**	**115.5**	**133.5**	**155.0**
% reclaim	%	19%	17%	20%	20%	22%	21%	22%	20%	21%	20%	22%	22%
Water flow	/s	1.0	1.0	1.2	1.4	1.9	2.0	2.3	2.4	2.7	2.9	3.2	3.7
WPD	kPa	3	3	5	6	10	6	8	5	7	8	10	13
Heat cap. (55-65°C)	**kW**	**33.9**	**35.5**	**41.7**	**47.9**	**70.1**	**68.6**	**81.4**	**82.5**	**95.4**	**97.2**	**111.1**	**128.9**
% reclaim	%	15%	15%	16%	16%	20%	17%	18%	17%	18%	17%	18%	18%
Water flow	/s	0.8	0.8	1.0	1.1	1.7	1.6	2.0	2.0	2.3	2.4	2.7	3.1
WPD	kPa	2	2	3	4	8	4	6	4	5	5	7	9

Hydronic module (option 116)

The new generation of Carrier hydronic module saves a lot of installation time. The chiller is factory-equipped with the main components for the hydronic system: Water pump, electronic flow switch, Victaulic screen filter, pressure transducers, water temperature sensors, pressures taps (2), safety valve, drain valve, air vent, water purge, optional hydronic module heater and optional expansion tank.

The pressure transducers allow the control to:

- Display the available pressure at the unit outlet and the static system pressure
- Calculate the instantaneous flow rate, using an algorithm that integrates the unit characteristics
- Integrate the system and water pump protection devices (lack of water, water pressure, water flow rate, etc.).

On units fitted with Greenspeed variable-speed pump, the user display enables to:

- Adjust the required pump speed
- Adjust the required available pressure at the unit outlet and the static system pressure, to real customer needs thus saving energy: no need any more for a water flow control valve used for creating artificial pressure drops that are wasting energy.

Several water pump types are available to suit any application:

- Single or dual low-pressure pump or single or dual high-pressure pump
- Greenspeed variable-speed single or dual high-pressure pump.

If necessary increased frost protection down to -20 °C is possible by adding the heater option to the hydronic module piping (see options 42A).

The hydronic module option is integrated into the chiller without increasing its dimensions and saves the space normally used for the water pump.

Typical hydronic circuit diagram

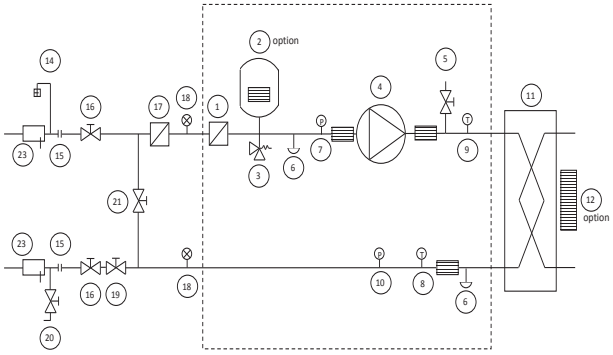

Hydronic module

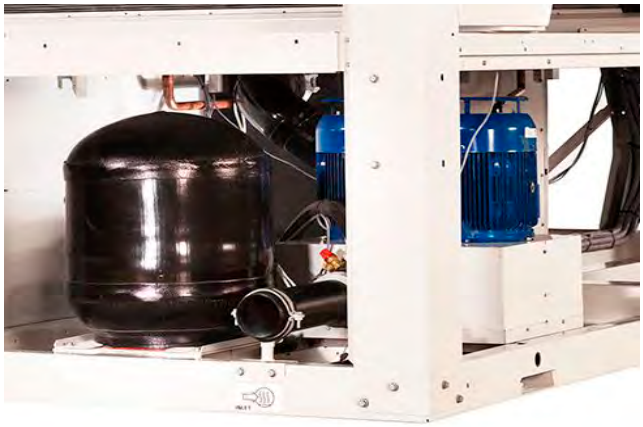

Legend

Components of the unit and hydronic module:

1. Screen filter (mesh opening 1.2 mm)
2. Expansion tank (option)
3. Safety valve
4. Available pressure pump (single pump or dual pump)
5. Air purge
6. Water drain valve
7. Pressure sensor
   Note: Gives pump suction pressure information
8. Temperature probe -
   Note: Gives heat exchanger leaving temperature information
9. Temperature probe -
   Note: Gives heat exchanger entering temperature information
10. Pressure sensor
    Note: Gives unit leaving pressure information
11. Plate heat exchanger
12. Evaporator frost protection heater (option)

Installation components

14. Air purge
15. Flexible connection
16. Shut-off valve
17. Screen filter (obligatory for a unit without hydronic module)
18. Pressure gauge
19. Water flow control valve
    Note: Not necessary for a hydronic module with a variable-speed pump
20. Charge valve
21. Frost protection bypass valve (when shut-off valves [16] are closed during winter)
23. Temperature probe well

--- Hydronic module (unit with hydronic module)

Notes:
The installation must be protected against frost.
The hydraulic module and unit evaporator are protected (option 42A, factory installed) against frost with electric heaters (item 12 + ▭).
The pressure sensors are installed at connections without Schraeder valves. Depressurise and drain the system before any intervention.

Electrical data, units with hydronic modules

The pumps that are factory-installed in these units have motors with efficiency class IE2. The additional electrical data required by regulation 640/2009 is given in the installation, operation and maintenance manual.

This regulation concerns the application of directive 2005/32/EC on the eco-design requirements for electric motors.

Variable Water Flow system (VWF)

Carrier Variable Water Flow

Recommended by Carrier, the AquaSnap can be equipped with one or two variable-speed pumps to save significant pumping energy cost (more than two-thirds), ensure tighter water flow control, and improved overall system reliability.

Carrier Variable Water Flow (VWF) is a hydronic control function package that permits control of the water flow rate.

The Carrier VWF not only ensures control at full load, a specific Carrier algorithm linked to an electronic frequency converter also continuously modulates the flow rate to minimise pump consumption at full load as well as part load.

The Carrier hydronic module includes pressure transducers that permit intelligent measurement of the water flow rate and real-time display on the Pro-Dialog+ or Touch Pilot user interface. All adjustments can be made directly on the interface, speeding up start-up and maintenance.

As Carrier VWF acts directly on the pump, the system no longer requires the control valve at the unit outlet. However, for applications with two-way valves a bypass system must be kept to guarantee the minimum flow rate.

Operating logic

■ Full-load set point

The flow rate control at full load uses the Pro-Dialog+ or Touch Pilot user interface, reducing the pump speed. This first control saves energy that would normally be dissipated in the control valve. For example, if the pressure supplied by the pump is reduced by 20% the power consumption of the pump is reduced by the same ratio, compared to a traditional installation.

■ Operating mode at part load

Pro-Dialog+ includes three part-load operating modes:

- Fixed speed control
- Constant delta P control
- Constant delta T control.

1 - Fixed speed

The control continuously ensures a constant pump speed based on compressor capacity.

When the compressor capacity is equal to zero, the pump speed can be automatically reduced to a second set-point (adjustable down to 60%) to save energy during low occupancy periods.

This solution is suitable for traditional installations with constant water flow and terminal units equipped with three-way valves. This solution reduces pumping energy costs especially when the flow can be reduced during night-time periods.

2 - Constant delta P control

The control continuously acts on the pump speed to ensure a constant delta P.

This solution is suitable for installations with two-way valves. When these close, the water speed will accelerate in the system branches that are still open. For a fixed-speed pump this results in an unnecessary increase of the pressure at the pump outlet.

The constant delta P control mode ensures that each circuit branch always has a uniform supply, without unnecessary energy waste.

In industrial processes such as plastic injection molding, this solution ensures that each terminal unit has the correct pressure supply.

3 - Constant delta T control

The VWF algorithm maintains a constant delta T no matter what the unit load, reducing the flow rate to the minimum. It is suitable for the majority of comfort applications.

Features and advantages

Very economical operation

- High unit full and part load energy efficiency and efficient design of the water side:
  - Eurovent energy efficiency class A or B
  - Standardised Eurovent values in accordance with EN 14511-3:2013 EER up to 3.1 and ESEER up to 4.35 (30RBP version)
  - Multiple scroll compressors equipped with a high-efficiency motor that permit exact matching of the cooling capacity to the load
  - Electronic expansion device permitting operation at a lower condensing pressure and improved utilisation of the evaporator heat exchange surface (superheat control)
  - Condenser with high-efficiency Novation® aluminum micro channel heat exchangers and Greenspeed® variable speed fans (30RBP version)
  - Low pressure drop brazed plate heat exchangers (pressure drops < 45 kPa at Eurovent conditions).
- Specific control functions to reduce unit cooling energy use during occupied and unoccupied periods:
  - Internal time schedules clock: Permits chiller on/off control and operation at a second set point
  - Automatic water set-point offset based on outside air temperature or room air temperature via an option
  - Floating high-pressure management
  - Variable-speed fan control
  - Cooling demand limitation.
- Greenspeed® variable-speed pump to reduce pumping energy use up to 2/3 (option recommended by Carrier):
  - Elimination of the energy losses caused by the water flow control valve by the electronic setting of the nominal water flow
  - Energy savings during stand-by periods or part-load operation by automatic water pump speed reduction. Pump motor energy use varies as the cube of the speed so that only 40% speed reduction can reduce energy consumption by 80%
  - Improved unit part-load performance (SEER increased SEER value with variable water flow following EN14825).

Refer to hydronic option chapter for more information.

- Extra energy savings through multiple options:
  - Glycol free direct-expansion free cooling (Carrier patent) on one or two refrigerant circuits or hydronic free cooling (available in 2015)
  - Partial or total heat reclaim.
- Reduced maintenance costs
  - Fast diagnosis of possible incidents and their history via the control
  - R-410A refrigerant is easier to use than other refrigerant blends.

Low sound level

- Condenser section with fixed speed fans (30RBM models):
  - Optional low-speed fans (700 rpm) and compressor enclosure to reduce full load noise level by 6 to 7dB(A)
  - Condenser coils in V-shape with an open angle, allowing quieter air flow across the coil
  - Low-noise 4th generation Flying Bird fans, made of a composite material (Carrier patent)
  - Rigid fan installation for reduced noise (Carrier patent).
- Condenser section with Greenspeed® variable-speed fans (30RBP models recommended by Carrier for even quieter operation):
  - Optional factory setting of the fan in low speed together with compressors enclosure to reduce full load noise level by 6 to 7 dB(A)
  - Exceptional acoustic signature during part-load operation through smooth fan speed variation.
- Specific control functions or features to reduce noise level during night or unoccupied periods:
  - Night time sound control with cooling capacity and fan speed limitation
  - Low-noise scroll compressors with low vibration level
  - The compressor assembly is installed on an independent chassis and supported by flexible anti-vibration mountings.
  - Dynamic suction and discharge piping support, minimising vibration transmission (Carrier patent)
  - Acoustic compressor enclosure, reducing radiated noise emissions (option).

Fast and easy installation

- Compact design
  - The AquaSnap units are designed to offer compact dimensions for easy installation.
  - With a length of approximately 4.8 m for 520 kW and a width of 2.25 m the units require minimum floor space.

- Integrated hydronic module (option)
  - Low or high-pressure water pump (as required)
  - Single or dual pump (as required) with operating time balancing and automatic changeover to the back-up pump if a fault develops
  - Water filter protecting the water pump against circulating debris
  - Pressure transducers for direct numerical display of the water flow rate and water pressures
  - Thermal insulation and frost protection down to -20 °C, using an electric resistance heater (option)
  - High-capacity membrane expansion tank (option).
- Integrated hydronic module with Greenspeed® variable-speed pump (option recommended by Carrier)
  - Easy and fast electronic setting of the nominal water flow at unit commissioning thus eliminating the water flow control valve adjustment
  - Automatic control of the pump speed based on constant speed, constant pressure difference or constant temperature difference.
- Simplified electrical connections
  - A single power supply point without neutral
  - Main disconnect switch with high trip capacity
  - 24 V control circuit without risk from a transformer included.
- Fast unit commissioning
  - Systematic factory test before shipment
  - Quick-test function for step-by-step verification of the instruments, electrical components and motor.

Reduced installation costs

- Optional Greenspeed® variable-speed pump with hydronic module (option recommended by Carrier)
  - Elimination of the water flow control valve cost
  - Water system design with variable primary flow (VPF) can provide significant installation cost savings compared with traditional constant primary-variable secondary systems; elimination of the secondary distribution pump, etc.
  - Water system design with fan coils fitted with 2-way valves instead of 3-way valves.
- Buffer tank elimination due to the advanced Carrier control algorithm
  - Minimum water loop volume reduced to 2.5 l/kW.

Environmental responsibility

- R-410A Non-ozone depleting refrigerant
- Reduced direct warming potential (10% of total equivalent warming impact):
  - Low R410-A refrigerant charge below 0.14 kg/kW, through the use of Novation® micro-channel heat exchangers
  - Leak-tight refrigerant circuit with minimum brazed refrigerant connections
  - Qualified Carrier service people for refrigerant servicing
  - ISO 14001 manufacturing site.
- Reduced indirect warming potential (90% of total equivalent warming impact):
  - Reduced unit energy use (high full- and part-load efficiency)
  - Pumping energy use can be reduced up to 2/3 using Greenspeed® variable-speed pump.

Superior reliability

- State-of-the-art concept
  - Two independent refrigerant circuits; the second one automatically takes over, if the first one develops a fault, maintaining partial cooling under all circumstances
  - All compressor components are easily accessible on site minimising down-time
  - All-aluminum Novation® micro-channel heat exchanger (MCHE) with higher corrosion resistance than a conventional coil. The all-aluminum construction eliminates the formation of galvanic currents between aluminum and copper that are responsible for the coil corrosion in saline or corrosive atmospheres.
  - V-coil design to protect the coils against hail impact
  - Optional Enviro-shield anti-corrosion coil coating for use in moderately corrosive environments. Coating applied through conversion process which modifies the surface of the aluminum producing a coating that is integral to the coil. Complete immersion in a bath to ensure 100% coverage. No heat transfer variation, tested 4000 hours salt spray per ASTM B117.
  - Optional Super Enviro-shield anti-corrosion coil coating for use in extremely corrosive environments. Extremely durable and flexible epoxy polymer coating applied on micro channel heat exchangers by electro coating process with a final UV protective topcoat. Minimal heat transfer variation, tested 6000 hours constant neutral salt spray per ASTM B117, superior impact resistance per ASTM D2794.
  - Optional IP54 protection level of compressor control boxes and cabinet fan to guarantee safe operation in hot, dusty, sandy environments
  - Electronic flow switch. Auto-setting according to cooler size and fluid type.
- Auto-adaptive control
  - Control algorithm prevents excessive compressor cycling and permits reduction of the water quantity in the water loop (Carrier patent)
  - Automatic compressor unloading in case of abnormally high condensing pressure
  - Automatic fan speed adjustment in case of coil fouling (30RBP models)
  - Smooth fan start to increase unit lifetime (30RBP models).
- Exceptional endurance tests
  - Partnerships with specialised laboratories and use of limit simulation tools (finite element calculation) for the design of critical components
  - Transport simulation test on an endurance circuit based on a military standard.

Remote management (standard)

Units with Touch Pilot control can be easily accessed from the internet, using a PC with an Ethernet connection. This makes remote control quick and easy and offers significant advantages for service operations.

The AquaSnap is equipped with an RS485 serial port that offers multiple remote control, monitoring and diagnostic possibilities. Carrier offers a vast choice of control products, specially designed to control, manage and supervise the operation of an air conditioning system. Please consult your Carrier representative for more information.

The AquaSnap also communicates with other building management systems via optional communication gateways.

A connection terminal allows remote control of the AquaSnap by wired cable:

- Start/stop: Opening of this contact will shut down the unit
- Dual set-point: Closing of this contact activates a second set-point (example: unoccupied mode).
- Demand limit: Closing of this contact limits the maximum chiller capacity to a predefined value.
- Operation indication: This volt-free contact indicates that the chiller is operating (cooling load).
- Alarm indication: This volt-free contact indicates the presence of a major fault that has led to the shut-down of one or several refrigerant circuits.

Novation® Aluminium Micro Channel Heat Exchanger

The Novation® features the latest generation of Carrier Micro Channel Heat Exchanger (MCHE) with new extra resistant aluminum alloy. Already utilised in the automobile and aeronautical industries for many years, the MCHE is entirely made of aluminum. This one-piece concept significantly increases its corrosion resistance by eliminating the galvanic currents that are created when two different metals (copper and aluminum) come into contact in traditional heat exchangers. Unlike traditional heat exchangers the MCHE can be used in moderate marine and urban environments.

From an energy efficiency point-of-view the MCHE is approximately 10% more efficient than a traditional coil and allows a 40% reduction in the amount of refrigerant used in the chiller. The low thickness of the MCHE reduces air pressure losses by 50% and makes it less susceptible to fouling (e.g. by sand) than a traditional coil. Cleaning of the MCHE is very fast using a high-pressure washer.

Operating ranges

Operating range - 30RBM 160-520

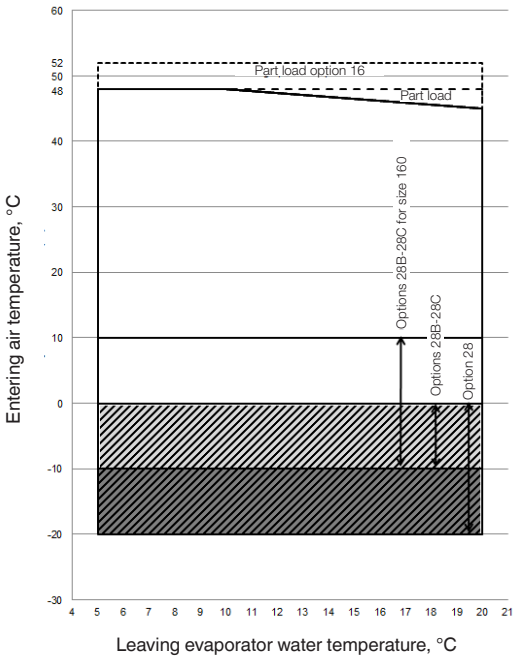

Operating range - 30RBP 160-520

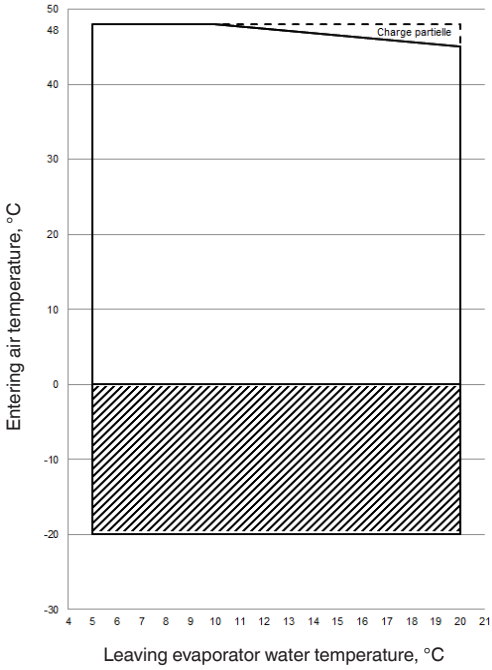

Notes:

Evaporator ΔT = 5 K
Operating ranges are guidelines only. Verify operating range with the Carrier electronic catalog.

Legend:

Standard unit 30RBM or 30RBP operating at full load.
Operating range, 30RBM unit is equipped with options 28, 28B, 28C "Winter operation". Options 28B, 28C (with two-speed lead fan for each circuit) allows operation down to -10 °C outside temperature.
Extension of the operating range, 30RBM unit equipped with option 28. Option 28 (with variable-speed lead fan for each circuit) allows operation below to -20 °C outside temperature.
In addition to the options 28, 28B, or 28C for 30RBM units or for operation at an air temperature below 0 °C for 30RBP units must either be equipped with the evaporator frost protection option (for units without hydronic module option) or the evaporator and hydronic module frost protection option (for units with hydronic module option) or the water loop must be protected by the installer by adding a frost protection solution.

Available static system pressure

Data applicable for:

- Fresh water 20 °C
- Refer to the paragraph "Evaporator water flow rate" for maximum water flow values.
- In case of use of the glycol, the maximum water flow rate is reduced.

Units 30RBM/30RBP high-pressure pumps (fixed speed or variable speed at 50Hz)

Single pumps

Sizes 160-400

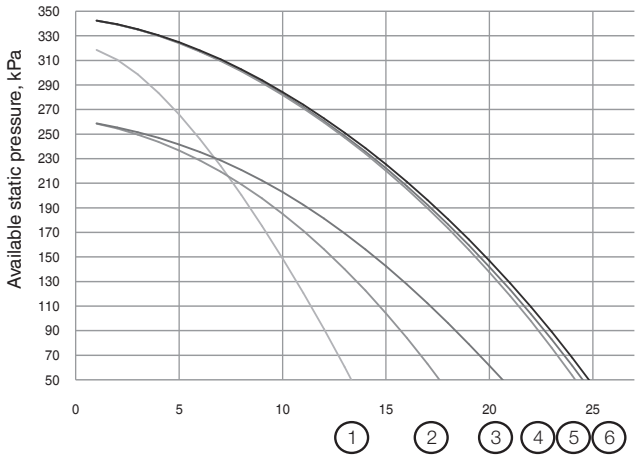

Sizes 430-520

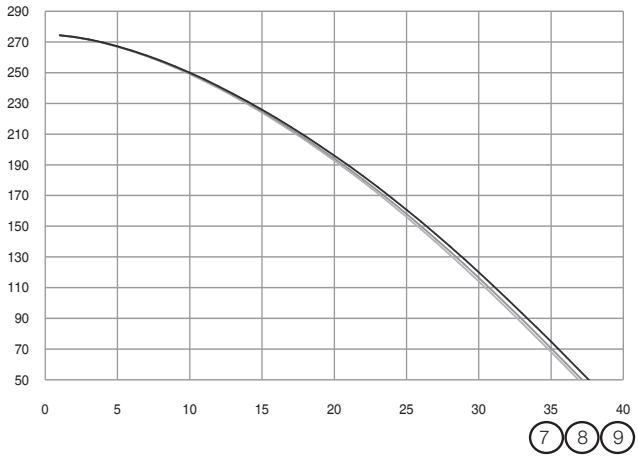

Water flow rate, l/s

1. 30RBM-30RBP 160 to 220
2. 30RBM-30RBP 260
3. 30RBM-30RBP 300
4. 30RBM-30RBP 360
5. 30RBM-30RBP 330
6. 30RBM-30RBP 400
7. 30RBM-30RBP 430
8. 30RBM-30RBP 470
9. 30RBM-30RBP 520

Dual pumps

Sizes 160-400

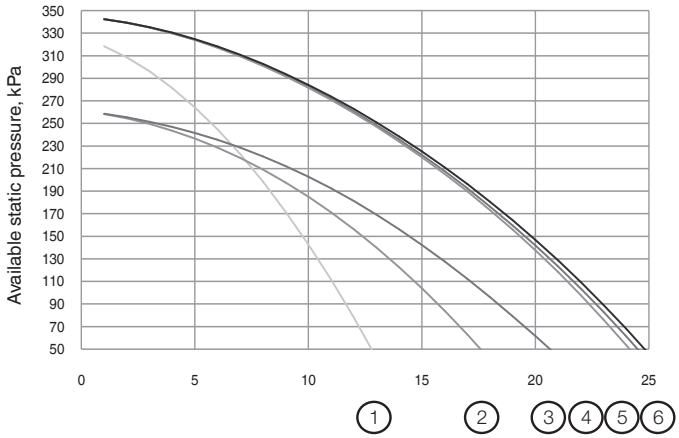

Sizes 430-520

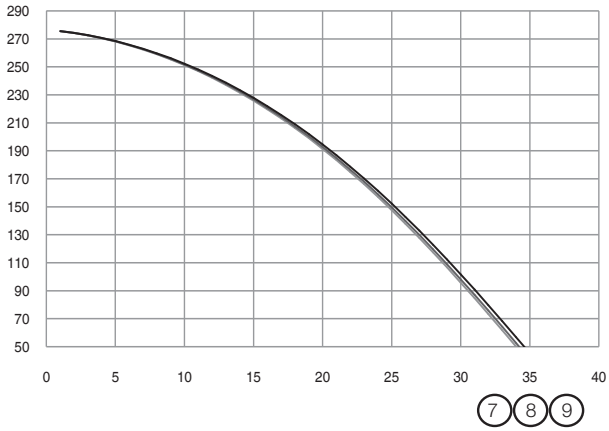

Water flow rate, l/s

1. 30RBM-30RBP 160 to 220
2. 30RBM-30RBP 260
3. 30RBM-30RBP 300
4. 30RBM-30RBP 360
5. 30RBM-30RBP 330
6. 30RBM-30RBP 400
7. 30RBM-30RBP 430
8. 30RBM-30RBP 470
9. 30RBM-30RBP 520

Available static system pressure

Data applicable for:

- Fresh water 20 °C
- Refer to the paragraph "Evaporator water flow rate" for maximum water flow values.
- In case of use of the glycol, the maximum water flow rate is reduced.

Units 30RBM/30RBP low-pressure pumps (fixed speed)
Single pumps

Sizes 160-300

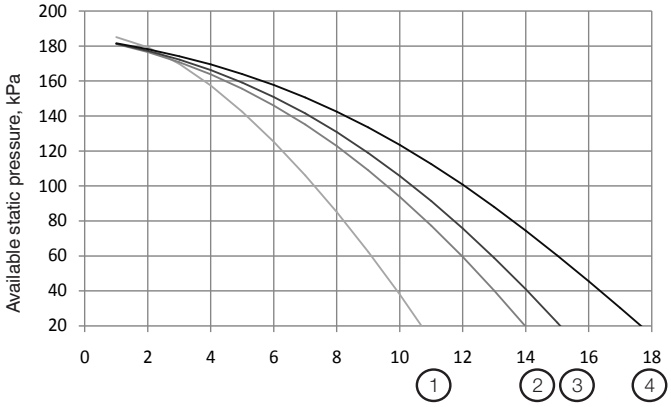

Sizes 330-520

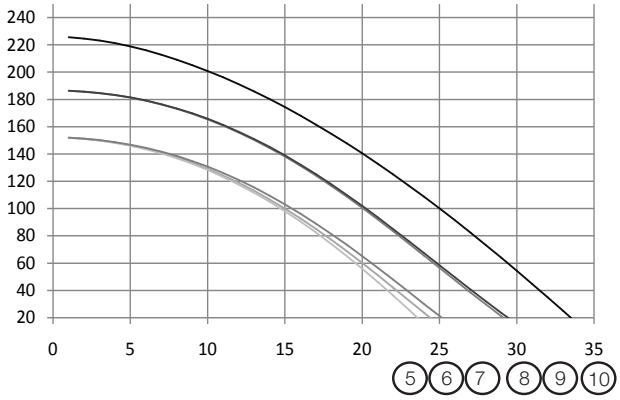

Water flow rate, l/s

1. 30RBM-30RBP 160 to 180
2. 30RBM-30RBP 200 to 220
3. 30RBM-30RBP 260
4. 30RBM-30RBP 300

5. 30RBM-30RBP 330
6. 30RBM-30RBP 360
7. 30RBM-30RBP 400
8. 30RBM-30RBP 430
9. 30RBM-30RBP 470
10. 30RBM-30RBP 520

Dual pumps

Sizes 160-360

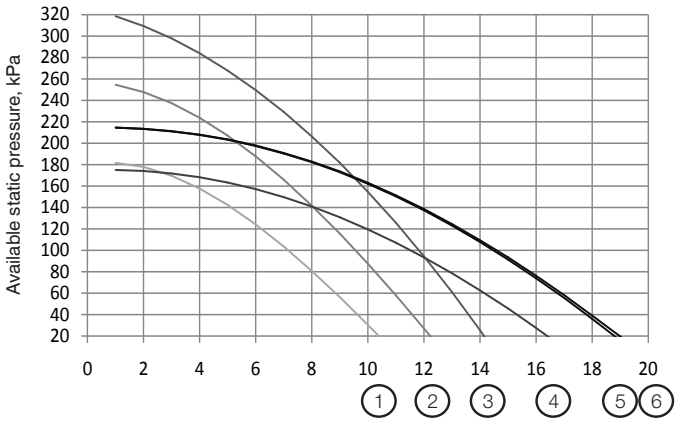

Sizes 400-520

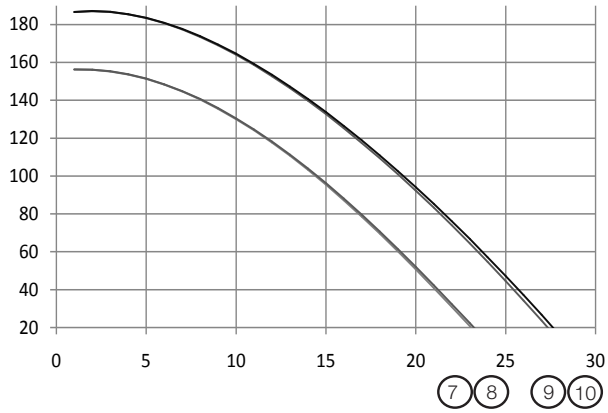

Water flow rate, l/s

1. 30RBM-30RBP 160 to 200
2. 30RBM-30RBP 220
3. 30RBM-30RBP 260
4. 30RBM-30RBP 300
5. 30RBM-30RBP 360
6. 30RBM-30RBP 330

7. 30RBM-30RBP 400
8. 30RBM-30RBP 430
9. 30RBM-30RBP 470
10. 30RBM-30RBP 520

Dimensions/clearances

30RBM/30RBP 160-260 (with and without hydronic module)

Unit without hydronic module

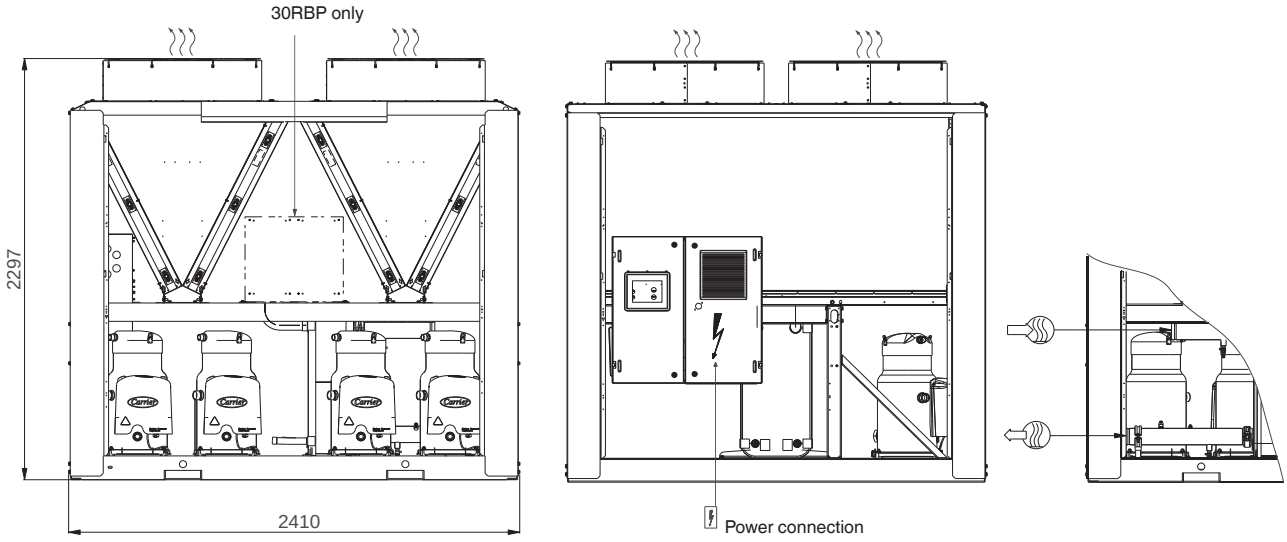

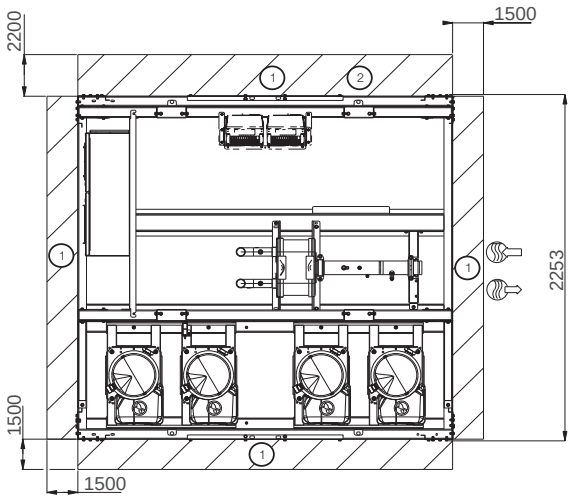

Legend:

All dimensions are in mm.

1 Clearances required for maintenance and air flow

2 Clearances required for removal of coil

Water inlet

Water outlet

Air outlet, do not obstruct

Control box

Note: Drawings are not contractually binding. Before designing an installation, consult the certified dimensional drawings, available on request.

For the positioning of the fixing points, weight distribution points and centre of gravity coordinates please refer to the dimensional drawings.

Unit with hydronic module

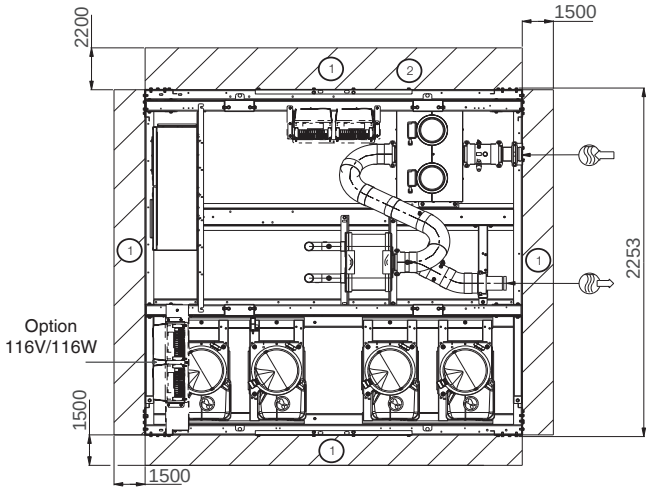

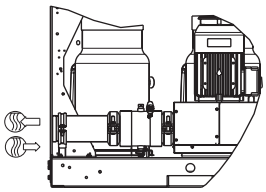

Dimensions/clearances

30RBM/30RBP 300-400 (with and without hydronic module)

Unit without hydronic module

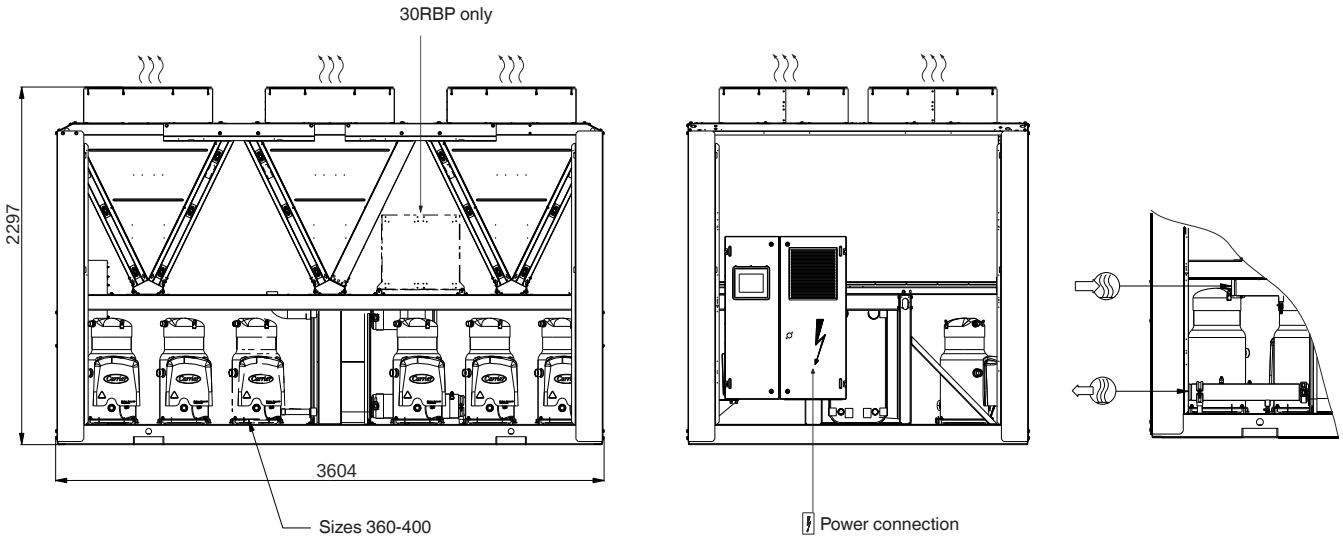

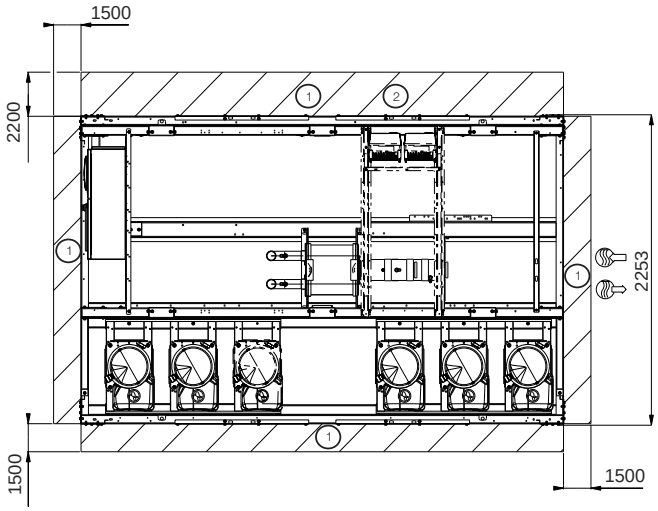

Legend:

All dimensions are in mm.

1 Clearances required for maintenance and air flow

2 Clearances required for removal of coil

Water inlet

Water outlet

Air outlet, do not obstruct

Control box

Note: Drawings are not contractually binding. Before designing an installation, consult the certified dimensional drawings, available on request.

For the positioning of the fixing points, weight distribution points and centre of gravity coordinates please refer to the dimensional drawings.

Unit with hydronic module

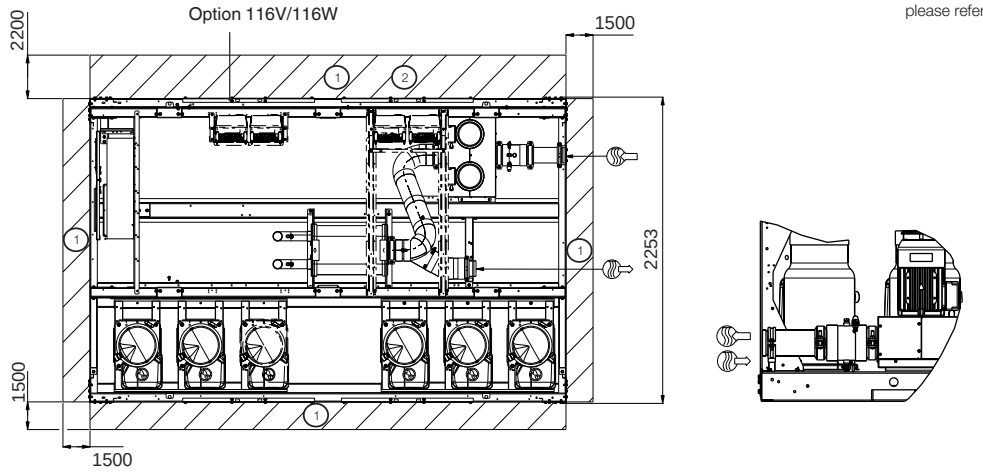

Dimensions/clearances

30RBM/30RBP 430-520 (with and without hydronic module)

Unit without hydronic module

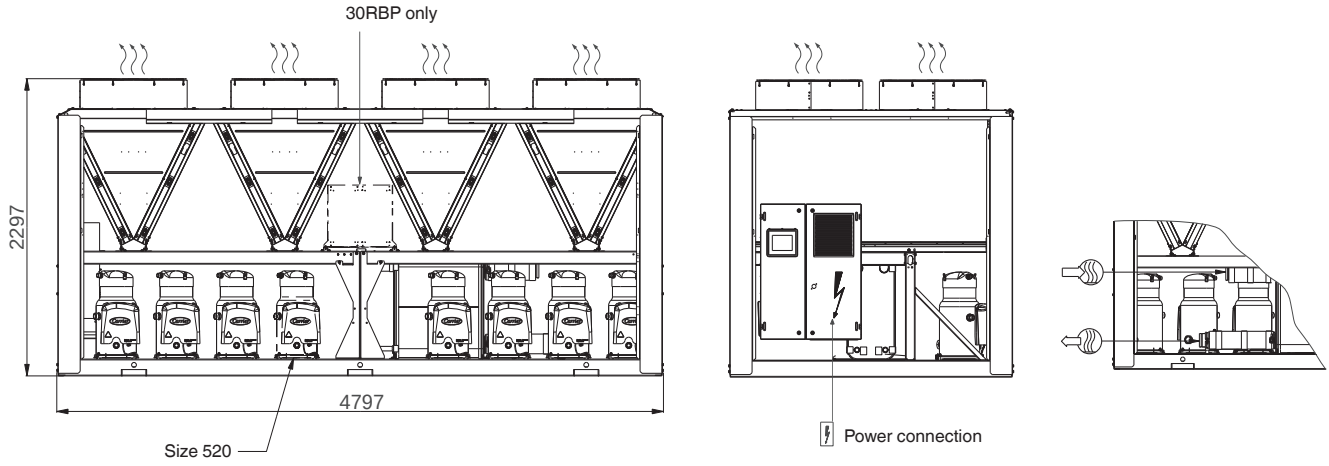

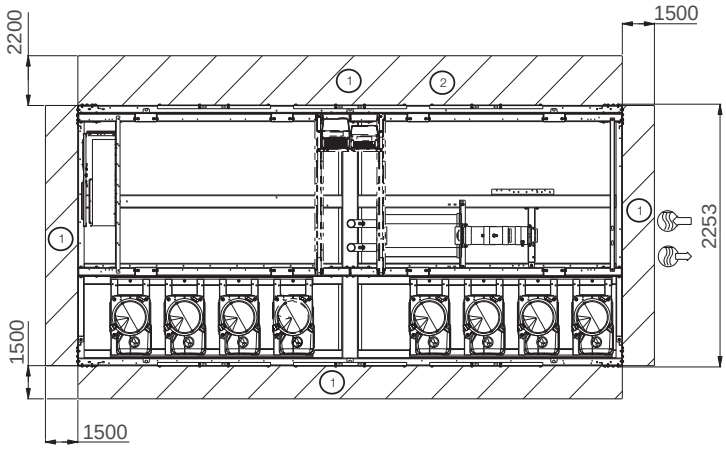

Legend:

All dimensions are in mm.

1 Clearances required for maintenance and air flow

2 Clearances required for removal of coil

Water inlet

Water outlet

Air outlet, do not obstruct

Control box

Note: Drawings are not contractually binding. Before designing an installation, consult the certified dimensional drawings, available on request.

For the positioning of the fixing points, weight distribution points and centre of gravity coordinates please refer to the dimensional drawings.

Unit with hydronic module

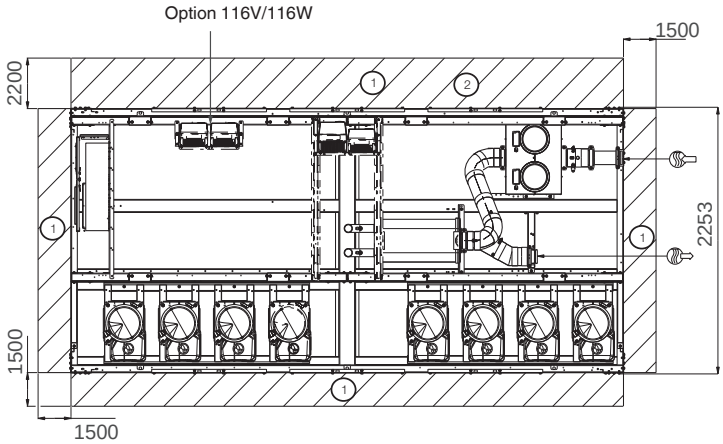

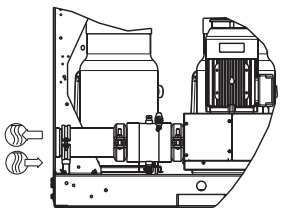

30RB

Nominal cooling capacity 606-774 kW

AQUASNAP®

Compact design

Alluminium micro-channel heat exchanger technology

Partial heat reclaim

The AquaSnap liquid chiller range features the latest technological innovations:

- Non-ozone depleting refrigerant R-410A
- Scroll compressors
- Low-noise fans made of a composite material
- Auto-adaptive microprocessor control
- Aluminium micro-channel heat exchangers (MCHE)

The AquaSnap can be equipped with an integrated hydronic module, limiting the installation to straight-forward operations like connection of the power supply and the chilled water supply and return piping.

Physical data

30RB units				602	672	732	802
Cooling							
Full load performances*	C1	Nominal capacity	kW	606.9	657.3	711.8	774.4
	C1	EER	kW/kW	2.72	2.68	2.59	2.58
	C1	Eurovent Energy Class		C	D	D	D
Seasonal Efficiency*		ESEER	kW/kW	3.97	3.88	3.75	3.71
Sound Power Level Standard Unit			dB(A)	95	95	96	96
Sound Power Level Standard Unit + Option 15			dB(A)	93	93	94	94
Unit with Option 15LS							
Full load performances*	C1	Nominal capacity	kW	561.2	631.3	670.2	721.4
	C1	EER	kW/kW	2.43	2.45	2.44	2.42
	C1	Eurovent Energy Class		E	E	E	E
Seasonal Efficiency*		ESEER	kW/kW	4.06	4.06	4.08	4.00
Sound Power Level Standard Unit + Options 15LS			dB(A)	89	89	89	90
Operating weight - standard unit†			kg	4627	4873	5362	5609
Compressors				Hermetic scroll, 48.3 r/s			
Refrigerant				R-410A			
Capacity control				Pro-Dialog Plus			
Condensers				All aluminium micro-channel heat exchanger (MCHE)			
Fans				Axial Flying Bird 4 with rotating shroud			
Quantity				9	10	11	12
Total air flow (high speed)			l/s	40623	45139	49653	54167
Evaporator				Direct expansion, shell-and-tube			
Dimensions							
Length			mm	5992		7186	
Depth			mm	2253		2253	
Height			mm	2297		2297	

C1 Cooling mode conditions: Water heat exchanger, entering/leaving temperature 12°C/7°C, fouling factor 0 m^2 K/W. Outside air temperature 35°C
* In accordance with standard EN14511-3:2013
† Weight shown is a guideline only.

Eurovent certified data

Option 15 = compressor enclosure
Option 15LS = low sound option

For 30RB 162-262 units with option 280 (shell-and-tube heat exchanger) please refer to the specific product literature

Electrical data

30RB (without hydronic module)		602	672	732	802
Power circuit					
Nominal power supply	V-ph-Hz	400-3-50 ± 10%			
Control circuit supply		24 V, via internal transformer			
Max. power input* - circuits A + B/C	kW	191/96	191/127	255/96	255/127
Nom. current draw - circuits A + B/C**	A	251/125	251/167	334/125	334/167
Max. start-up current* - circuits A + B/C**	A	535/371	535/426	645/371	645/426

* Power input, compressors and fans, at the unit operating limits (saturated suction temperature 10°C, saturated condensing temperature 65°C) and nominal voltage of 400 V (data given on the unit nameplate).
** Nom. unit current draw at standardised Eurovent conditions: evaporator entering/leaving water temperature 12°C/7°C, outside air temperature 35°C.
*** Maximum instantaneous start-up current at operating limit values (maximum operating current of the smallest compressor(s) + fan current + locked rotor current of the largest compressor).

Note: Units 30RB 602-802 have two electrical connection points.

Options

Options	No.	Description	Advantages	Use 30RB
Unit for indoor installation with discharge ducts	12	Fans with available pressure	Ducted condenser air discharge, optimised condensing temperature control, based on the operating conditions and system characteristics	602-802
Low noise level	15	Sound absorbing compressor enclosure	Noise emission reduction	602-802
Very low noise level	15LS	Sound absorbing compressor enclosure and low-speed fans	Noise emission reduction	602-802
Grilles	23	Metallic grilles on all four unit faces (this option includes the supply of enclosure panels)	Improved aesthetics	602-802
Enclosure panels	23A	Side panels on each end of the coils	Improved aesthetics	602-802
Winter operation down to -20°C	28	Fan speed control via frequency converter	Stable unit operation when the air temperature is between 0°C and -20°C	602-802
Winter operation down to -10°C	28B	Twin-speed lead fan for each circuit	Stable unit operation when the air temperature is between 0°C and -10°C	602-802
Winter operation down to -10°C and very low noise level (options 28B + 15LS)	28C	Sound absorbing compressor enclosure and low-speed fans + twin-speed lead fan for each circuit	Noise emission reduction and stable unit operation when the air temperature is between 0°C and -10°C	602-802
Evaporator and water piping frost protection	41	Electric heater on the evaporator and the water inlet/ outlet piping	Evaporator frost protection for air temperatures between 0°C and -20°C	602-802
Partial heat reclaim	49	Partial heat reclaim by desuperheating of the compressor discharge gas	Free high-temperature hot-water production simultaneously with chilled water production	602-802
Master/slave operation	58	Unit equipped with an additional field-installed leaving water temperature sensor, allowing master/slave operation of two chillers connected in parallel	Optimised operation of two chillers connected in parallel with operating time equalisation	602-802
Main disconnect switch without fuse (standard for sizes 162-262)	70	Factory-installed main electric disconnect switch in the control box	Ease-of-installation and compliance with local electrical regulations	602-802
Main disconnect switch with fuse	70D	Factory-installed main electric disconnect switch with fuse in the control box	Same advantage as main disconnect switch and reinforced anti-short circuit protection	602-802
Evaporator with aluminium jacket	88	Evaporator thermal insulation protection by aluminium sheets	Improved resistance to climatic aggression	602-802
Suction valve	92	Shut-off valve on the compressor suction piping (discharge valve as standard)	Simplified maintenance	602-802
JBus gateway	148B	Two-directional communications board, complies with JBus protocol	Easy connection by communication bus to a building management system	602-802
Bacnet gateway	148C	Two-directional communications board, complies with Bacnet protocol	Easy connection by communication bus to a building management system	602-802
LonTalk gateway	148D	Two-directional communications board, complies with LonTalk protocol	Easy connection by communication bus to a building management system	602-802
Energy Management Module EMM	156	See controls manual	Easy wired connection to a building management system	602-802
Safety valve with three-way valve fitted	194	Three-way valve upstream of the safety valves (not compatible with BPHE version)	Safety valve inspection and replacement facilitated without refrigerant loss	602-802
Conformance with Australian regulations	200	Heat exchanger approved to Australian code	-	602-802
Unit storage above 48°C	241	Refrigerant charge stored in the condenser. Option not compatible with MCHE coils; Cu/Al coils are required to store the charge.	Unit transport by container only possible with this option	602-802
Anti-corrosion protection Enviro-Shield for microchannel MCHE coils	262	Microchannel MCHE protection by the Carrier factory for applications in standard and moderate corrosive environments.	Better corrosion resistance, recommended for marine or moderately corrosive industrial environments	602-802
Anti-corrosion protection Super Enviro-Shield for microchannel MCHE coils	263	Microchannel MCHE protection by the Carrier factory for applications in corrosive and aggressive environments	The Super Enviro-Shield option was developed to increase the microchannel MCHE coil application range to extremely corrosive environmental conditions.	602-802
Connection sleeve	266	Piping to be welded with Victaulic connection	Ease-of-installation	602-802
Shell-and- tube evaporator	280	Different heat exchanger type	Ensures compatibility with other options than those available with the standard unit (see Electronic Catalogue)	602-802
Power cable connection side extension	283	Side extension on the power control to allow a reduced cable bend radius	Use of thicker power cables	602-802
230 V electrical plug	284	230 V power source with transformer (180 VA, 0.8 Amps)	Permit connection of a laptop or an electrical device during unit commissioning or servicing	602-802

Remote management (EMM option)

- Room temperature: Permits set point reset based on the building indoor air temperature (with Carrier thermostat)
- Set point reset: Ensures reset of the cooling set point based on a 4-20 mA or 0-5 V signal
- Demand limit: Permits limitation of the maximum chiller demand based on a 4-20 mA or 0-5 V signal
- Demand limit 1 and 2: Closing of these contacts limits the maximum chiller capacity to three predefined values
- User safety: This contact can be used for any customer safety loop, closing of the contact generates a specific alarm
- Ice storage end: When ice storage has finished, this input permits return to the second set point (unoccupied mode)
- Time schedule override: Closing of this contact cancels the time schedule effects
- Out of service: This signal indicates that the chiller is completely out of service
- Chiller capacity: This analogue output (0-10 V) gives an immediate indication of the chiller capacity
- Compressor operation: This contact signals that one or several compressors are in operation

Units with fans with available pressure for indoor installation (option 12)

This option applies to 30RB units installed inside the building in a plant room. For this type of installation the hot air leaving the air-cooled condensers is discharged by the fans to the outside of the building, using a duct system.

30RB units equipped with fans with available pressure are designed to operate with air discharge ducts with maximum pressure drops of 200 Pa.

To compensate for these pressure drops 30RB units with option 12 are equipped with variable-speed fans with a maximum speed of 19 r/s, instead of 15.8 r/s and fixed-speed fans as for the standard units.

All fans in the same refrigerant circuit are controlled by a single-speed variator and therefore all run at the same speed.

The full-load or part-load speed is controlled by a patented algorithm that permanently optimises the condensing temperature to ensure the best unit energy efficiency (EER) whatever the operating conditions and pressure drops of the system ductwork.

Each refrigerant circuit (A, B and C) must have a separate ducting system to prevent any air recycling between the condensers of the different refrigerant circuits.

In 30RB units with option 12 each fan is equipped with a factory-installed connection interface, allowing the connection to the ducting system for the specific circuit (A, B and C) for each fan. Please refer to the unit dimensional drawings for the exact dimensions of the connection interface.

The unit cooling capacity and energy efficiency ratio (EER) vary depending on the duct pressure drops:

- Between 0 and 100 Pa the unit cooling capacity is only slightly affected
- Between 100 and 200 Pa the unit cooling capacity falls considerably depending on the operating conditions (outdoor air temperature and water conditions).

Please refer to the curves below to evaluate the impact of the estimated duct system pressure drop for the installation and the impact of different full load operating conditions on the 30RB unit cooling capacity and EER.

Cooling capacity variations for operating conditions that differ from Eurovent conditions

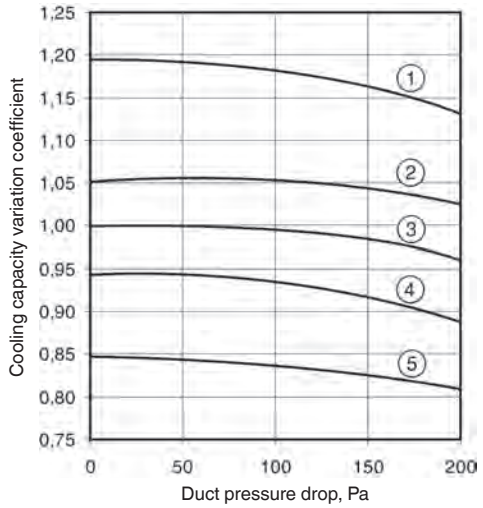

EER variations for operating conditions that differ from Eurovent conditions

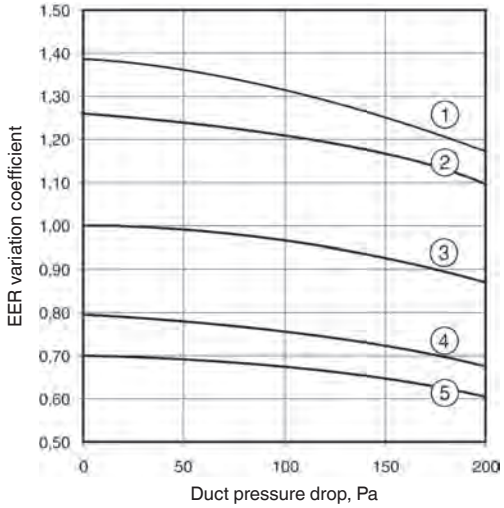

Operating conditions

Curve No.	Outside temperature, °C	Entering water temperature, °C	Leaving water temperature, °C	Load %
1	25	15	10	100
2	25	10	5	100
3	35	12	7	100
Eurovent				
4	45	15	10	100
5	45	10	5	100

Nominal and maximum air flows per circuit

30RB	Nominal/maximum air flow, l/s		
	Circuit A	Circuit B	Circuit C
602	13540/16670	13540/16670	13540/16670
672	13540/16670	13540/16670	18060/22220
732	18060/22220	18060/22220	13540/16670
802	18060/22220	18060/22220	18060/22220

Sound power level at the discharge duct outlet for all circuits

30RB		602	672	732	802
Sound power level 10^{-12} W	dB(A)	96.5	97	97.5	98

Partial heat reclaim using desuperheaters (option 49)

This option permits the production of free hot water using heat reclaim by desuperheating the compressor discharge gases. The option is available for the whole 30RB range.

A plate heat exchanger is installed in series with the air condenser coils on the compressor discharge line of each circuit.

Physical data, 30RB units with partial heat reclaim

30RB - partial heat reclaim mode		602	672	732	802
Cooling capacity*	kW	609	660	714	778
Heating capacity*	kW	197	206	243	241
Unit power input*	kW	222	243	272	297
Energy efficiency ratio*	kW/kW	3	3	3	2.62
Operating weight**					
Standard unit***	kg	5285	5484	6145	6315
Unit with options****	kg	5645	5833	6555	6745
Unit with options†	kg	-	-	-	-
Desuperheater in circuits A/B/C		Plate heat exchanger			
Water volume circuit A	l	5.5	5.5	7.5	7.5
Water volume circuit B	l	5.5	5.5	7.5	7.5
Water volume circuit C	l	5.5	5.7	5.5	7.5
Max. water-side operating pressure	kPa	1000	1000	1000	1000
Water connections		Cylindrical male gas thread			
Connection	in	2	2	2	2
Outside diameter	mm	60.3	60.3	60.3	60.3

* Nominal conditions: Evaporator entering and leaving water temperature = 12°C/7°C, desuperheater entering and leaving water temperature = 50°C/60°C, outside air temperature = 35°C.
Gross performances, not in accordance with EN14511-3:2011. These performances do not take into account the correction for the proportional heating capacity and power input generated by the
water pump to overcome the internal pressure drop in the heat exchanger.
** Weights shown are a guideline only
*** Standard unit (with MCHE coils) and desuperheater option + option 280 (shell-and-tube heat exchanger)
**** Unit with option 15 (desuperheater)
† Unit with option 15 and desuperheater and hydronic module with high-pressure dual pump

Operating limits

Desuperheater		Minimum	Maximum
Entering water temperature at start-up	°C	25*	75
Leaving water temperature during operation	°C	30	80
Air condenser		**Minimum**	**Maximum**
Outside operating temperature	°C	0**	46

* The entering water temperature at start-up must not be lower than 25°C. For installations with a lower temperature a three-way valve is necessary.
** The minimum outside temperature is 0°C. With the winter operation option it is -20°C.

Features and advantages

Quiet operation

- Compressors
  - Low-noise scroll compressors with low vibration level
  - The compressor assembly is installed on an independent chassis and supported by flexible anti-vibration mountings
  - Dynamic suction and discharge piping support, minimising vibration transmission (Carrier patent)
  - Acoustic compressor enclosure, reducing radiated noise emissions (option)
- Condenser section
  - Condenser coils in V-shape with an open angle, allowing quieter air flow across the coil
  - Low-noise 4th generation Flying Bird fans, made of a composite material (Carrier patent) are now even quieter and do not generate intrusive low-frequency noise
  - Rigid fan installation for reduced noise (Carrier patent)

Easy and fast installation

- Simplified electrical connections
  - Main disconnect switch with high trip capacity (see table of options)
  - 24 V control circuit without risk from a transformer included
- Fast commissioning
  - Systematic factory operation test before shipment
  - Quick-test function for step-by-step verification of the instruments, electrical components and motors

Economical operation

- Increased energy efficiency at part load
  - Eurovent energy efficiency class (in accordance with EN14511-3:2011) B to D
  - The refrigerant circuit includes several compressors connected in parallel. At part load, around 99% of the operating time, only the compressors that are absolutely necessary operate. At these conditions the compressors operating are even more energy efficient, as they use the total condenser and evaporator capacity.
  - The electronic expansion device (EXV) allows operation at a lower condensing pressure (EER optimisation).
  - Dynamic superheat management for better utilisation of the evaporator heat exchange surface
  - All-aluminium micro-channel condenser (MCHE), more efficient than a copper/aluminium coil
- Reduced maintenance costs
  - Maintenance-free scroll compressors
  - Fast diagnosis of possible incidents and their history via the Pro-Dialog Plus control
  - R-410A refrigerant is easier to use than other refrigerant blends

Environmentally balanced

- Non-ozone depleting R-410A refrigerant
  - Chlorine-free refrigerant of the HFC group with zero ozone depletion potential
  - Very efficient - gives an increased energy efficiency ratio (EER)
  - 40% reduction in the refrigerant charge through use of the micro-channel heat exchangers (MCHE)
- Leak-tight refrigerant circuit
  - Brazed refrigerant connections for increased leak-tightness
  - Reduction of leaks as no capillary tubes and flare connections are used
  - Verification of pressure transducers and temperature sensors without transferring refrigerant charge

Superior reliability

- State-of-the-art concept
  - Cooperation with specialist laboratories and use of limit simulation tools (finite element calculations) for the design of the critical components, e.g. motor supports, suction/discharge piping
  - Compressor control box installed on the cold side of the compressor (Carrier patent)
  - All-aluminium micro-channel heat exchanger (MCHE) offers 3.5 times higher corrosion resistance than a conventional coil. The all-aluminium construction eliminates the formation of galvanic currents between aluminium and copper that are responsible for the coil corrosion in saline or corrosive atmospheres.
- Auto-adaptive control
  - Control algorithm prevents excessive compressor cycling and permits reduction of the water quantity in the hydronic circuit (Carrier patent).
  - Automatic compressor unloading in case of abnormally high condensing pressure. If an anomaly occurs (e.g. fouled condenser coil, fan failure) AquaSnap continues to operate, but at reduced capacity.
- Exceptional endurance tests
  - Corrosion resistance tests in salt mist in the laboratory
  - Accelerated ageing test on components that are submitted to continuous operation: compressor piping, fan supports
  - Transport simulation test in the laboratory on a vibrating table. The test is based on a military standard and equivalent to 4000 km by truck.

Remote management (standard)

A simple two-wire communication bus between the RS485 port of the AquaSnap and the Carrier Comfort Network offers multiple remote control, monitoring and diagnostic possibilities. Carrier offers a vast choice of control products, specially designed to control, manage and supervise the operation of an air conditioning system. Please consult your Carrier representative for more information on these products.

- Start/stop: Opening of this contact will shut down the unit
- Dual set point: Closing of this contact activates a second set point (example: unoccupied mode)
- Demand limit: Closing of this contact limits the maximum chiller capacity to a predefined value
- User safety: This contact is connected in series with the water flow switch and can be used for any customer safety loop
- Heat reclaim (option): Closing of this contact allows heat reclaim mode operation
- Water pump 1 and 2 control*: These outputs control the contactors of one or two evaporator water pumps
- Water pump on reversal*: These contacts are used to detect a water pump operation fault and automatically change over to the other pump
- Operation indication: This volt-free contact indicates that the chiller is operating (cooling load) or that it is ready to operate (no cooling load)
- Alert indication: This volt-free contact indicates the presence of a minor fault
- Alarm indication: This volt-free contact indicates the presence of a major fault that has led to the shut-down of one or two refrigerant circuits

*Contacts already supplied with the hydronic module option

All aluminium micro-channel heat exchanger (MCHE)

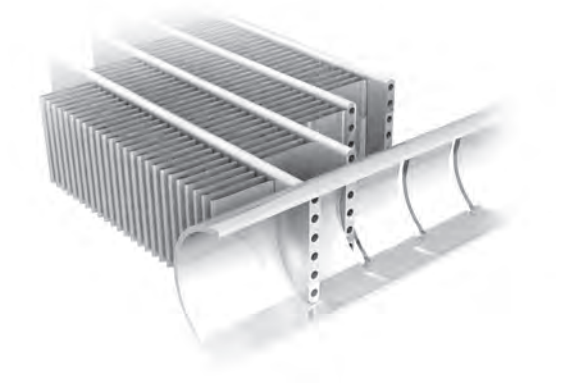

Already utilised in the automobile and aeronautical industries for many years, the MCHE heat exchanger is entirely made of aluminium. This one-piece concept significantly increases its corrosion resistance by eliminating the galvanic currents that are created when two different metals (copper and aluminium) come into contact in traditional heat exchangers. Unlike traditional heat exchangers the MCHE heat exchanger can be used in moderate marine and urban environments.

From an energy efficiency point-of-view the MCHE heat exchanger is approximately 10% more efficient than a traditional coil and allows a 40% reduction in the amount of refrigerant used in the chiller. The low thickness of the MCHE reduces air pressure losses by 50% and makes it less susceptible to fouling (e.g. by sand) than a traditional coil. Cleaning of the MCHE heat exchanger is very fast using a high-pressure washer.

Controls

Pro-Dialog Plus control

Pro-Dialog Plus combines intelligence with operating simplicity. The control constantly monitors all machine parameters and precisely manages the operation of compressors, expansion devices, fans and of the evaporator water pump for optimum energy efficiency.

- Energy management
  - Internal time schedule clock: permits chiller on/off control and operation at a second set point
  - Set point reset based on the outside air temperature or the return water temperature
  - Master/slave control of two chillers operating in parallel with operating time equalisation and automatic change-over in case of a unit fault.
  - Start/stop control based on the air temperature
- Ease-of-use
  - User interface with synoptic diagram for intuitive display of the principal operating parameters: number of compressors operating, suction/discharge pressure, compressor operating hours, set point, air temperature, entering/leaving water temperature
  - Ten menus for direct access to all machine commands, including fault history, allowing fast and complete chiller diagnostics

Pro-Dialog Plus operator interface

Operating limits

Evaporator water flow rate

30RB 602-802 units		
30RB	**Minimum flow rate, l/s**	**Maximum flow rate, l/s***
602	7.9	50.6
672	8.7	50.6
732	9.6	50.6
802	10.3	50.6

* The maximum flow rate corresponds to a pressure loss of 100 kPa (heat exchanger without hydronic module).

Unit operating limits

30RB 602-802 units			
Evaporator		**Minimum**	**Maximum**
Entering water temperature at start-up	°C	6.8*	40
Leaving water temperature during operation	°C	3.3	15**
Condenser		**Minimum**	**Maximum**
Outdoor ambient operating temperature			
Standard unit	°C	0***	48
Unit with options 28B, 28C (winter operation)	°C	-10	48
Unit with option 28 (winter operation)	°C	-20	48
Available static pressure			
Standard unit (outdoor installation)	Pa	0	0
Unit with option 12 (indoor installation)	Pa	0****	200

* For application requiring operation at less than 8 or 6.8°C respectively, contact Carrier for unit selection using the Carrier electronic catalog.
** For an application, requiring operation up to +15°C leaving water temperature, contact Carrier for the selection of the unit.
*** For operation from 0°C to -10°C the units must be equipped with options 28B, 28C "Winter operation". For operation from 0°C to -20°C the units must be equipped with option 28 "Winter operation". For both options the unit must either be equipped with the evaporator frost protection option (for units without hydronic module option) or the evaporator and hydronic module frost protection option (for units with hydronic module option) or the water loop must be protected against frost by the installer, using an anti-freeze solution.
Maximum outside temperature: For transport and storage of the 30RB units the minimum and maximum allowable temperatures are -20°C and +48°C. It is recommended that these temperatures are used for transport by container.
**** Unit with fans with available pressure up to 200 Pa.
† 30RB 162 units use options 28B, 28C for outside temperatures below 10°C.

Operating range - 30RB 602-802

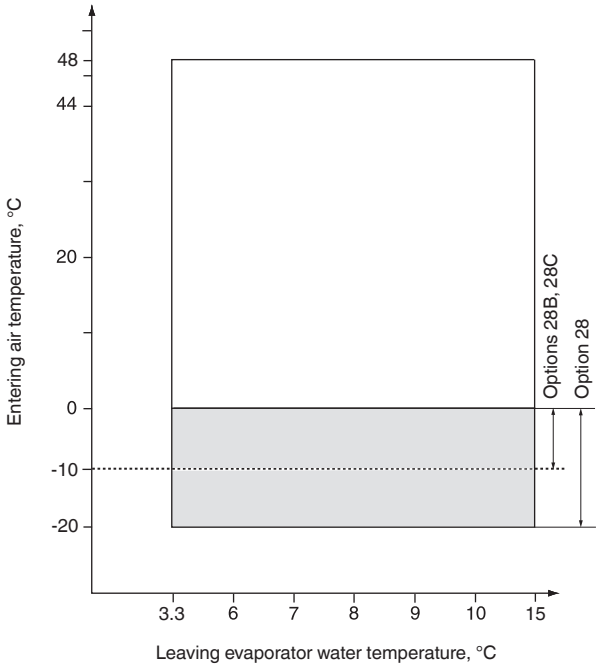

Notes:
Evaporator ΔT = 5 K
The evaporator is protected against frost down to -20°C.

Legend:

Standard unit operating at full load.
Operating range, units equipped with options 28, 28B, 28C "Winter operation".
Option 28 (with variable-speed lead fan for each circuit) allows operation down to -20°C outside temperature.
Options 28B, 28C (with two-speed lead fan for each circuit) allows operation down to -10°C outside temperature. In addition to options 28, 28B, 28C the unit must either be equipped with the evaporator frost protection option (for units without hydronic module option) or the evaporator and hydronic module frost protection option (for units with hydronic module option) or the water loop must be protected by the installer by adding a frost protection solution.

Dimensions/clearances

30RB	X
602-672	5992
732-802	7186

30RB 602-802

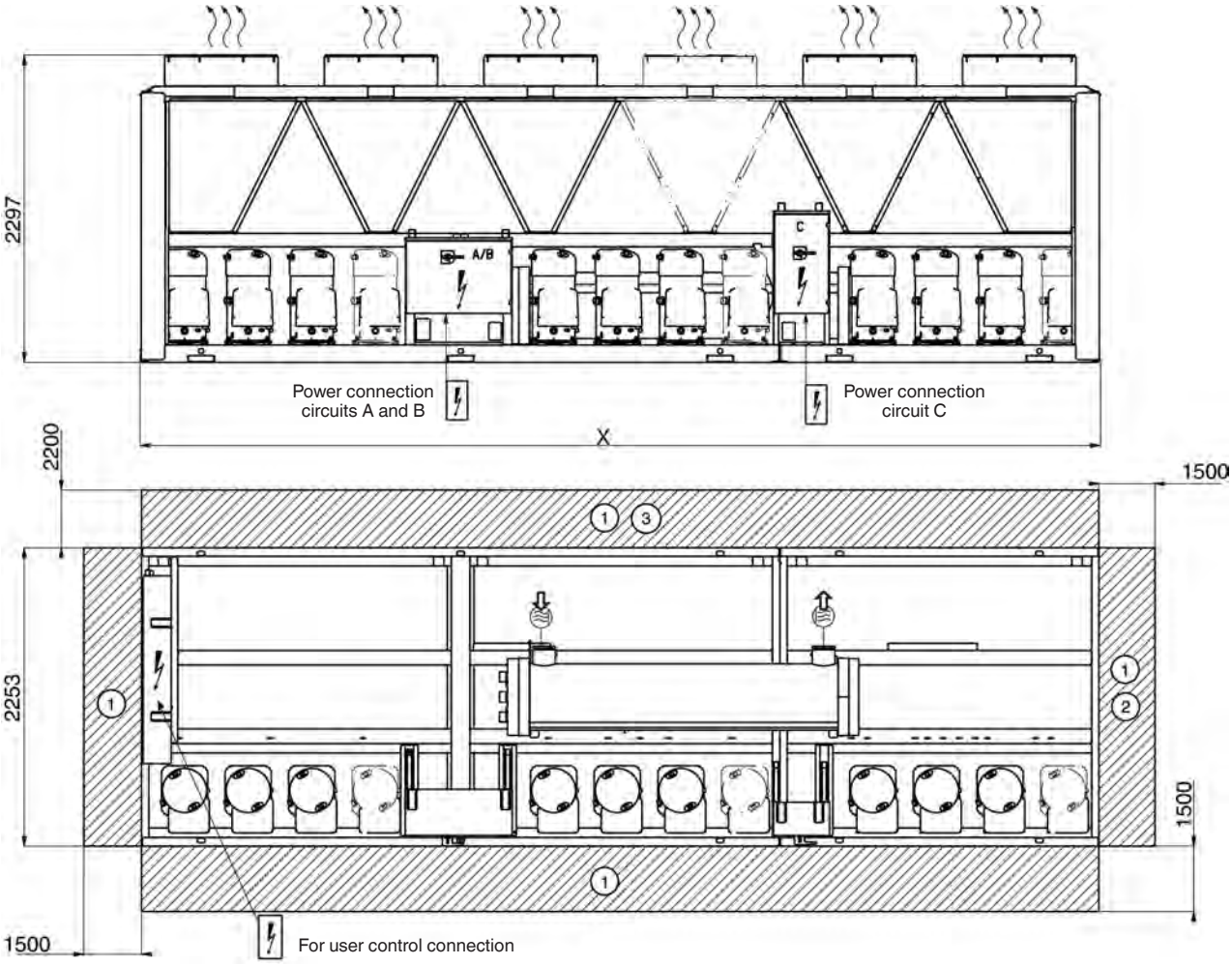

Legend:

All dimensions are in mm.

(1) Clearances required for maintenance and air flow

(2) Clearances recommended for evaporator tube removal

(3) Clearances recommended for heat exchanger removal

Water inlet

Water outlet

Air outlet, do not obstruct

Note: Drawings are not contractually binding. Before designing an installation, consult the certified dimensional drawings, available on request.

For the positioning of the fixing points, weight distribution points and centre of gravity coordinates please refer to the dimensional drawings.

30XAS

Nominal cooling capacity 232–486 kW

COOLING

AQUAFORCE

The 30XAS AquaForce liquid chillers are the premium solution for industrial and commercial applications where installers, consultants and building owners require optimal performances and maximum quality. The units are designed to operate up to 55 °C outside air temperature.

Compactness

Extended operating envelope

Reduced refrigerant charge

Full list of options - maximum configurability

The AquaForce liquid chillers are designed to meet current and future requirements in terms of energy efficiency and operating sound levels. They use the best technologies available today:

- Twin-rotor screw compressor with a variable capacity valve.
- Single refrigerant R-134a.
- Low-noise generation IV Flying Bird fans made of composite material.
- Aluminium micro-channel heat exchangers (MCHE).
- Pro-Dialog+ control system.

To meet to all environmental and economic requirements, the AquaForce is available in two versions:

- One offers an extremely low noise level while at the same time boasting superior energy efficiency.
- The other offers unequalled energy efficiency to satisfy the most stringent demands of building owners wanting to reduce operating costs to the minimum. This version is also recommended for applications in geographical zones where the air temperature is very high.

Physical data

30XAS		242	282	342	442	482
Cooling						
Air conditioning application as per EN14511-3:2013† - standard unit and unit with option 279*						
Nominal cooling capacity	kW	232	284	334	430	467
ESEER	kW/kW	3.78	3.93	3.99	3.87	3.96
EER	kW/kW	2.76	3.00	3.08	2.93	2.87
Eurovent class cooling		C	B	B	B	C
Air conditioning application†† - standard unit and unit with option 279*						
Nominal cooling capacity	kW	233	285	335	432	469
ESEER	kW/kW	3.85	4.01	4.09	3.97	4.07
EER	kW/kW	2.78	3.03	3.11	2.96	2.91
Air conditioning application as per EN14511-3:2013† - unit with option 119 and unit with options 119/279						
Nominal cooling capacity	kW	245	285	345	461	486
ESEER	kW/kW	3.69	3.69	3.80	3.75	3.79
EER	kW/kW	2.97	3.15	3.24	3.15	3.09
Eurovent class cooling		B	A	A	A	B
Air conditioning application†† - unit with option 119 and unit with options 119/279						
Nominal cooling capacity	kW	245	286	346	462	488
ESEER	kW/kW	3.75	3.76	3.90	3.84	3.89
EER	kW/kW	2.99	3.18	3.28	3.18	3.13
IPLV - standard unit	kW/kW	4.23	4.55	4.72	4.55	4.60
IPLV - unit with option 119*	kW/kW	4.16	4.23	4.44	4.36	4.41
Sound levels - Standard unit						
Sound power level***	dB(A)	99	98	98	103	102
Sound pressure level at 10 m****	dB(A)	67	66	66	70	70
Unit + option 279*						
Sound power level***	dB(A)	94	94	93	97	96
Sound pressure level at 10 m****	dB(A)	62	62	61	65	64
Unit + option 257*						
Sound power level***	dB(A)	92	92	91	95	94
Sound pressure level at 10 m****	dB(A)	60	60	59	62	61
Unit + option 258*						
Sound power level***	dB(A)	89	89	88	92	91
Sound pressure level at 10 m****	dB(A)	57	57	56	59	58
Unit + option 119*						
Sound power level***	dB(A)	96	96	96	98	98
Sound pressure level at 10 m****	dB(A)	64	64	63	66	66
Unit + option 119* + 279*						
Sound power level***	dB(A)	96	96	96	98	98
Sound pressure level at 10 m****	dB(A)	64	64	63	66	66
Dimensions - standard unit						
Length	mm	2410	3604	3604	4798	4798
Width	mm	2253	2253	2253	2253	2253
Height	mm	2297	2297	2297	2297	2297
Dimensions - Unit + options 254/255*						
Length	mm	3604	3604	4798	4798	4798
Width	mm	2253	2253	2253	2253	2253
Height	mm	2297	2297	2297	2297	2297
Operating weight**						
Standard unit		2390	2810	2870	3630	3720
Unit + option 119*	kg	-	3070	3190	3990	4150
Unit + option 254/255*	kg	2540	3060	3140	3950	4070

† Eurovent-certified performances in accordance with standard EN14511-3:2013.
Cooling mode conditions: evaporator water entering/leaving temperature 12°C/7°C, outside air temperature 35°C. evaporator fouling factor 0 m2 K/W

†† Gross performances, not in accordance with EN14511-3:2013. These performances do not take into account the correction for the proportional heating capacity and power input generated by the water pump to overcome the internal pressure drop in the heat exchanger. Evaporator water entering/leaving temperature 12°C/7°C, outside air temperature 35°C. evaporator fouling factor
0 m2 K/W

* Options: 119 = High energy efficiency, 257 = low noise level, 279 = compressor enclosure, 258,= very low sound level, 254 = traditional coils (Cu/Al), 255 = traditional coils (Cu/Al) without slots

** Weights are guidelines only. Refer to the unit nameplate.

*** in dB ref=10-12 W, (A) weighting. Declared dualnumber noise emission values in accordance with ISO 4871 (with an associated uncertainty of +/-3dB(A)). Measured in accordance with ISO 9614-1 and certified by Eurovent.

**** in dB ref 20µPa, (A) weighting. Declared dualnumber noise emission values in accordance with ISO 4871 (with an associated uncertainty of +/-3dB(A)). For information, calculated from the sound power level Lw(A).

Notes:

1 Option 119 can be used with options 254 or 255. Contact your Carrier representative for the performances.

Eurovent certified data

Physical data

30XAS		242	282	342	442	482
Compressors		06T semi-hermetic screw compressors, 50 r/s				
Refrigerant**		R-134a				
No of circuits	kg	1	1	1	1	1
Standard unit						
Refrigerant charge	kg	60	72	73	83	88
	teqCO_2	85.8	103	104.4	118.7	125.8
Unit + option 254/255						
Refrigerant charge	kg	85	95	105	120	130
	teqCO_2	121.6	135.9	150.2	171.6	185.9
Capacity control		Touch Pilot, electronic expansion valve (EXV)				
Minimum capacity	%	30	30	30	30	30
Condensers		All-aluminium micro-channel heat exchanger				
Fans		Axial Flying Bird 4, rotating shroud				
Standard unit and unit + option 119/254*						
Quantity		4	5	6	7	8
Standard unit						
Maximum total air flow	l/s	13667	17083	20500	23917	27333
Max speed	r/s	11.7	11.7	11.7	11.7	11.7
Standard unit + options 119*						
Maximum total air flow	l/s	18055	22569	27083	31597	36111
Max speed	r/s	15.7	15.7	15.7	15.7	15.7
Evaporator		Flooded multi-pipe type				
Water content	l	53	53	53	75	75
Without hydronic module						
Water inlet/outlet connections		Victaulic				
Nominal diameter	in	5	5	5	5	5
Actual outside diameter	mm	141.3	141.3	141.3	141.3	141.3
Maximum water-side pressure†	kPa	1000	1000	1000	1000	1000
With hydronic module (option 116C)						
Water inlet/outlet connections		Victaulic				
Nominal diameter	in	-	4	4	4	4
Actual outside diameter	mm	-	114.3	114.3	114.3	114.3
Expansion tank valume	l	-	50	50	50	50
Maximum water-side pressure	kPa	-	400	400	400	400
Chassis paint colour		Colour code: RAL7035				

† Eurovent-certified performances in accordance with standard EN14511-3:2013.
Cooling mode conditions: evaporator water entering/leaving temperature 12°C/7°C, outside air temperature 35°C. evaporator fouling factor 0 m2 K/W

†† Gross performances, not in accordance with EN14511-3:2013. These performances do not take into account the correction for the proportional heating capacity and power input generated by the water pump to overcome the internal pressure drop in the heat exchanger. Evaporator water entering/leaving temperature 12°C/7°C, outside air temperature 35°C. evaporator fouling factor
0 m2 K/W

* Options: 119 = High energy efficiency, 257 = low noise level, 279 = compressor enclosure, 258,= very low sound level, 254 = traditional coils (Cu/Al), 255 = traditional coils (Cu/Al) without slots

** Weights are guidelines only. Refer to the unit nameplate.

*** in dB ref=10-12 W, (A) weighting. Declared dualnumber noise emission values in accordance with ISO 4871 (with an associated uncertainty of +/-3dB(A)). Measured in accordance with ISO 9614-1 and certified by Eurovent.

**** in dB ref 20µPa, (A) weighting. Declared dualnumber noise emission values in accordance with ISO 4871 (with an associated uncertainty of +/-3dB(A)). For information, calculated from the sound power level Lw(A).

Notes:

1 Option 119 can be used with options 254 or 255. Contact your Carrier representative for the performances.

Eurovent certified data

Electrical data

30XAS		242	282	342	442	482
Power circuit						
Nominal power supply	V-ph-Hz	400-3-50				
Voltage range	V	360-440				
Maximum supply cable section	mm^2	2 x 150	2 x 95	2 x 150	2 x 150	2 x 240
Short-circuit stability current (TN system)*	kA	38	50	50	50	50
Control circuit		24 V via internal transformer				
Start-up current**	A	303	388	388	587	587
Standard unit						
Cosine Phi maximum***		0.89	0.88	0.88	0.87	0.87
Cosine Phi nominal****		0.85	0.85	0.86	0.84	0.85
Total harmonic distortion	%	0	0	0	0	0
Maximum power input†	kW	101	113	134	184	213
Nominal unit current draw****	A	141	153	174	258	278
Maximum unit current draw (Un)†	A	165	185	218	305	353
Maximum unit current draw (Un) with option 231†	A	148	167	201	284	333
Maximum current draw (Un -10%)***	A	180	198	231	324	375
High energy efficiency unit (option 119)						
Cosine Phi maximum***		0.88	0.88	0.88	0.87	0.87
Cosine Phi nominal****		0.84	0.85	0.85	0.83	0.84
Maximum power input†	kW	105	118	139	190	221
Nominal current draw****	A	141	153	175	254	271
Maximum current draw (Un)†	A	172	194	229	318	368
Maximum current draw (Un -10%)***	A	187	207	242	337	390

* kA eff: efficiency value: rms for English version
** Instantaneous start-up current (locked rotor current in star connection of the compressor).
*** Values obtained at operation with maximum unit power input.
**** Values obtained at standard Eurovent unit operating conditions: air 35°C, water 12/7°C.
† Values obtained at operation with maximum unit power input. Values given on the unit name plate.

Note:
Motor and fan electrical data if the unit operates at Eurovent conditions (motor ambient temperature 50°C): 1.9 A
Start-up current: 8.4 A
Power input: 760 W

Remote management (EMM option 156)

- The Energy Management Module offers extended remote control possibilities:
  - Room temperature: permits set-point reset based on the building indoor air temperature (with Carrier thermostat)
  - Set point reset: ensures reset of the cooling set-point based on a 4-20 mA or 0-5 V signal
  - Demand limit: permits limitation of the maximum chiller power or current based on a 0-10 V signal
  - Demand limit 1 and 2: closing of these contacts limits the maximum chiller power or current to two predefined values.
  - User safety: this contact can be used for any customer safety loop; opening of the contact generates a specific alarm
  - Ice storage end: when ice storage has finished, this input permits return to the second set-point (unoccupied mode)
  - Time schedule override: closing of this contact cancels the time schedule effects
  - Out of service: this signal indicates that the chiller is completely out of service
  - Chiller capacity: this analogue output (0-10 V) gives an immediate indication of the chiller capacity

Options

Options	No.	Description	Advantages	Use 30XAS
Corrosion protection, traditional coils	2B	Factory application of Blygold Polual treatment on the copper/aluminium coils	Improved corrosion resistance, recommended for industrial, rural and marine environments	30XAS 242-482
Corrosion protection, traditional coils	3A	Fins made of pre-treated aluminium (polyurethane and epoxy)	Improved corrosion resistance, recommended for moderate marine and urban environments	30XAS 242-482
Unit equipped for air discharge ducting	10	Fans equipped with discharge connection flanges - maximum available pressure 60 Pa	Facilitates connections to the discharge ducts	30XAS 242-482
IP54 control box	20A	Increased leak tightness of the unit	Protects the inside of the electrical box from dusts, water and sand. In general, this option is recommended for installations in polluted environments	30XAS 242-482
Grilles and enclosure panels	23	Metal grilles on the 4 unit sides, plus side enclosure panels at each end of the coil	Improves aesthetics, protection against intrusion to the unit interior, coil and piping protection against impacts.	30XAS 242-482
Enclosure panels	23A	Side enclosure panels at each end of the coil	Improves aesthetics, coil and piping protection against impacts.	30XAS 242-482
Winter operation down to -20 °C	28	Fan speed control via frequency converter	Stable unit operation for air temperature down to -20 °C	30XAS 242-482
Evaporator frost protection	41A	Electric resistance heater on the evaporator and discharge valve	Evaporator frost protection down to -20 °C outside temperature	30XAS 242-482
Evap.and hydraulic mod. frost protection	41B	Electric resistance heater on evaporator, discharge valve and hydronic module	Evaporator and hydronic module frost protection down to -20 °C outside temperature	30XAS 282-482
Total heat recovery	50	Unit equipped with additional heat exchanger in parallel with the condenser coils.	Production of free hot-water simultaneously with chilled water production	30XAS 242-482
Master/slave operation	58	Unit equipped with supplementary water outlet temperature sensor kit to be field-installed allowing master/slave operation of two units connected in parallel	Optimised operation of two units connected in master/ slave operation with operating time equalisation	30XAS 242-482
Service valve set	92	Liquid line valve (evaporator inlet), compressor suction and discharge line valves and economiser line valve	Allow isolation of various refrigerant circuit components for simplified service and maintenance	30XAS 242-482
Compressor discharge valves	93A	Shut-off valve on the compressor discharge piping	Simplified maintenance	30XAS 242-482
HP dual-pump hydronic module	116C	Complete hydronic module equipped with water filter, expansion tank with relief valve, two high pressure pumps, drain valve and water flow control valve. For more details, refer to the dedicated chapter	Easy and fast installation (plug & play). Increased system reliability	30XAS 282-482
High energy efficiency	119	Higher air flow through the condenser coils improving heat exchange efficiency on the condenser	Energy cost reduction and extended operating envelope (full load operation at higher air temperature)	30XAS 242-482
J-Bus gateway	148B	Two-directional communication board complying with JBus protocol	Connects the unit by communication bus to a building management system	30XAS 242-482
Lon gateway	148D	Two-directional communication board complying with Lon Talk protocol	Connects the unit by communication bus to a building management system	30XAS 242-482
Bacnet over IP	149	Two-directional high-speed communication using BACnet protocol over Ethernet network (IP)	Easy and high-speed connection by ethernet line to a building management system. Allows access to multiple unit parameters	30XAS 242-482
Energy Management Module	156	Control board with additional inputs/outputs. See Energy Management Module option chapter	Extended remote control capabilities (Set-point reset, ice storage end, demand limits, boiler on/off command...)	30XAS 242-482
Touch Pilot control, 7" user interface	158A	Touch Pilot control supplied with a 7 inch colour touch screen user interface	Enhanced ease of use.	30XAS 242-482
Leak detection	159	0-10 V signal to report any refrigerant leakage in the unit directly on the controlller (the leak detector itself must be supplied by the customer)	Immediate customer notification of refrigerant losses to the atmosphere, allowing timely corrective actions	30XAS 242-482
Dual relief valves installed w/ 3-way valve	194	Three-way valve upstream of the relief valves on the evaporator and the oil separator	Valve replacement and inspection facilitated without refrigerant loss. Comforms to European standard EN378/BGVD4	30XAS 242-482
Compliance with Russian regulations	199	EAC certification	Conformance with Russian regulations	30XAS 242-482
Compliance with Australian regulations	200	Unit approved to Australian code	Conformance with Australian regulations	30XAS 242-482
Power factor correction	231	Capacitors for automatic regulation of power factor (cos phi) value to 0.95.	Reduction of the real electrical power, compliance with minimum power factor limit set by utilities	30XAS 242-482
Traditional coils (Cu/Al)	254	Coils made of copper tubes with aluminium fins	None	30XAS 242-482
Traditional coils (Cu/Al) without slots	255	Coils made of copper tubes with aluminium fins without slots	None	30XAS 242-482
Insulation of the evap. in/out ref.lines	256	Thermal insulation of the evaporator entering/leaving refrigerant lines with flexible, anti-UV insulant	Prevents condensation on the evaporator entering/ leaving refrigerant lines	30XAS 242-482
Low noise level	257	Sound insulation of main noise sources (includes option 279)	5 to 12 dB(A) quiter than standard unit (depending model and size). Refer to the physical data table for detailed values	30XAS 242-482
Very low sound level	258	Enhanced sound insulation of main noise sources combined with fans speed management (includes option 279)	2 to 3 dB(A) quiter than unit with option 257. Refer to the physical data table for detailed values	30XAS 242-482
Enviro-Shield anti-corrosion protection	262	Coating by conversion process which modifies the surface of the aluminum producing a coating that is integral to the coil. Complete immersion in a bath to ensure 100% coverage. No heat transfer variation, tested 4000 hours salt spray per ASTM B117	Improved corrosion resistance, recommended for use in moderately corrosive environments	30XAS 242-482
Super Enviro-Shield anti-corrosion protection	263	Extremely durable and flexible epoxy polymer coating applied on micro channel heat exchangers by electro coating process, final UV protective topcoat. Minimal heat transfer variation, tested 6000 hours constant neutral salt spray per ASTM B117, superior impact resistance per ASTM D2794	Improved corrosion resistance, recommended for use in extremely corrosive environments	30XAS 242-482

Options	No.	Description	Advantages	Use 30XAS
Compressor enclousure	279	Compressor sound enclosure	4 to 10 dB(A) quiter than standard unit. Refer to the physical data table for detailed values	30XAS 242-482
Evaporator with aluminium jacket	281	Evaporator covered with an aluminium sheet for thermal insulation protection	Improved resistance to aggressive climate conditions	30XAS 242-482
230 V electrical plug	284	230 V AC power supply source provided with plug socket and transformer (180 VA, 0,8 Amps)	Permits connection of a laptop or an electrical device during unit commissioning or servicing	30XAS 242-482
Carrier Connect link (BSS regions only)	298	3G router board Note 1: Require option 149 Note 2: When more than one machine is installed on site, only one of them shall be equipped with option 298, while all of them must be equipped with option 149 Note 3: If a Carrier® PlantCTRL™ is on site, option 298 shall be integrated in the Carrier® PlantCTRL™ while option 149 is still mandatory for each single unit.	Enabler for Carrier Connect service offer	30XAS 242-482

Fan with available pressure (option 10)

This option allows a duct connection at the discharge side of the condenser fan. The unit is supplied with axial fans with a speed of 15.8 r/s (option 119), each equipped with a duct connection frame. The chiller can operate up to 60 Pa with reduced performance.

Selection example

The base capacities are those of option 119. To obtain capacities at various pressure drops use the correction factors in the table opposite.

Selection at Eurovent conditions

30XAS options 119 + 10		Sizes 282-482			
Fan pressure drop, Pa		0	20	40	60
		Correction factor			
Air flow	% l/s	1	-3.5	-7.5	-12.1
Cooling capacity	% kW	0	-0.5	-1.0	-1.5
EER	% kW/kW	0	-1.5	-3.5	-5.0
Power input	% kW	0	+1.0	+2.5	+3.5

Example

30XAS 282 with 40 Pa pressure drop

Values for option 119 at the following conditions:

35°C outside air temperature

12/7°C entering/leaving water temperature

30XAS 282		0 Pa	Correction factor, %	40 Pa
Air flow	l/s	22569	-7.5	20876
Cooling capacity	kW	280	-1	277
EER	kW/kW	3.17	-3.5	3,06
Power input	kW	88	+3.5	90

Total heat reclaim (option 50)

Suitable for heating, domestic hot water preparation, agriculture and food industry, industrial processes and other hot-water requirements.

With the total heat reclaim option it is possible to reduce the energy consumption bill considerably compared to conventional heating equipment such as fossil fuel boilers or electric water tanks.

Operating principle

If hot water production is required, the compressor discharge gases are directed towards the heat reclaim condenser. The refrigerant releases its heat to the hot water that leaves the condenser at a temperature of up to 60°C. In this way 100% of the heat rejected by the liquid chiller can be used to produce hot water. When the demand for heat is satisfied, the hot gas is again directed towards the air condenser where the heat is rejected to the outside air by the fans. Hot water temperature control is ensured by the chiller Pro-Dialog+ control.

Note: Heat reclaim is only possible, if the unit produces cold water at the same time.

Condenser water temperature (°C)	Minimum	Maximum
Entering temperature at start-up	12.5*	55
Entering temperature during operation	20	55
Leaving temperature during operation	25	60
Evaporator water temperature (°C)	**Minimum**	**Maximum**
Entering temperature at start-up	-	45
Entering temperature during operation	6.8	21
Leaving temperature during operation	3.3	15

* The entering water temperature at start-up must not fall below 12.5°C. For installations with a lower temperature a three-way valve must be used.

Note: If the evaporator leaving water temperature is below 4°C, a glycol-water solution or the frost protection option must be used.

In part-load operation, the limitation of the condenser leaving water temperature is due to the operating range of the screw compressor. If the condenser leaving water temperature is above the limit value given in the curves on the right, the unit will automatically change over to the mode without heat recovery:

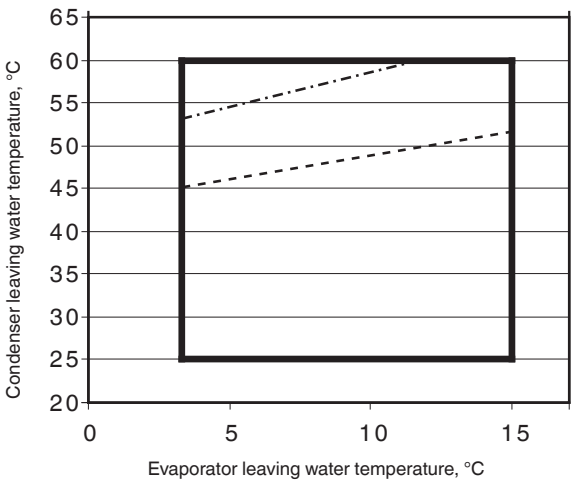

Full load
Part load limit, approx. 60%
Minimum load limit, approx. 30%

Part load operating limits (evaporator leaving water temperature = 7°C)

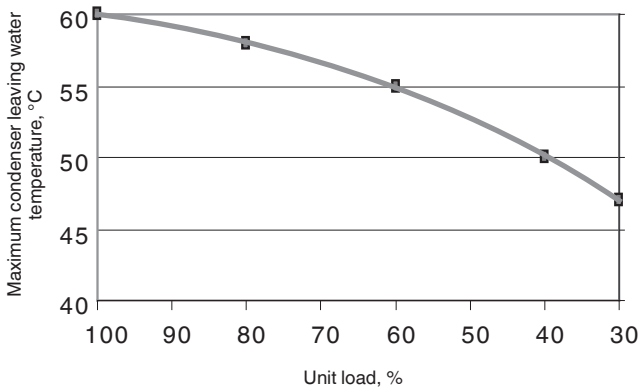

Physical data, option 50

These are the same as for the standard unit except:

30XAS heat reclaim mode		282	342	442	482
Cooling capacity*	kW	278	329	428	475
Heating capacity*	kW	349	411	538	599
Total power input (unit)*	kW	77.7	90.2	120.6	136.0
Total energy efficiency ratio (EER)	kW/kW	3.58	3.65	3.55	3.49
Total coefficient of performance (COP)	kW/kW	4.49	4.56	4.46	4.40
Operating weight**	kg	3260	3320	4190	4280
Refrigerant charge	kg	73	78	90	95
Heat reclaim condenser		Flooded shell-and-tube condenser			
Water volume	l	55	55	68	68
Water connection		Victaulic			
Diameter	inch	4	4	4	4
Outside diameter	mm	114.3	114.3	114.3	114.3

* Nominal conditions: Entering/leaving water temperature: evaporator 12°C/7°C; heat reclaim condenser: 40°C/45°C; evaporator and heat reclaim condenser fouling factor = 0 m^2 K/kW. Gross performances, not in accordance with EN14511-3:2011. These performances do not take into account the correction for the proportional heating capacity and power input generated by the water pump to overcome the internal pressure drop in the heat exchanger.

** Weights are for guidance only

Features and advantages

Very economical operation

- Extremely high full load and part load energy efficiency:
  - Eurovent energy efficiency class A to C.
  - Standardised Eurovent values in accordance with EN 14511-3:2013: EER up to 3.2 and ESEER up to 4.
  - Twin-rotor screw compressor equipped with a high-efficiency motor and a variable capacity valve that permits exact matching of the cooling capacity to the load.
  - All aluminium condenser with high-efficiency micro-channels.
  - Flooded shell-and-tube evaporator to increase the heat exchange efficiency.
  - Electronic expansion device permitting operation at a lower condensing pressure and improved utilisation of the evaporator heat exchange surface (superheat control).
  - Economizer system with electronic expansion device for increased cooling capacity

Low operating sound levels

- Compressor
  - Discharge dampers integrated in the oil separator (Carrier patent).
  - Silencer on the economiser return line.
  - Acoustic compressor and oil separator enclosure reducing radiated noise (option).
- Condenser section
  - Condenser coils in V-shape with an open angle, allowing quieter air flow across the coil
  - Low-noise 4th generation Flying Bird fans, made of a composite material (Carrier patent) are now even quieter and do not generate intrusive low-frequency noise
  - Rigid fan mounting preventing start-up noise (Carrier patent)

Easy and fast installation

- Integrated hydronic module (option)
  - Centrifugal high-pressure dual water pump, with operating time balancing and automatic changeover to the back-up pump if a fault develops
  - Water filter protecting the water pump against circulating debris
  - High-capacity membrane expansion tank ensures pressurisation of the water circuit
  - Thermal insulation and aluminium protection (option)
  - Pressure sensor to check filter pollution and for direct numerical display of the water flow rate with an estimate of the instantaneous cooling capacity at the control interface
  - Water flow control valve
- Simplified electrical connections
  - Main disconnect switch with high trip capacity
  - Transformer to supply the integrated control circuit (400/24 V)
- Fast commissioning
  - Systematic factory operation test before shipment
  - Quick-test function for step-by-step verification of the instruments, expansion devices, fans and compressor

Environmental care

- R-134a refrigerant
  - Refrigerant of the HFC group with zero ozone depletion potential
  - 30% reduction in the refrigerant charge through the use of micro-channel heat exchangers
- Leak-tight refrigerant circuit
  - Reduction of leaks as no capillary tubes and flare connec-tions are used
  - Verification of pressure transducers and temperature sensors without transferring refrigerant charge
  - Liquid line service valve for simplified maintenance (option)

Absolute reliability

- Screw compressor
  - Industrial-type screw compressor with oversized bearings and motor cooled by suction gas
  - All compressor components are easily accessible on site minimising down-time
  - Protection increased by an electronic board
- Air condenser

  All aluminium micro-channel heat exchangers (MCHE) with high corrosion resistance. The all aluminium design eliminates the formation of galvanic currents between aluminium and copper that cause coil corrosion in saline or corros ive environments
- Evaporator

  Thermal insulation with aluminium sheet finish for perfect resistance to external aggression (mechanical and UV protection)
- Auto-adaptive control
  - Control algorithm prevents excessive compressor cycling (Carrier patent)
  - Automatic compressor unloading in case of abnormally high condensing pressure. If condenser coil fouling or fan failure occurs, the AquaForce continues to operate, but at reduced capacity
- Exceptional endurance tests
  - Partnerships with specialised laboratories and use of limit simulation tools (finite element calculation) for the design of critical components.
  - Transport simulation test in the laboratory on a vibrating table. The test is based on a military standard and equi-valent to 4000 km by truck.
  - Salt mist corrosion resistance test in the laboratory for increased corrosion resistance

Remote management (standard)

AquaForce is equipped with an RS485 serial port that offers multiple remote control, monitoring and diagnostic possibilities. Carrier offers a vast choice of control products, specially designed to control, manage and supervise the operation of an air conditioning system. Please consult your Carrier representative for more information.

AquaForce also communicates with other building management systems via optional communication gateways. A connection terminal allows remote control of the AquaForce by wired cable:

- Start/stop: opening of this contact will shut down the unit
- Dual set-point: closing of this contact activates a second set-point (example: unoccupied mode)
- Demand limit: closing of this contact limits the maximum chiller capacity to a predefined value
- Heat reclaim (option): closing of this contact allows heat reclaim mode operation
- Water pump 1 and 2 control (not available for hydronic module option 116): these outputs control the contactors of one or two evaporator water pumps
- Operation indication: this volt-free contact indicates that the chiller is operating (cooling load) or that it is ready to operate (no cooling load)
- Alert indication: this volt-free contact indicates the necessity to carry out a maintenance operation or the presence of a minor fault
- Alarm indication: this volt-free contact indicates the presence of a major fault that has led to the shut-down of one or several refrigerant circuits

The Carrier 06T screw compressors benefit from Carrier's long experience in the development of twin-rotor screw compressors.

06T screw compressor

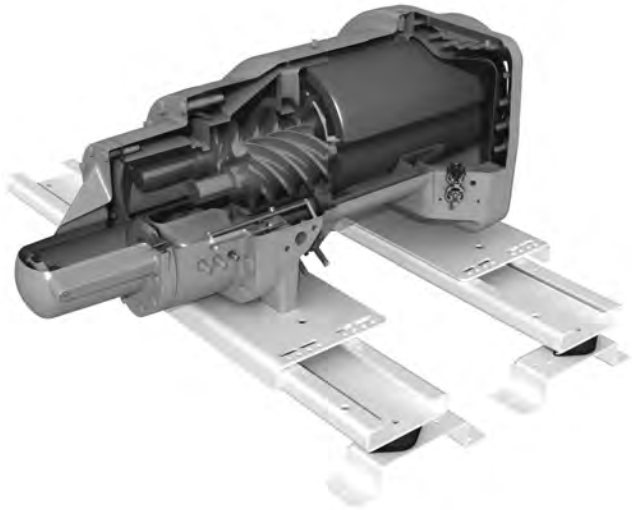

The compressor is equipped with bearings with oversized rollers, oil pressure lubricated for reliable and durable operation, even at maximum load.A variable control valve controlled by the oil pressure permits infinitely variable cooling capacity.

This system allows optimal adjustment of the compressor cooling capacity and ensures exceptionally high stability of the chilled water leaving temperature. Among the other advantages: if a fault occurs e.g. if the condenser is fouled or at very high outside temperature, the compressor does not switch off, but continues operation with a reduced capacity (unloaded mode).

The compressor is equipped with a separate oil separator that minimises the amount of oil in circulation in the refrigerant circuit and with its integrated silencer considerably reduces discharge gas pulsations for much quieter operation.

Controls

Touch Pilot Control

- New innovative smart control features:
  - An intuitive and user-friendly, coloured, 5'' interface (7" optional)
  - Direct access to the unit's technical drawings and the main service documents
  - Screen-shots with coincisive and clear information in local languages
  - Complete menu, customised for different users (end user, service personnel and Carrier-factory technicians)
  - Easy access to the controller box with inclined touch screen mounting to ensure legibility under any lighting conditions
  - Safe operation and unit setting: password protection ensures that unauthorised people cannot modify any advanced parameters
  - Simple and "smart" intelligence uses data collection from the constant monitoring of all machine parameters to optimise unit operation.
- Energy management:
  - Internal time schedule clock controls chiller on/off times and operation at a second set-point
  - The DCT (Data Collection Tool) records the alarms history to simplify and facilitate service operations.

Touch Pilot control, 5" user interface

Operating limits

Evaporator water temperature	°C	Minimum	Maximum
Water entering temperature at start-up		-	45*
Water entering temperature during operation		6.8	21
Water leaving temperature during operation		3.3	15

Note: If the leaving water temperature is below 4°C, a glycol/water solution or the frost protection option must be used.

Condenser air temperature	°C	Minimum	Maximum
Storage		-20	68
Operation:			
Standard unit		-10	55**
With option 28: winter operation		-20	55**
With option 119: high energy efficiency***		-10	55****

Note: If the air temperature is below 0°C, a glycol/water solution or the frost protection option must be used.

* Based on the installation type and the air temperature
** Part load, based on the water temperature
*** Recommended for operation above 46°C
**** Part-load operation

Evaporator water flow rate (l/s)		
30XAS	**Minimum**	**Maximum***
242	3.2	30.7
282	3.7	30.7
342	4.4	30.7
442	5.8	41.0
482	6.5	41.0

* The maximum water flow rate corresponds to a pressure drop of 100 kPa.

Operating range

30XAS standard unit

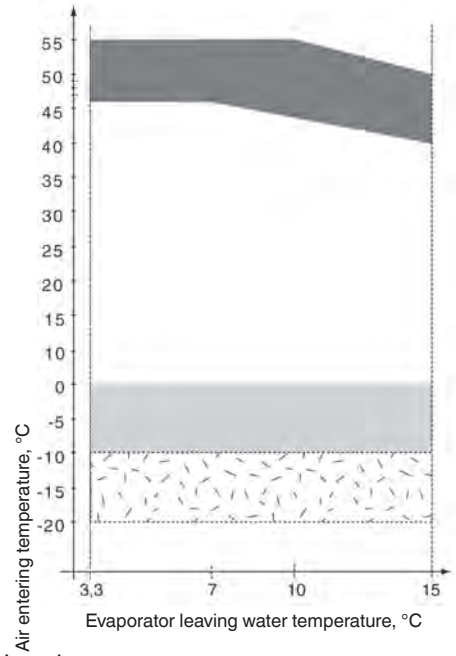

30XAS high energy efficiency unit or option 119

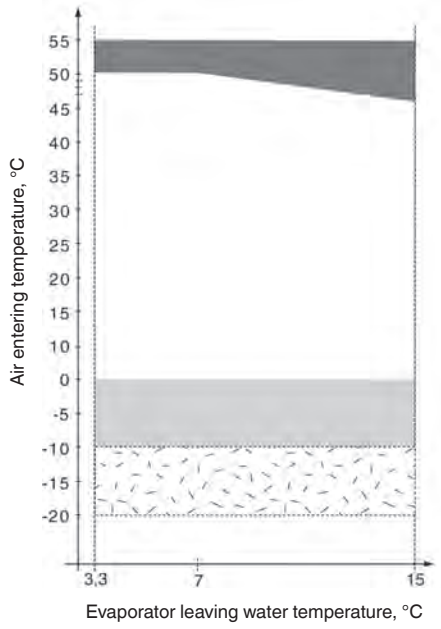

Legend

Operating range, unirt equipped with option 28 "Winter operation"

Below 0°C air temperature the unit must either be equipped with the evaporator frost protection option (41A or 41B), or the water loop must be protected against frost by using a frost protection solution (by the installer).

Part load average

Dimensions/clearances

30XAS 242

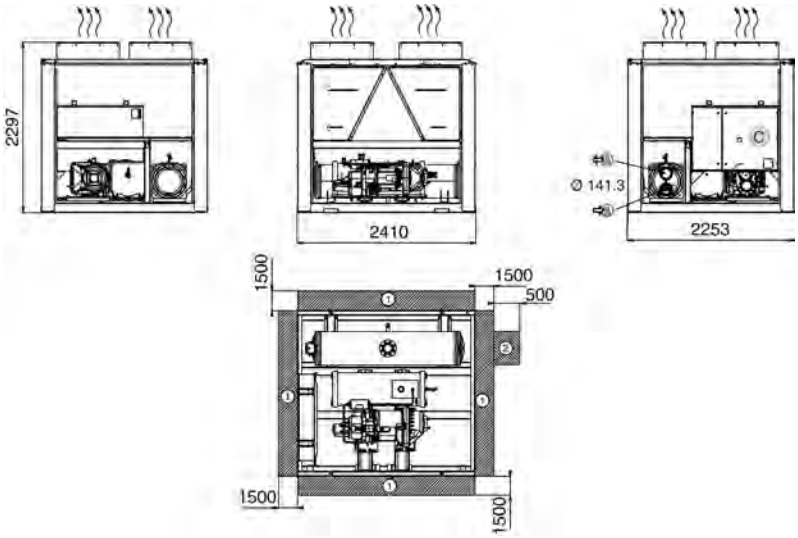

30XAS 282-342

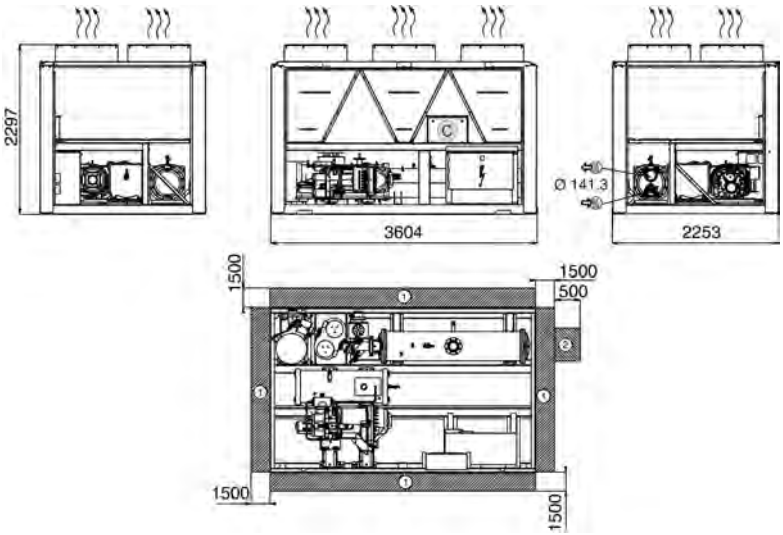

30XAS 442-482

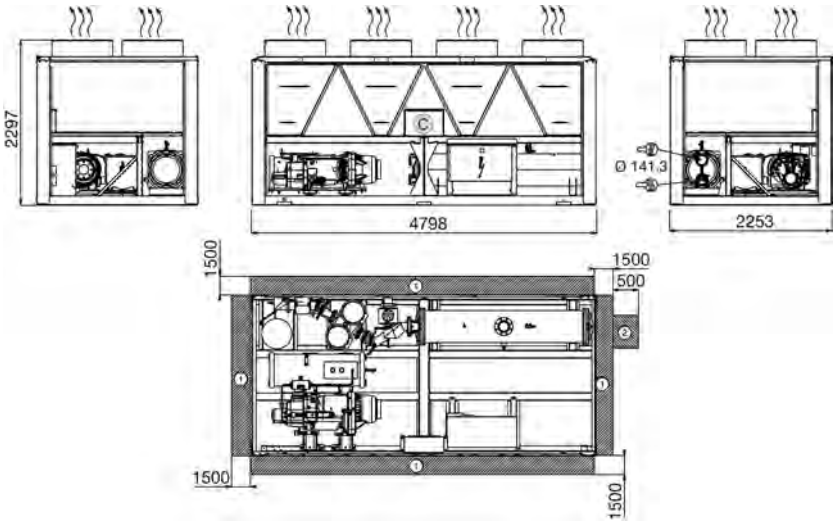

Legend
All dimensions are given in mm.

1. Required clearances for maintenance and air flow
2. Recommended space for evaporator tube removal
- Water inlet
- Water outlet
- Air outlet – do not obstruct
- Power supply connection
- Control circuit connection

Note: Drawings are not contractually binding. Before designing an installation, consult the certified dimensional drawings, available on request·

30XAS 282-342 - heat reclaim unit (option 50)

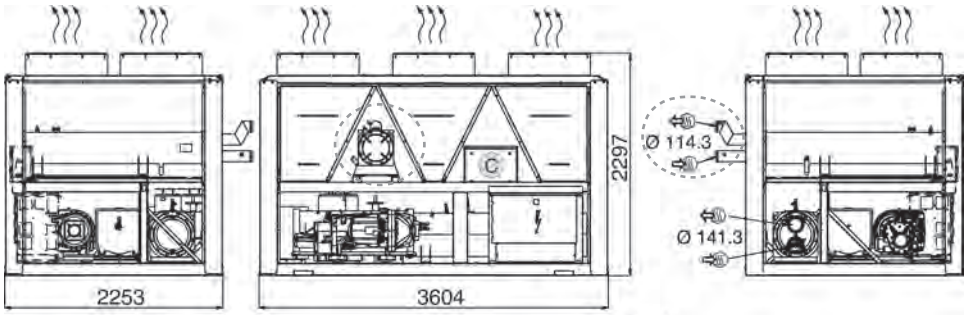

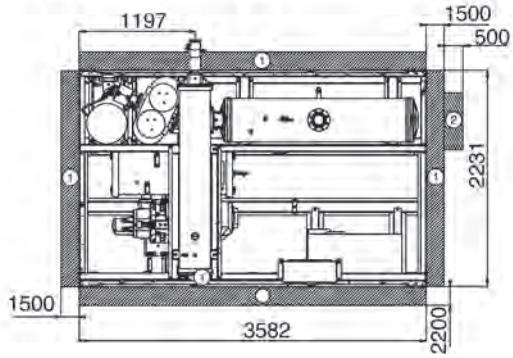

Specific elements for option 50

Attention: The Victaulic flange sleeves of the condenser are not installed, but supplied with the unit. The sealing joints are in the control box. The temperature sensors and the condenser flow switch are wired and fixed in the machine. They must be installed as described in the chapter "Condenser water connections" in the Installation Manual.

Note: Drawings are not contractually binding. Before designing an installation, consult the certified dimensional drawings supplied with the unit or available on request.

For the positioning of the fixing points, weight distribution and centre of gravity coordinates please refer to the dimensional drawings.

30XAS 442-482 - heat reclaim unit (option 50)

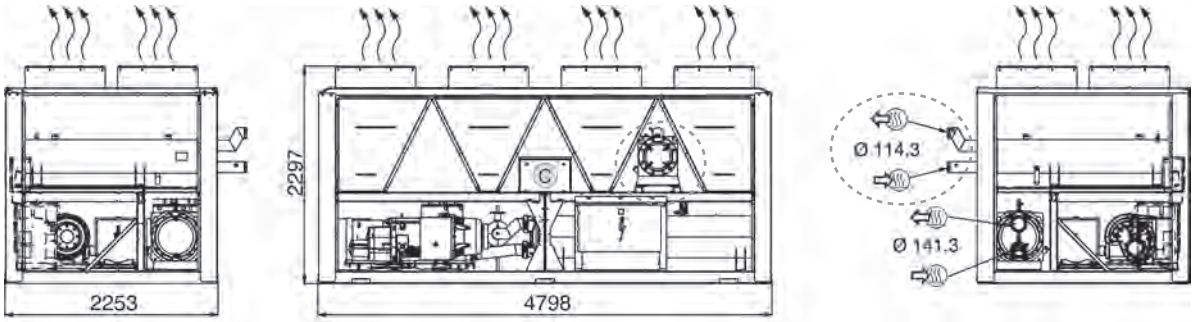

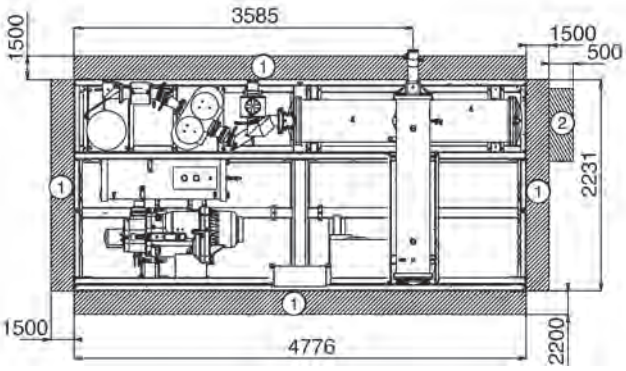

Legend
All dimensions are given in mm.

1 Required clearances for maintenance and air flow

2 Recommended space for evaporator tube removal

Water inlet

Water outlet

Air outlet – do not obstruct

Power supply connection

Control circuit connection

30XA

Nominal cooling capacity 267-1682 kW

AQUAFORCE®

Class A efficiency

Extended operating envelope

Reduced refrigerant charge

Full list of options - maximum configurability

The AquaForce liquid chillers are the premium solution for industrial and commercial applications where installers, consultants and building owners require optimal performances and maximum quality. The units are designed to operate up to 55 °C outside air temperature.

The AquaForce liquid chillers are designed to meet current and future requirements in terms of energy efficiency and operating sound levels. They use the best technologies available today:

- Twin-rotor screw compressors with a variable capacity valve.
- Single refrigerant R-134a.
- Low-noise generation IV Flying Bird fans made of composite material.
- Aluminium micro-channel heat exchangers (MCHE)
- Touch Pilot control system.

To meet to all environmental and economic requirements, the AquaForce is available in two versions:

- One offers an extremely low noise level while at the same time boasting superior energy efficiency.
- The other offers unequalled energy efficiency to satisfy the most stringent demands of building owners wanting to reduce operating costs to the minimum. This version is also recommended for applications in geographical zones where the air temperature is very high.

Physical data, sizes 252 to 852

EUROVENT CERTIFIED PERFORMANCE
www.eurovent-certification.com

30XA		252	302	352	402	452	504	502	602	702	752	802	854	852
Cooling														
Air conditioning application as per EN14511-3:2013† - standard unit and unit with option 279*														
Nominal cooling capacity	kW	267	291	318	378	426	-	473	601	654	691	759	-	807
ESEER	kW/kW	3.94	4.20	4.20	4.10	4.13	-	4.09	4.08	4.10	4.00	4.06	-	4.09
EER	kW/kW	3.00	2.96	2.98	3.08	2.89	-	2.93	3.03	3.11	2.91	2.88	-	2.98
Eurovent class cooling		B	B	B	B	C	-	B	B	A	B	C	-	B
Air conditioning application††- standard unit														
Nominal cooling capacity	kW	267	291	319	379	427	-	475	603	656	693	761	-	809
ESEER	kW/kW	4.03	4.30	4.31	4.26	4.30	-	4.25	4.25	4.25	4.14	4.19	-	4.25
EER	kW/kW	3.02	2.98	3.01	3.12	2.92	-	2.97	3.07	3.15	2.94	2.91	-	3.01
Air conditioning application as per EN14511-3:2013† - unit with option 119														
Nominal cooling capacity	kW	273	298	325	391	442	498	499	612	679	723	785	824	841
ESEER	kW/kW	3.89	3.96	4.01	3.88	3.93	3.74	3.93	3.84	4.07	3.87	3.92	3.76	4.03
EER	kW/kW	3.13	3.10	3.09	3.21	3.08	3.07	3.15	3.13	3.31	3.08	3.10	3.10	3.24
Eurovent class cooling		A	A	B	A	B	B	A	A	A	B	A	A	A
Air conditioning application††- standard unit + option 119*														
Nominal cooling capacity	kW	273	298	325	392	443	499	500	614	681	726	787	826	844
ESEER	kW/kW	3.97	4.04	4.10	4.03	4.08	3.85	4.08	4.00	4.22	4.01	4.05	3.88	4.18
EER	kW/kW	3.15	3.12	3.12	3.25	3.12	3.11	3.19	3.18	3.35	3.12	3.13	3.14	3.28
IPLV - standard unit	kW/kW	4.41	4.50	4.77	4.73	4.75	-	4.77	4.54	4.67	4.58	4.55	-	4.66
IPLV - unit with option 119*	kW/kW	4.31	4.37	4.56	4.38	4.51	4.33	4.51	4.35	4.64	4.40	4.47	4.41	4.55
Sound levels - Standard unit														
Sound power level***	dB(A)	99	99	99	98	101	-	98	100	98	103	102	-	100
Sound pressure level at 10 m****	dB(A)	67	67	67	65	69	-	65	67	65	70	70	-	67
Standard unit + option 279*														
Sound power level***	dB(A)	89	89	89	92	93	-	93	95	94	96	96	-	95
Sound pressure level at 10 m****	dB(A)	57	57	57	60	61	-	61	62	61	63	64	-	63
Standard unit + option 257*														
Sound power level***	dB(A)	87	87	87	90	91	-	91	93	92	94	94	-	94
Sound pressure level at 10 m****	dB(A)	55	55	55	58	59	-	59	60	59	61	61	-	61
Standard unit + option 258*														
Sound power level***	dB(A)	-	-	-	-	89	-	89	91	90	91	92	-	91
Sound pressure level at 10 m****	dB(A)	-	-	-	-	57	-	56	58	57	59	59	-	59
Standard unit + option 119*														
Sound power level***	dB(A)	100	100	100	100	102	100	100	102	100	104	104	102	102
Sound pressure level at 10 m****	dB(A)	68	68	68	68	70	68	68	69	68	71	71	70	69
Standard unit + option 119* + 279*														
Sound power level***	dB(A)	94	94	95	96	96	96	96	98	97	98	99	98	98
Sound pressure level at 10 m****	dB(A)	62	62	63	64	64	64	64	66	64	65	66	65	65
Dimensions - standard unit														
Length	mm	3604	3604	3604	4798	4798	4798	5992	7186	7186	7186	7186	7186	8380
Width	mm	2253	2253	2253	2253	2253	2253	2253	2253	2253	2253	2253	2253	2253
Height	mm	2297	2297	2297	2297	2297	2297	2297	2297	2297	2297	2297	2297	2297
Dimensions - standard unit + options 254/255*														
Length	mm	3604	3604	4798	4798	4798	-	5992	7186	7186	8380	8380	-	8380
Width	mm	2253	2253	2253	2253	2253	-	2253	2253	2253	2253	2253	-	2253
Height	mm	2297	2297	2297	2297	2297	-	2297	2297	2297	2297	2297	-	2297

† Eurovent-certified performances in accordance with standard EN14511-3:2013.
Cooling mode conditions: evaporator water entering/leaving temperature 12°C/7°C, outside air temperature 35°C. evaporator fouling factor 0 m2 K/W

†† Gross performances, not in accordance with EN14511-3:2013. These performances do not take into account the correction for the proportional heating capacity and power input generated by the water pump to overcome the internal pressure drop in the heat exchanger. Evaporator water entering/leaving temperature 12°C/7°C, outside air temperature 35°C. evaporator fouling factor 0 m2 K/W

* Options: 119 = High energy efficiency, 257 = low noise level, 279 = compressor enclosure, 258,= very low sound level, 254 = traditional coils (Cu/Al), 255 = traditional coils (Cu/Al) without slots

** Weights are guidelines only. Refer to the unit nameplate.

*** in dB ref=10^{-12} W, (A) weighting. Declared dualnumber noise emission values in accordance with ISO 4871 (with an associated uncertainty of +/-3dB(A)). Measured in accordance with ISO 9614-1 and certified by Eurovent.

**** in dB ref 20µPa, (A) weighting. Declared dualnumber noise emission values in accordance with ISO 4871 (with an associated uncertainty of +/-3dB(A)). For information, calculated from the sound power level Lw(A).

‡ Evporator 1 and 2 connection diameters for sizes 1402 to 1502.

Eurovent certified data

Notes:

1 Unit sizes 30XA 1402 to 1702 are supplied in two field-assembled modules.

2 Option 119 can be used with options 254 or 255. Contact your Carrier representative for the performances.

Physical data, sizes 252 to 852

30XA		252	302	352	402	452	504	502	602	702	752	802	854	852
Cooling														
Operating weight**														
Standard unit + option 119*	kg	3410	3450	3490	4313	4883	4524	4814	5707	5857	6157	6457	6670	6958
Standard unit + option 254/255*	kg	3830	3860	4380	4830	4900	-	5470	6480	6640	7430	7750	-	7870
Compressors		06T semi-hermetic screw compressors, 50 r/s												
Circuit A + B		1 + 1	1 + 1	1 + 1	1 + 1	1 + 1	1+1	1 + 1	1 + 1	1 + 1	1 + 1	1 + 1	1+1	1 + 1
Circuit C + D	-	-	-	-	-	-	-	-	-	-	-	-	-	-
Refrigerant -Standard unit + option 119***		R-134a												
Circuit A	kg	37	35	35	51	52	53.5	59	58	58	65	69	69	72
Circuit B		39	36	37	37	37	32.5	36	59	62	58	65	65	63
Circuit C+ D	kg	-	-	-	-	-		-	-	-	-	-	-	-
Standard unit + options 254/255*														
Circuit A	kg	60	64	70	85	85	-	102	102	100	129	112	-	130
Circuit B		64	64	56	56	56	-	56	88	95	88	95	-	95
Circuit C+ D	kg	-	-	-	-	-	-	-	-	-	-	-	-	-
Capacity control		Touch Pilot, electronic expansion valve (EXV)												
Minimum capacity	%	15	15	15	15	15	15	15	15	15	15	15	15	15
Condensers		All-aluminium micro-channel heat exchanger												
Fans		Axial Flying Bird 4, rotating shroud												
Standard unit + option 119*														
Quantity		6	6	6	8	8	8	9	11	12	12	12	12	14
Total air flow	l/s	27083	27083	27083	36111	36111	36111	40625	49653	54167	54167	54167	54167	63194
Rotation speed	r/s	15.7	15.7	15.7	15.7	15.7	15.7	15.7	15.7	15.7	15.7	15.7	15.7	15.7
Fans - Standard unit + options 254/255*														
Quantity		6	6	7	8	8	-	9	11	12	13	13	-	14
Total air flow	l/s	20500	20500	20500	27333	27333	-	30750	37583	41000	41000	41000	-	47833
Rotation speed	r/s	11.7	11.7	11.7	11.7	11.7	-	11.7	11.7	11.7	11.7	11.7	-	11.7
Evaporator		Flooded shell-and-tube type												
Water content	l	58	61	61	66	70	77	77	79	94	98	119	119	119
Without hydronic module		Max. water-side pressure 1000 kPa, Victaulic water inlet and outlet connections												
Nominal diameter‡	in	5	5	5	5	5	5	5	5	6	6	6	6	6
Actual outside diameter‡	mm	141.3	141.3	141.3	141.3	141.3	141.3	141.3	141.3	168.3	168.3	168.3	168.3	168.3
With hydronic module (option 116)		Max. water-side pressure 400 kPa, nom. diameter 4", actual outside diameter 114.3 mm, Victaulic water inlet + outlet connections												
Expansion tank volume	l	50	50	50	50	50	-	80	-	-	-	-	-	-
Chassis paint colour Colour		Colour code: RAL7035												

† Eurovent-certified performances in accordance with standard EN14511-3:2013.
Cooling mode conditions: evaporator water entering/leaving temperature 12°C/7°C, outside air temperature 35°C. evaporator fouling factor 0 m2 K/W

†† Gross performances, not in accordance with EN14511-3:2013. These performances do not take into account the correction for the proportional heating capacity and power input generated by the water pump to overcome the internal pressure drop in the heat exchanger. Evaporator water entering/leaving temperature 12°C/7°C, outside air temperature 35°C. evaporator fouling factor 0 m2 K/W

* Options: 119 = High energy efficiency, 257 = low noise level, 279 = compressor enclosure, 258,= very low sound level, 254 = traditional coils (Cu/Al), 255 = traditional coils (Cu/Al) without slots

** Weights are guidelines only. Refer to the unit nameplate.

*** in dB ref=10^{-12} W, (A) weighting. Declared dualnumber noise emission values in accordance with ISO 4871 (with an associated uncertainty of +/-3dB(A)). Measured in accordance with ISO 9614-1 and certified by Eurovent.

**** in dB ref 20µPa, (A) weighting. Declared dualnumber noise emission values in accordance with ISO 4871 (with an associated uncertainty of +/-3dB(A)). For information, calculated from the sound power level Lw(A).

‡ Evporator 1 and 2 connection diameters for sizes 1402 to 1502.

Eurovent certified data

Notes:

1 Unit sizes 30XA 1402 to 1702 are supplied in two field-assembled modules.

2 Option 119 can be used with options 254 or 255. Contact your Carrier representative for the performances.

Physical data, sizes 904 to 1702

EUROVENT CERTIFIED PERFORMANCE
www.eurovent-certification.com

30XA		904	902	1002	1112	1212	1312	1382	1402	1502	1702
Cooling											
Air conditioning application as per EN14511-3:2013† - standard unit and unit with option 279*											
Nominal cooling capacity	kW	-	875	960	1107	1218	1285	1377	1436	1443	1611
ESEER	kW/kW	-	3.81	3.82	3.82	3.99	3.50	3.45	3.95	3.85	3.81
EER	kW/kW	-	2.91	2.95	2.97	3.01	2.81	2.69	2.97	2.87	3.00
Eurovent class cooling		-	B	B	B	B	B	C	B	C	
Air conditioning application††- standard unit											
Nominal cooling capacity	kW	-	878	962	1109	1220	1288	1380	1441	1447	1616
ESEER	kW/kW	-	3.93	3.93	3.89	4.08	3.59	3.53	4.10	4.00	3.97
EER	kW/kW	-	2.94	2.98	2.99	3.03	2.93	2.71	3.00	2.91	3.04
Air conditioning application as per EN14511-3:2013† - unit + option 119											
Nominal cooling capacity	kW	889	886	976	1144	1247	1326	1433	1480	1525	1682
ESEER	kW/kW	3.88	3.82	3.74	4.00	4.10	3.89	3.91	3.98	3.97	3.87
EER	kW/kW	3.10	3.12	3.09	3.27	3.23	3.16	3.06	3.20	3.19	3.22
Eurovent class cooling		A	A	B	A	A	A	B	A	A	A
Air conditioning application††- standard unit + option 119*											
Nominal cooling capacity	kW	892	889	978	1146	1249	1329	1436	1485	1530	1688
ESEER	kW/kW	4.00	3.94	3.85	4.08	4.19	4	4.02	4.13	4.12	4.05
EER	kW/kW	3.14	3.15	3.13	3.3	3.25	3.19	3.09	3.24	3.23	3.27
IPLV - standard unit	kW/kW	-	4.35	4.39	4.28	4.51	3.83	3.87	4.57	4.43	4.33
IPLV - unit with option 119*	kW/kW	4.44	4.32	4.25	4.45	4.59	4.32	4.45	4.52	4.50	4.42
Sound levels - Standard unit											
Sound power level***	dB(A)	-	104	101	103	102	104	104	103	104	103
Sound pressure level at 10 m****	dB(A)	-	71	68	70	69	71	71	69	70	69
Standard unit + option 279*											
Sound power level***	dB(A)	-	97	96	97	96	100	97	97	97	97
Sound pressure level at 10 m****	dB(A)	-	64	63	64	63	67	64	64	64	64
Standard unit + option 257*											
Sound power level***	dB(A)	-	95	94	94	94	99	95	96	96	96
Sound pressure level at 10 m****	dB(A)	-	62	61	61	61	66	62	62	62	62
Standard unit + option 258*w											
Sound power level***	dB(A)	-	93	92	93	93	-	94	93	93	93
Sound pressure level at 10 m****	dB(A)	-	60	59	60	60	-	61	60	60	60
Standard unit + option 119*											
Sound power level***	dB(A)	105	105	103	104	103	105	105	105	105	105
Sound pressure level at 10 m****	dB(A)	72	72	70	71	70	72	72	72	72	71
Standard unit + option 119* + 279*											
Sound power level***	dB(A)	100	100	99	99	99	101	100	101	101	101
Sound pressure level at 10 m****	dB(A)	67	67	66	66	66	68	66	68	68	67
Dimensions - standard unit											
Length	mm	7186	8380	9574	11962	11962	11962	11962	9574/ 4798	9574/ 4798	8380/ 8380
Width	mm	2253	2253	2253	2253	2253	2253	2253	2253	2253	2253
Height	mm	2297	2297	2297	2297	2297	2297	2297	2297	2297	2297
Dimensions - standard unit + options 254/255*											
Length	mm	-	9574	9574	11962	11962	11962	11962	9574/ 4798	9574/ 4798	8380/ 8380
Width	mm	-	2253	2253	2253	2253	2253	2253	2253	2253	2253
Height	mm	-	2297	2297	2297	2297	2297	2297	2297	2297	2297

† Eurovent-certified performances in accordance with standard EN14511-3:2013.
Cooling mode conditions: evaporator water entering/leaving temperature 12°C/7°C, outside air temperature 35°C. evaporator fouling factor 0 m2 K/W

†† Gross performances, not in accordance with EN14511-3:2013. These performances do not take into account the correction for the proportional heating capacity and power input generated by the water pump to overcome the internal pressure drop in the heat exchanger. Evaporator water entering/leaving temperature 12°C/7°C, outside air temperature 35°C. evaporator fouling factor 0 m2 K/W

* Options: 119 = High energy efficiency, 257 = low noise level, 279 = compressor enclosure, 258,= very low sound level, 254 = traditional coils (Cu/Al), 255 = traditional coils (Cu/Al) without slots

** Weights are guidelines only. Refer to the unit nameplate.

*** in dB ref=10^{-12} W, (A) weighting. Declared dualnumber noise emission values in accordance with ISO 4871 (with an associated uncertainty of +/-3dB(A)). Measured in accordance with ISO 9614-1 and certified by Eurovent.

**** in dB ref 20µPa, (A) weighting. Declared dualnumber noise emission values in accordance with ISO 4871 (with an associated uncertainty of +/-3dB(A)). For information, calculated from the sound power level Lw(A).

‡ Evporator 1 and 2 connection diameters for sizes 1402 to 1502.

Eurovent certified data

Notes:
1 Unit sizes 30XA 1402 to 1702 are supplied in two field-assembled modules.
2 Option 119 can be used with options 254 or 255. Contact your Carrier representative for the performances.

Physical data, sizes 904 to 1702

30XA		904	902	1002	1112	1212	1312	1382	1402	1502	1702
Cooling											
Operating weight**											
Standard unit + option 119*	kg	6920	7258	7836	8210	8590	9310	9390	3953/ 7776	3953/ 7926	6958/ 6958
Standard unit + option 254/255*	kg	-	8620	8870	8920	9330	10050	10140	4460/ 8830	4460/ 8950	7880/ 7880
Compressors		06T semi-hermetic screw compressors, 50 r/s									
Circuit A + B		1 + 1	1 + 1	1 + 1	1 + 1	1 + 1	1 + 1	1 + 1	1 + 1	1 + 1	1 + 1
Circuit C + D		-	-	-	-	-	-	-	1 + 0	1 + 0	1 + 1
Refrigerant -Standard unit + option 119***		R-134a									
Circuit A + B	kg	67/67	69/76	75/79	80/116	80/124	110/116	116/124	84/78	85/88	72/63
Circuit C+ D	kg	-	-	-	-	-	-	-	80/-	80/-	72/63
Standard unit + options 254/255*											
Circuit A + B	kg	-	129+103	140/129	-	-	-	-	140/103	140/129	130/95
Circuit C+ D	kg	-	-	-	-	-	-	-	135/-	135/-	130/95
Capacity control		Touch Pilot, electronic expansion valve (EXV), minimum capacity 15%									
Minimum capacity	%	15	15	15	8	8	8	8	10	10	8
Condensers		All-aluminium micro-channel heat exchanger									
Fans		Axial Flying Bird 4, rotating shroud									
Standard unit + option 119*											
Quantity		12	14	16	19	20	20	20	24	24	28
Total air flow	l/s	54167	63194	72222	85764	90278	90278	90278	108333	108333	126389
Rotation speed	r/s	15.7	15.7	15.7	15.7	15.7	15.7	15.7	15.7	15.7	15.7
Fans - Standard unit + options 254/255*											
Quantity		-	15	16	19	20	20	20	24	24	28
Total air flow	l/s	-	47833	54667	64917	68333	68333	68333	82000	82000	95667
Rotation speed	r/s	-	11.7	11.7	11.7	11.7	11.7	11.7	11.7	11.7	11.7
Evaporator		Flooded shell-and-tube type									
Water content	l	130	130	140	164	174	180	180	230	240	240
Without hydronic module		Max. water-side pressure 1000 kPa, Victaulic water inlet and outlet connections									
Nominal diameter‡	in	6	6	8	6	6	6	6	08-juin	08-juin	6
Actual outside diameter‡	mm	168.3	168.3	219.1	168.3	168.3	168.3	168.3	219.1/ 168.3	219.1/ 168.3	168.3
Chassis paint colour Colour		Colour code: RAL7035									

† Eurovent-certified performances in accordance with standard EN14511-3:2013.
Cooling mode conditions: evaporator water entering/leaving temperature 12°C/7°C, outside air temperature 35°C. evaporator fouling factor 0 m2 K/W

†† Gross performances, not in accordance with EN14511-3:2013. These performances do not take into account the correction for the proportional heating capacity and power input generated by the water pump to overcome the internal pressure drop in the heat exchanger. Evaporator water entering/leaving temperature 12°C/7°C, outside air temperature 35°C. evaporator fouling factor 0 m2 K/W

* Options: 119 = High energy efficiency, 257 = low noise level, 279 = compressor enclosure, 258,= very low sound level, 254 = traditional coils (Cu/Al), 255 = traditional coils (Cu/Al) without slots

** Weights are guidelines only. Refer to the unit nameplate.

*** in dB ref=10^{-12} W, (A) weighting. Declared dualnumber noise emission values in accordance with ISO 4871 (with an associated uncertainty of +/-3dB(A)). Measured in accordance with ISO 9614-1 and certified by Eurovent.

**** in dB ref 20µPa, (A) weighting. Declared dualnumber noise emission values in accordance with ISO 4871 (with an associated uncertainty of +/-3dB(A)). For information, calculated from the sound power level Lw(A).

‡ Evporator 1 and 2 connection diameters for sizes 1402 to 1502.

Eurovent certified data

Notes:

1 Unit sizes 30XA 1402 to 1702 are supplied in two field-assembled modules.

2 Option 119 can be used with options 254 or 255. Contact your Carrier representative for the performances.

Electrical data, sizes 252 to 852

Standard unit or with option 81

30XA		252	302	352	402	452	502	602	702	752	802	852
Power circuit												
Nominal power supply	V-ph-Hz	400-3-50 ± 10%										
Control circuit		24 V via internal transformer										
Maximum start-up current*												
Circuit 1**	A	269	269	287	402	505	505	574	606	773	803	805
Circuit 2**	A	-	-	-	-	-	-	-	-	-	-	-
Option 81	A	-	-	-	-	-	-	-	-	-	-	-
Nominal start-up current***												
Circuit 1**	A	245	245	262	378	480	480	536	562	735	759	761
Circuit 2**	A	-	-	-	-	-	-	-	-	-	-	-
Option 81	A	-	-	-	-	-	-	-	-	-	-	-
Cosine Phi (maximum)****		0.88	0.88	0.88	0.88	0.88	0.88	0.88	0.88	0.86	0.86	0.87
Cosine Phi (nominal)†		0.85	0.85	0.84	0.84	0.85	0.85	0.85	0.85	0.83	0.84	0.84
Maximum power input‡												
Circuit 1**	kW	121	131	141	165	185	204	247	267	293	312	343
Circuit 2**	kW	-	-	-	-	-	-	-	-	-	-	-
Option 81	kW	-	-	-	-	-	-	-	-	-	-	-
Nominal unit current draw†												
Circuit 1**	A	151	167	184	210	242	268	325	352	408	433	453
Circuit 2**	A	-	-	-	-	-	-	-	-	-	-	-
Option 81	A	-	-	-	-	-	-	-	-	-	-	-
Maximum unit current draw (Un)‡												
Circuit 1**	A	198	215	233	270	303	335	404	436	492	522	572
Circuit 2**	A	-	-	-	-	-	-	-	-	-	-	-
Option 81	A	-	-	-	-	-	-	-	-	-	-	-
Option 231		182	196	211	242	272	305	364	397	448	479	531
Maximum unit current draw (Un – 10%)****												
Circuit 1**	A	208	232	251	290	326	360	435	469	529	561	615
Circuit 2**	A	-	-	-	-	-	-	-	-	-	-	-
Option 81	A	-	-	-	-	-	-	-	-	-	-	-

* Instantaneous start-up current (operating current of the smallest compressor + fan current + locked rotor current in star connection of the largest compressor). Values obtained at operation with maximum unit power input.
** 30XA 1402 to 1702 units: circuit 1 supplies circuits A and B, circuit 2 supplies circuits C and D. 30XA 1112, 1212, 1312 and 1382 units: circuit 1 supplies circuit A, circuit 2 supplies circuit B.
*** Instantaneous start-up current (operating current of the smallest compressor + fan current + locked rotor current in star connection of the largest compressor). Values obtained at standard Eurovent unit operating conditions: air 35 °C, water 12/7 °C.
**** Values obtained at operation with maximum unit power input.
† Values obtained at standard Eurovent unit operating conditions: air 35 °C, water 12/7 °C
‡ Values obtained at operation with maximum unit power input. Values given on the unit name plate

Notes:
1. Unit sizes 30XA 1112, 1212, 1312, 1382, 1402 to 1702 have two power connection points.

Unit with option 119 or with option 119 and option 81

30XA		252	302	352	402	452	504	502	602	702	752	802	854	852
Power circuit														
Nominal power supply	V-ph-Hz	400-3-50 ± 10%												
Control circuit		24 V via internal transformer												
Maximum start-up current*														
Circuit 1**	A	274	274	292	407	510	510	510	583	616	782	812	812	815
Circuit 2**	A	-	-	-	-	-	-	-	-	-	-	-	-	-
Option 81	A	-	-	-	-	-	-	-	-	-	-	-	-	-
Nominal start-up current***														
Circuit 1**	A	246	246	261	379	479	479	479	535	561	734	757	760	760
Circuit 2**	A	-	-	-	-	-	-	-	-	-	-	-	-	-
Option 81	A	-	-	-	-	-	-	-	-	-	-	-	-	-
Cosine Phi (maximum)****		0.88	0.87	0.87	0.88	0.88	0.88	0.88	0.88	0.88	0.86	0.86	0.86	0.86
Cosine Phi (nominal)†		0.84	0.84	0.83	0.83	0.84	0.84	0.84	0.84	0.84	0.83	0.83	0.83	0.83
Maximum power input‡														
Circuit 1**	kW	126	136	147	172	192	211	212	257	278	304	323	353	356
Circuit 2**	kW	-	-	-	-	-	-	-	-	-	-	-	-	-
Option 81	kW	-	-	-	-	-	-	-	-	-	-	-	-	-
Nominal unit current draw†														
Circuit 1**	A	151	167	182	210	239	267	267	324	349	409	430	446	446
Circuit 2**	A	-	-	-	-	-	-	-	-	-	-	-	-	-
Option 81	A	-	-	-	-	-	-	-	-	-	-	-	-	-
Maximum unit current draw (Un)‡														
Circuit 1**	A	208	226	243	284	316	347	350	423	457	512	542	590	596
Circuit 2**	A	-	-	-	-	-	-	-	-	-	-	-	-	-
Option 81	A	-	-	-	-	-	-	-	-	-	-	-	-	-
Option 231		192	207	221	256	285	317	320	383	418	468	499	549	555
Maximum unit current draw (Un – 10%)****														
Circuit 1**	A	219	243	262	305	340	373	376	455	491	551	583	634	640
Circuit 2**	A	-	-	-	-	-	-	-	-	-	-	-	-	-
Option 81	A	-	-	-	-	-	-	-	-	-	-	-	-	-

* Instantaneous start-up current (operating current of the smallest compressor + fan current + locked rotor current in star connection of the largest compressor). Values obtained at operation with maximum unit power input.

** 30XA 1402 to 1702 units: circuit 1 supplies circuits A and B, circuit 2 supplies circuits C and D. 30XA 1112, 1212, 1312 and 1382 units: circuit 1 supplies circuit A, circuit 2 supplies circuit B.

*** Instantaneous start-up current (operating current of the smallest compressor + fan current + locked rotor current in star connection of the largest compressor). Values obtained at standard Eurovent unit operating conditions: air 35 °C, water 12/7 °C.

**** Values obtained at operation with maximum unit power input.

† Values obtained at standard Eurovent unit operating conditions: air 35 °C, water 12/7 °C

‡ Values obtained at operation with maximum unit power input. Values given on the unit name plate

Notes:

1. Unit sizes 30XA 1112, 1212, 1312, 1382, 1402 to 1702 have two power connection points.

Electrical data, sizes 904 to 1702

Standard unit or with option 81

30XA		902	1002	1112	1212	1312	1382	1402	1502	1702
Power circuit										
Nominal power supply	V-ph-Hz	400-3-50 ± 10%								
Control circuit		24 V via internal transformer								
Maximum start-up current**										
Circuit 1**	A	893	941	587	587	772	772	893	941	805
Circuit 2**	A	-	-	772	772	772	772	587	587	805
Option 81	A	-	-	1085	1131	1198	1228	1248	1294	-
Nominal start-up current***										
Circuit 1**	A	845	865	587	587	772	772	845	865	761
Circuit 2**	A	-	-	772	772	772	772	587	587	761
Option 81	A	-	-	1023	1039	1103	1118	1125	1143	-
Cosine Phi (maximum)****		0.86	0.87	0.86	0.87	0.87	0.87	0.86	0.87	0.87
Cosine Phi (nominal)†		0.85	0.85	0.85	0.86	0.87	0.87	0.86	0.85	0.85
Maximum power input‡										
Circuit 1**	kW	359	420	182	211	258	278	390	420	343
Circuit 2**	kW	-	-	279	302	278	299	210	210	343
Option 81	kW	-	-	400	512	531	571	600	630	-
Nominal unit current draw†										
Circuit 1**	A	508	548	258	274	340	356	530	556	452
Circuit 2**	A	-	-	358	392	356	387	278	278	452
Option 81	A	-	-	616	666	696	743	808	834	-
Maximum unit current draw (Un)‡										
Circuit 1**	A	611	707	313	359	426	456	661	707	572
Circuit 2**	A	-	-	459	496	456	491	354	354	572
Option 81	A	-	-	771	855	882	947	1015	1061	-
Option 231		855	662	-	-	-	-	-	-	-
Maximum unit current draw (Un – 10%)****										
Circuit 1**	A	657	760	332	381	462	494	711	760	615
Circuit 2**	A	-	-	497	527	494	522	380	380	615
Option 81	A	-	-	828	908	956	1016	1091	1141	-

* Instantaneous start-up current (operating current of the smallest compressor + fan current + locked rotor current in star connection of the largest compressor). Values obtained at operation with maximum unit power input.
** 30XA 1402 to 1702 units: circuit 1 supplies circuits A and B, circuit 2 supplies circuits C and D. 30XA 1112, 1212, 1312 and 1382 units: circuit 1 supplies circuit A, circuit 2 supplies circuit B.
*** Instantaneous start-up current (operating current of the smallest compressor + fan current + locked rotor current in star connection of the largest compressor). Values obtained at standard Eurovent unit operating conditions: air 35 °C, water 12/7 °C
**** Values obtained at operation with maximum unit power input.
† Values obtained at standard Eurovent unit operating conditions: air 35 °C, water 12/7 °C
‡ Values obtained at operation with maximum unit power input. Values given on the unit name plate

Notes:
1. Unit sizes 30XA 1112, 1212, 1312, 1382, 1402 to 1702 have two power connection points.

Unit with option 119 or with option 119 and option 81

30XA		902	1002	1112	1212	1312	1382	1402	1502	1702	1702
Power circuit											
Nominal power supply	V-ph-Hz	400-3-50 ± 10%									
Control circuit		24 V via internal transformer									
Maximum start-up current*											
Circuit 1**	A	902	905	954	587	587	772	772	905	954	815
Circuit 2**	A	-	-	-	772	772	772	772	587	587	815
Option 81	A	-	-	-	1093	1139	1208	1238	1275	1321	-
Nominal start-up current***											
Circuit 1**	A	843	845	860	587	587	772	772	845	860	760
Circuit 2**	A	-	-	-	772	772	772	772	587	587	760
Option 81	A	-	-	-	1031	1047	1113	1128	1122	1133	-
Cosine Phi (maximum)****		0.85	0.85	0.86	0.86	0.87	0.87	0.87	0.86	0.86	0.86
Cosine Phi (nominal)†		0.84	0.84	0.84	0.84	0.84	0.85	0.86	0.84	0.84	0.84
Maximum power input‡											
Circuit 1**	kW	369	372	435	186	216	262	284	405	435	356
Circuit 2**	kW	-	-	-	286	309	284	305	217	217	356
Option 81	kW	-	-	-	471	525	544	584	622	652	-
Nominal unit current draw†											
Circuit 1**	A	511	511	541	259	275	341	356	527	546	446
Circuit 2**	A	-	-	-	360	393	356	386	273	273	446
Option 81	A	-	-	-	619	668	697	742	800	820	-
Maximum unit current draw (Un)‡											
Circuit 1**	A	629	635	734	321	367	436	466	688	734	596
Circuit 2**	A	-	-	-	470	508	466	501	367	367	596
Option 81	A	-	-	-	790	875	902	967	1056	1102	-
Option 231		582	588	689	-	-	-	-	-	-	-
Maximum unit current draw (Un – 10%)****											
Circuit 1**	A	677	683	790	340	389	472	504	740	790	640
Circuit 2**	A	-	-	-	508	539	504	532	395	395	640
Option 81	A	-	-	-	847	928	976	1036	1135	1185	-

* Instantaneous start-up current (operating current of the smallest compressor + fan current + locked rotor current in star connection of the largest compressor). Values obtained at operation with maximum unit power input.
** 30XA 1402 to 1702 units: circuit 1 supplies circuits A and B, circuit 2 supplies circuits C and D. 30XA 1112, 1212, 1312 and 1382 units: circuit 1 supplies circuit A, circuit 2 supplies circuit B.
*** Instantaneous start-up current (operating current of the smallest compressor + fan current + locked rotor current in star connection of the largest compressor). Values obtained at standard Eurovent unit operating conditions: air 35 °C, water 12/7 °C
**** Values obtained at operation with maximum unit power input.
† Values obtained at standard Eurovent unit operating conditions: air 35 °C, water 12/7 °C
‡ Values obtained at operation with maximum unit power input. Values given on the unit name plate

Notes:
1. Unit sizes 30XA 1112, 1212, 1312, 1382, 1402 to 1702 have two power connection points.

Options

Options	No.	Description	Advantages	Use for 30XA range
Corrosion protection, traditional coils	2B	Factory application of Blygold Polual treatment on the copper/aluminium coils	Improved corrosion resistance, recommended for industrial, rural and marine environments	252-1702*
Corrosion protection, traditional coils	3A	Fins made of pre-treated aluminium (polyurethane and epoxy)	Improved corrosion resistance, recommended for moderate marine and urban environments	252-1702*
Medium-temperature brine solution	5	Implementation of new algorithms of control and evaporator redesign to allow chilled brine solution production down to -6 °C when ethylene glycol is used (-3 °C with propylene glycol)	Covers specific applications such as ice storage and industrial processes	252-1702*
Low-temperature brine solution	6	Implementation of new algorithms of control and evaporator redesign to allow chilled brine solution production down to -12 °C when ethylene glycol is used (-8 °C with propylene glycol)	Covers specific applications such as ice storage and industrial processes	252-1702*
Unit equipped for air discharge ducting	10	Fans equipped with discharge connection flanges - maximum available pressure 60 kPa	Facilitates connections to the discharge ducts	252-1702*
IP54 control box	20A	Increased leak tightness of control boxes	Protects the inside of the electrical box from dusts and sand. In general this option is recommended for installations in polluted environments	252-1702
Tropicalisation of the electrical box	22	Electrical box equipped with an electrical heater and a fan. Electrical connections on the compressors painted with a special varnish and covered with an anti-condensation foam.	Grant safe operation in typical "tropical" climate. This option is recommended for all applications where humidy inside the electrical box can reach 80% at 40 °C and unit can remain in stand-by for a long time under this conditions.	252-1702
Grilles and enclosure panels	23	Metal grilles on the 4 unit sides, plus side enclosure panels at each end of the coil	Improves aesthetics, protection against intrusion to the unit interior, coil and piping protection against impacts.	252-1702
Enclosure panels	23A	Side enclosure panels at each end of the coil	Improves aesthetics, coil and piping protection against impacts.	252-1702
Winter operation down to -20 °C	28	Fan speed control via frequency converter	Stable unit operation for air temperature down to -20 °C	252-1702
Evaporator frost protection	41A	Electric resistance heater on the evaporator and discharge valve	Evaporator frost protection down to -20 °C outside temperature	252-1702
Evap.and hydraulic mod. frost protection	41B	Electric resistance heater on evaporator, discharge valve and hydronic module	Evaporator and hydronic module frost protection down to -20 °C outside temperature	252-1702
Total heat recovery	50	Unit equipped with additional heat exchanger in parallel with the condenser coils.	Production of free hot-water simultaneously with chilled water production	252-1702*
Master/slave operation	58	Unit equipped with supplementary water outlet temperature sensor kit to be field-installed allowing master/slave operation of two units connected in parallel	Optimised operation of two chillers connected in parallel with operating time equalisation	252-1702
Single power connection point	81	Unit power connection via one main supply connection	Quick and easy installation	1112-1502
Service valve set	92	Liquid line valve (evaporator inlet), compressor suction and discharge line valves and economiser line valve	Allow isolation of various refrigerant circuit components for simplified service and maintenance	252-1702
Compressor discharge valves	93A	Shut-off valve on the compressor discharge piping	Simplified maintenance	252-1702
Evaporator with one pass more	100A	Evaporator with one pass more on the water side	Optimise chiller operation when the chilled water circuit is designed with low waterflows (high delta T evaporator inlet/oulet)	252-1702
Evaporator with one pass less	100C	Evaporator with one pass on the water side. Evaporator inlet and outlet on opposite sides.	Easy to install, depending on site. Reduced pressure drops	252-1002
21 bar evaporator	104	Reinforced evaporator for extension of the maximum water-side service pressure to 21 bar (standard 10 bar)	Covers applications with a high water column evaporator side (typically high buildings)	252-1702
Reversed evaporator water connections	107	Evaporator with reversed water inlet/outlet	Easy installation on sites with specific requirements	252-1702
HP single-pump hydronic module	116B	Complete hydronic module equipped with water filter, expansion tank with relief valve, one high pressure pump, drain valve and water flow control valve. For more details, refer to the dedicated chapter	Plug & play approach	252-1702**
HP dual-pump hydronic module	116C	Complete hydronic module equipped with water filter, expansion tank with relief valve, two high pressure pumps, drain valve and water flow control valve. For more details, refer to the dedicated chapter	Plug & play approach. Increased system reliability	252-1702**
LP single-pump hydronic module	116F	Complete hydronic module equipped with water filter, expansion tank with relief valve, one low pressure pump, drain valve and water flow control valve. For more details, refer to the dedicated chapter	Plug & play approach	252-1702**
LP dual-pump hydronic module	116G	Complete hydronic module equipped with water filter, expansion tank with relief valve, two low pressure pumps, drain valve and water flow control valve. For more details, refer to the dedicated chapter	Plug & play approach. Increased system reliability	252-1702**

* Not available for the sizes 504, 854, 904.
** Not available for the size 504.

Options	No.	Description	Advantages	Use for 30XA range
Dx Free Cooling system on two circuits	118A	Patented Carrier free-cooling system with cooling micro-pump on both refrigerant circuits. Operation without glycol, no extra free-cooling coil. See Dx Free-cooling option chapter	Energy savings for applications with cooling demand throughout the entire year	252-1002*
High energy efficiency	119	Higher air flow through the condenser coils improving heat exchange efficiency on the condenser	Energy cost reduction and extended operating envelope (full load operation at higher air temperature)	252-1702*
CCN to J-Bus gateway	148B	Two-directional communication board complying with JBus protocol	Connects the unit by communication bus to a building management system	252-1702
CCN to Lon gateway	148D	Two-directional communication board complying with Lon Talk protocol	Connects the unit by communication bus to a building management system	252-1702
Bacnet over IP gateway	149	Two-directional high-speed communication using BACnet protocol over Ethernet network (IP)	Easy and high-speed connection by ethernet line to a building management system. Allows access to multiple unit parameters	252-1702
Energy Management Module	156	Control board with additional inputs/outputs. See Energy Management Module option chapter	Extended remote control capabilities (Set-point reset, ice storage end, demand limits, boiler on/off command...)	252-1702
Touch Pilot control, 7" user interface	158A	Touch Pilot control supplied with a 7 inch colour touch screen user interface	Enhanced ease of use	252-1702
Leak detection	159	0-10 V signal to report any refrigerant leakage in the unit directly on the controlller (the leak detector itself must be supplied by the customer)	Immediate customer notification of refrigerant losses to the atmosphere, allowing timely corrective actions	252-1702
Dual relief valves installed w/ 3-way valve	194	Three-way valve upstream of the relief valve on the evaporator and the oil separator	Valve replacement and inspection facilitated without refrigerant loss. Comforms to European standard EN378/BGVD4	252-1382
Compliance with Swiss regulations	197	Additional tests on the water heat exchangers: supply (additional of PED documents) supplementary certificates and test certifications	Conformance with Swiss regulations	252-1702
Compliance with Russian regulations	199	GOST certification	Conformance with Russian regulations	252-1702
Compliance with Australian regulations	200	Unit approved to Australian code	Conformance with Australian regulations	252-1702
Power factor correction	231	Capacitors for automatic regulation of power factor (cos phi) value to 0,95.	Reduction of the real electrical power, compliance with minimum power factor limit set by utilities	252-1002
Traditional coils (Cu/Al)	254	Coils made of copper tubes with aluminium fins	None	252-1702*
Traditional coils (Cu/Al) without slots	255	Coils made of copper tubes with aluminium fins without slots	None	252-1702*
Insulation of the evap. in/ out ref.lines	256	Thermal insulation of the evaporator entering/ leaving refrigerant lines with flexible, anti-UV insulant	Prevents condensation on the evaporator entering/leaving refrigerant lines	252-1702
Low noise level	257	Sound insulation of main noise sources (includes option 279)	5 to 12 dB(A) quiter than standard unit (depending model and size). Refer to the physical data table for detailed values	252-1702
Very low sound level	258	Enhanced sound insulation of main noise sources combined with fans speed management (includes option 279)	2 to 3 dB(A) quiter than unit with option 257. Refer to the physical data table for detailed values	452-1702*
Enviro-Shield anti-corrosion protection	262	Coating by conversion process which modifies the surface of the aluminum producing a coating that is integral to the coil. Complete immersion in a bath to ensure 100% coverage. No heat transfer variation, tested 4000 hours salt spray per ASTM B117	Improved corrosion resistance, recommended for use in moderately corrosive environments	252-1702
Super Enviro-Shield anti-corrosion protection	263	Extremely durable and flexible epoxy polymer coating applied on micro channel heat exchangers by electro coating process, final UV protective topcoat. Minimal heat transfer variation, tested 6000 hours constant neutral salt spray per ASTM B117, superior impact resistance per ASTM D2794	Improved corrosion resistance, recommended for use in extremely corrosive environments	252-1702
Welded evaporator water connection kit	266	Victaulic piping connections with welded joints	Easy installation	252-1702
Compressor enclousure	279	Compressor sound enclosure	4 to 10 dB(A) quiter than standard unit. Refer to the physical data table for detailed values	252-1702
Evaporator with aluminium jacket	281	Evaporator covered with an aluminium sheet for thermal insulation protection	Improved resistance to aggressive climate conditions	252-1702
230V electrical plug	284	230V AC power supply source provided with plug socket and transformer (180 VA, 0,8 Amps)	Permits connection of a laptop or an electrical device during unit commissioning or servicing	252-1702
Carrier Connect link (BSS regions only)	298	3G Router board NOTE 1: Require option 149 NOTE 2: When more than one machine is installed on site, only one of them shall be equipped with option 298 while all of them must be equipped with option 149 NOTE 3: If the Carrier® PlantCTRL™ is on site, option 298 shall be integrated in the Carrier® PlantCTRL™ while option 149 is still mandatory for each single unit.	Enabler for Carrier connect service offer	252-1702

* Not available for the sizes 504, 854, 904.

Remote Management (EMM option)

- The Energy Management Module (EMM) offers extended remote control possibilities:
  - Room temperature: Permits set-point reset based on the building indoor air temperature (if Carrier thermostat are installed)
  - Set-point reset: Ensures reset of the cooling set-point based on a 4-20 mA or 0-10 V signal
  - Demand limit: Permits limitation of the maximum chiller capacity based on 0-10 V signal
  - Demand limit 1 and 2: Closing of these contacts limits the maximum chiller capacity to two predefined values
  - User safety: This contact can be used for any customer safety loop; opening the contact generates a specific alarm
  - Ice storage end: When ice storage has finished, this input permits return to the second set-point (unoccupied mode)
  - Time schedule override: Closing of this contact cancels the time schedule effects
  - Out of service: This signal indicates that the chiller is completelt out of service
  - Chiller capacity: This analogue output (0-10 V) gives an immediate indication of the chiller capacity
  - Alert indication: This volt-free contact indicates the necessity to carry out a maintenance operation or the presence of a minor fault
  - Compressors running status: Set of outputs (as many as the compressors number) indicating which compressors are running.

Total heat reclaim (option 50)

Suitable for heating, domestic hot water preparation, agriculture and food industry, industrial processes and other hot-water requirements.

With the total heat reclaim option it is possible to reduce the energy consumption bill considerably compared to conventional heating equipment such as fossil fuel boilers or electric water tanks.

Operating principle

If hot water production is required, the compressor discharge gases are directed towards the heat reclaim condenser. The refrigerant releases its heat to the hot water that leaves the condenser at a temperature of up to 60 °C. In this way 100% of the heat rejected by the liquid chiller can be used to produce hot water. When the demand for heat is satisfied, the hot gas is again directed towards the air condenser where the heat is rejected to the outside air by the fans. Hot water temperature control is ensured by the chiller Touch Pilot control that independently controls the reclaim operation of each refrigerant circuit.

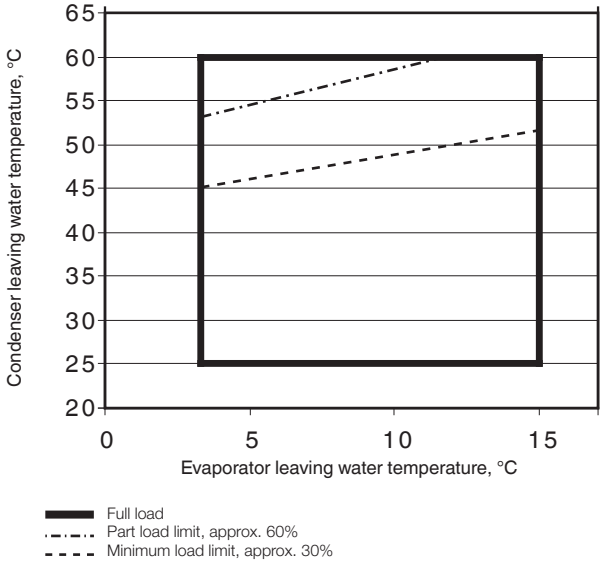

Note: Heat reclaim is only possible, if the unit produces cold water at the same time.

Condenser water temperature (°C)	Min	Max
Entering temperature at start-up	12.5*	55
Entering temperature during operation	20	55
Leaving temperature during operation	25	60
Evaporator water temperature (°C)		
Entering temperature at start-up	-	45
Entering temperature during operation	6.8	21

* The entering water temperature at start-up must not fall below 12.5 °C. For installations with a lower temperature a three-way valve must be used.

Note: If the evaporator leaving water temperature is below 4 °C, a glycol-water solution or the frost protection option must be used.

In part-load operation, the limitation of the condenser leaving water temperature is due to the operating range of the screw compressor. If the condenser leaving water temperature is above the limit value given in the curves on the right, the unit will automatically change over to the mode without heat recovery:

Part load operating limits (evaporator leaving water temperature = 7 °C)

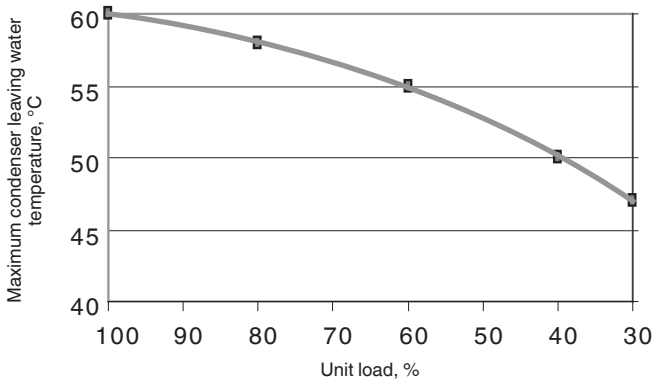

Physical data (option 50)

These are the same as for the standard unit except:

30XA heat reclaim mode		252	302	352	402	452	502	602	702	752	802	852	902	1002
Cooling capacity*	kW	265	295	317	385	444	500	616	679	721	789	830	891	990
Heating capacity in heat reclaim mode	kW	340	377	406	487	562	628	773	845	909	988	1042	1121	1246
Total power input (unit)*	kW	81.9	89.6	98.0	112.7	128.7	140.4	171.7	182.9	205.6	218.5	232.8	252.1	281.6
Total energy efficiency ratio (EER)	kW/kW	3.23	3.29	3.23	3.41	3.45	3.56	3.59	3.71	3.51	3.61	3.57	3.53	3.51
Total coefficient of performance (COP)	kW/kW	4.15	4.20	4.14	4.33	4.36	4.49	4.51	4.63	4.43	4.53	4.49	4.46	4.44
Operating weight**	kg	3920	3960	3970	4930	5050	5550	6670	6730	7130	7350	7890	8340	8950
Condenser diameter	in	10	10	10	12	14	14	12+12	12+12	14+12	14+12	14+12	14+14	14+14
Refrigerant charge														
Circuit A	kg	37	35	35	51	52	59	58	58	65	69	72	69	91
Circuit B	kg	39	37	37	37	37	36	59	62	58	65	63	76	89
Heat reclaim condenser		Flooded shell-and-tube condenser												
Water volume	l	38	38	38	55	68	68	55 + 55	55 + 55	68 + 55	68 + 55	68 + 55	68 + 68	68 + 68
Water connection		Victaulic												
Nominal diameter	in	3	3	3	4	4	4	4	4	4	4	4	4	4
Actual outside diameter	mm	88.9	88.9	88.9	114.3	114.3	114.3	114.3	114.3	114.3	114.3	114.3	114.3	114.3

* Nominal conditions: Entering/leaving water temperature: evaporator 12 °C/ 7 °C; heat reclaim condenser: 40 °C/45 °C; evaporator and heat reclaim condenser fouling factor = 0 m^2 K/kW.
Gross performances, not in accordance with EN14511-3:2011. These performances do not take into account the correction for the proportional heating capacity and power input generated by the water pump to overcome the internal pressure drop in the heat exchanger.

** Weights are for guidance only

DX free cooling system (option 118A)

The DX free cooling option permits significant energy savings for all applications that require cooling in winter. In the free cooling mode the compressors are stopped and only the fan and cooling micro-pump are running. The changeover from compressor cooling mode to free cooling mode is automatically controlled by the Touch Pilot control, based on the chiller heat load and the temperature difference between chilled water and ambient air.

Important: In order to optimise chiller performances, it is recommended to use the leaving water set point reset function.

Operating principle

When the chilled water-air temperature difference exceeds a threshold value, the Touch Pilot control carries out a comparison between the instantaneous chiller cooling capacity and the available free cooling capacity. If the operating conditions allow free cooling operation, the compressors are stopped, a set of valves on the suction piping connects the evaporator with the condenser, allowing the migration of the refrigerant vapours to the condenser. The refrigerant condenses in the condenser coils, and the cooling micro-pump transports the liquid to the evaporator. The cooling capacity in free cooling mode is controlled by the opening of the electronic expansion valve (EXV).

Operation in combined FC (free-cooling) and MC (mechanical cooling) mode is possible in the two independent refrigerant circuits. This can optimise the free-cooling operations and at the same time ensures that the cooling requirements of the system are met.

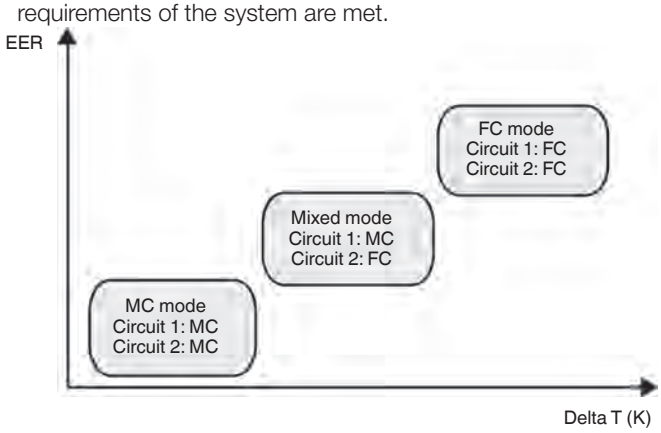

Legend
MC Mechanical cooling (compressors)
FC Free cooling
Delta T Difference between the leaving water temperature and the entering air temperature, K

Advantages of the DX free cooling system

- Operation without glycol

Unlike traditional hydronic free-cooling systems that require the use of a glycol solution, the AquaForce DX free cooling chiller works with pure water. The evaporator is protected against frost down to -20 °C by an electric resistance heater (option).

- Low water pressure losses

The AquaForce DX free cooling chiller does not include a three-way valve nor free cooling coils connected in series with the evaporator. The AquaForce free cooling chiller has the same water pressure losses as a standard chiller.

- Weight and dimensions gain
  - The DX free cooling option has practically no impact on the weight of the liquid chiller.
  - The AquaForce free cooling chiller has the same dimen-sions as a standard chiller.
- Increased energy efficiency
  - In free cooling mode only the fans and the cooling micro-pump run. At an air-water temperature difference of 10 K for example the average chiller energy efficiency (EER) is 23 (kW/kW).
  - In the mechanical cooling mode chiller thermal and energy performances are not reduced by the use of a water-glycol solution.
  - As the pressure losses of the water circuit are low, the water pumps use less energy.

Cooling capacities

30XA 252-1002 in free-cooling mode (option 118A)

		Condenser entering air temperature, °C					
30XA	LWT	0		-5		-10	
	°C	Qc kW	EER kW/kW	Qc kW	EER kW/kW	Qc kW	EER kW/kW
252	10	143.4	21.9	183.2	27.7	186.4	28.0
302		143.0	22.3	182.7	28.3	185.9	28.5
352		142.9	22.0	182.6	27.9	185.8	28.1
402		182.8	20.2	255.1	27.9	274.8	29.8
452		182.6	20.0	255.0	27.7	274.6	29.6
502		202.5	19.9	284.2	27.7	306.9	29.6
602		253.1	19.7	373.1	28.7	415.5	31.7
702		276.6	20.2	407.5	29.5	453.8	32.6
752		271.5	19.9	400.1	29.1	445.6	32.2
802		274.9	19.7	405.0	28.8	451.1	31.8
852		323.6	19.9	476.8	29.1	531.0	32.2
902		328.1	20.4	483.4	29.8	538.4	32.9
1002		368.1	20.6	542.3	30.2	603.9	33.3

Note: Calculations according to the standard performances (in accordance with EN14511-3:2011) and Eurovent-certified. Evaporator fouling factor 0 m2 K/W.

Legend
LWT Leaving water temperature, °C
Qc Cooling capacity, kW
EER Energy efficiency ratio, kW/kW

Operating limits

	Free-cooling mode	Mechanical cooling mode (compressors)
Evaporator water temperature, °C		
Minimum leaving water temperature	3.3	3.3
Maximum leaving water temperature	25	15
Condenser air temperature, °C		
Minimum leaving air temperature	-20	-20*
Maximum leaving air temperature	20	55

* For operation at an air temperature below -10 °C option 28 (winter operation) is required.

Fan with available pressure (option 10)

This option allows a duct connection at the discharge side of the condenser fan. The unit is supplied with axial fans with a speed of 15.8 r/s (same for option 119), each equipped with a duct connection frame. The chiller can operate at a static discharge pressure of up to 60 Pa with reduced performance. The performances can be estimated using the coefficients below, applicable at the conditions shown in the curve below.

■ Selection method

The base performances for the calculation are those of option 119 (only MCHE heat exchangers, see pages 24 and 25 of this manual). To obtain the capacities at the static duct pressure, apply the coefficients shown in the tables on the right.

30XA option 10

		Correction factors			
Fan pressure drop	Pa	0	20	40	60
Air flow	%	0	-3.5	-7.5	-12.1
Cooling capacity	%	0	-0.5	-1.0	-1.5
EER	%	0	-1.5	-3.5	-5.0
Power input	%	0	+1.0	+2.5	+3.5

Note: All fans must be individually ducted.

■ Example

30XA 802 with 40 Pa pressure drop

Performances option 119 at the following conditions:

- 35 °C outside air temperature
- 12/7 °C entering/leaving water temperature

		0 Pa for option 119	Correction factors	40 Pa
Air flow	l/s	54167	-7.5%	50119
Cooling capacity	kW	787	-1.0%	779
EER	kW/kW	3.13	-3.5%	3
Power input	kW	251	+2.5%	258

Application limits for correction factors for high air temperatures

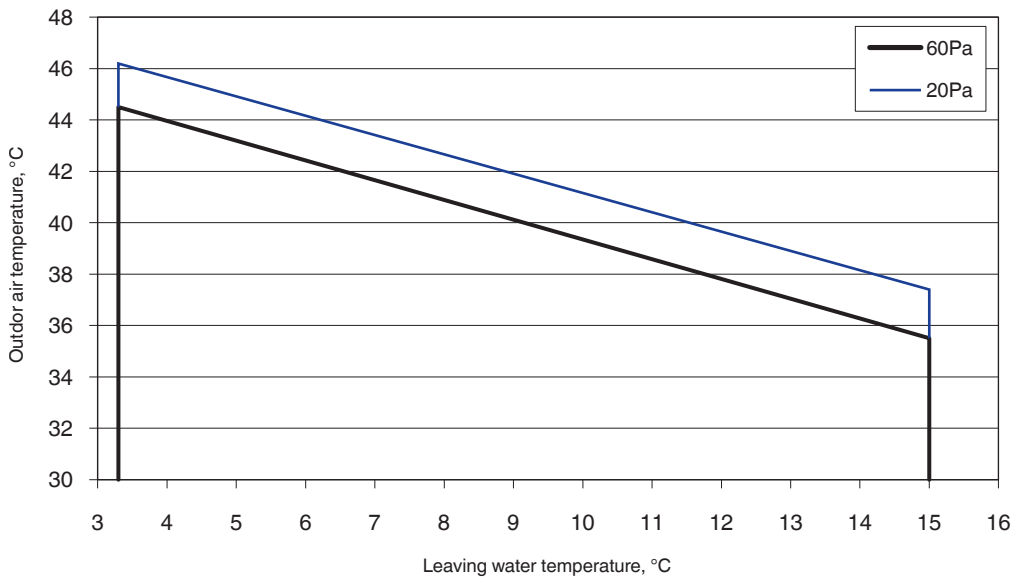

Features and advantages

Very economical operation

- Exceptionally high full load and part load energy efficiency:
  - Eurovent energy efficiency class A and B (unit with high-efficiency option 119).
  - Standardised Eurovent values in accordance with EN 14511-3:2013: EER up to 3.3 and ESEER up to 4.2.
  - New twin-rotor screw compressor equipped with a high-efficiency motor and a variable capacity valve that permits exact matching of the cooling capacity to the load.
  - All aluminium condenser with high-efficiency micro-channels.
  - Flooded shell-and-tube evaporator to increase the heat exchange efficiency.
  - Electronic expansion device permitting operation at a lower condensing pressure and improved utilisation of the evaporator heat exchange surface (superheat control).
  - Economiser system with electronic expansion device for increased cooling capacity.

Low operating sound levels

- Compressors
  - Discharge dampers integrated in the oil separator (Carrier patent).
  - Silencer on the economiser return line.
  - Acoustic compressor and oil separator enclosure reducing radiated noise (option).
- Condenser section
  - Condenser coils in V-shape with an open angle, allowing quieter air flow across the coil
  - Low-noise 4th generation Flying Bird fans, made of a composite material (Carrier patent) are now even quieter and do not generate intrusive low-frequency noise
  - Rigid fan mounting preventing start-up noise (Carrier patent).

Easy and fast installation

- Integrated hydronic module (option)
  - Centrifugal low or high-pressure water pump (as required), based on the pressure loss of the hydronic installation
  - Single or dual pump (as required) with operating time balancing and automatic changeover to the back-up pump if a fault develops
  - Water filter protecting the water pump against circulating debris
  - High-capacity membrane expansion tank ensures pressurisation of the water circuit
  - Thermal insulation and aluminium protection (option)
  - Pressure sensor to check filter pollution and for direct numerical display of the water flow rate with an estimate of the instantaneous cooling capacity at the control interface
  - Water flow control valve.
- Simplified electrical connections
  - Main disconnect switch with high trip capacity
  - Transformer to supply the integrated control circuit (400/24 V).
- Fast commissioning
  - Systematic factory operation test before shipment
  - Quick-test function for step-by-step verification of the instruments, expansion devices, fans and compressors.

Environmentally balanced

- R-134a refrigerant
  - Refrigerant of the HFC group with zero ozone depletion potential
  - 30% reduction in the refrigerant charge through the use of micro-channel heat exchangers
- Leak-tight refrigerant circuit
  - Reduction of leaks as no capillary tubes and flare connec-tions are used
  - Verification of pressure transducers and temperature sensors without transferring refrigerant charge
  - Liquid line service valve for simplified maintenance (option).

Absolute reliability

- Screw compressors
  - Industrial-type screw compressors with oversized bearings and motor cooled by suction gas.
  - All compressor components are easily accessible on site minimising down-time.
  - Protection increased by an electronic board.
- Air condenser
  - All aluminium micro-channel heat exchanger (MCHE) with high corrosion resistance. The all aluminium design eliminates the formation of galvanic currents between aluminium and copper that cause coil corrosion in saline or corrosive environments.
- Evaporator
  - Thermal insulation with aluminium sheet finish (option) for perfect resistance to external aggression (mechanical and UV protection).
- Auto-adaptive control
  - Control algorithm prevents excessive compressor cycling (Carrier patent)
  - Automatic compressor unloading in case of abnormally high condensing pressure. If condenser coil fouling or fan failure occurs, the AquaForce continues to operate, but at reduced capacity
- Exceptional endurance tests
  - Partnerships with specialised laboratories and use of limit simulation tools (finite element calculation) for the design of critical components.
  - Transport simulation test in the laboratory on a vibrating table. The test is based on a military standard and equi-valent to 4000 km by truck.
  - Salt mist corrosion resistance test in the laboratory for increased corrosion resistance.

06T Screw Compressor

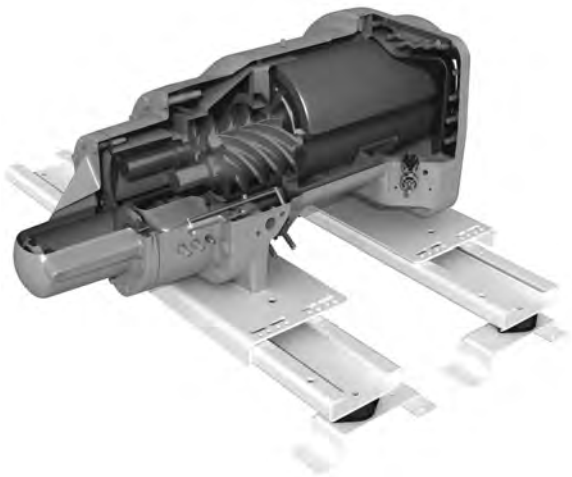

The Carrier 06T screw compressor benefits from Carrier's long experience in the development of twin-rotor screw compressors. The compressor is equipped with bearings with oversized rollers, oil pressure lubricated for reliable and durable operation, even at maximum load.

A variable control valve controlled by the oil pressure permits infinitely variable cooling capacity. This system allows optimal adjustment of the compressor cooling capacity and ensures exceptionally high stability of the chilled water leaving temperature.

Among the other advantages: if a fault occurs e.g. if the condenser is fouled or at very high outside temperature, the compressor does not switch off, but continues operation with a reduced capacity (unloaded mode).

The compressor is equipped with a separate oil separator that minimises the amount of oil in circulation in the refrigerant circuit and with its integrated silencer considerably reduces discharge gas pulsations for much quieter operation.

Novation® Heat Exchangers with Micro-Channel coil Technology

Already utilised in the automobile and aeronautical industries for many years, the MCHE micro-channel heat exchanger used in the AquaForce is entirely made of aluminium. This one-piece concept significantly increases its corrosion resistance by eliminating the galvanic currents that are created when two different metals (copper and aluminium) come into contact in traditional heat exchangers. Unlike traditional heat exchangers the MCHE heat exchanger can be used in moderate marine and urban environments (Carrier recommendation).

From an energy efficiency point-of-view the MCHE heat exchanger is approximately 10% more efficient than a traditional coil and allows a 30% reduction in the amount of refrigerant used in the chiller. The low thickness of the MCHE reduces air pressure losses by 50% and makes it susceptible to very little fouling (e.g. by sand). Cleaning of the MCHE heat exchanger is very fast using a high-pressure washer.

To ensure constant level of performance during time and protect coils from early deterioration or, what's worse, refrigerant leaks, Carrier offers (as options) dedicated treatments for installations in corrosive environments.

The Novation® heat exchangers with Enviro-Shield protection (option 262) are recommended for installations in moderately corrosive environments. The Enviro-Shield protection utilises corrosion inhibitors which actively arrest oxidation in case of mechanical damage.

The Novation® heat exchangers with the exclusive Super Enviro-Shield protection (option 263) are recommended for installations in corrosive environments. The Super Enviro-Shield protection consist in an extremely durable and flexible epoxy coating uniformly applied over all coil surfaces for complete isolation from the contaminated environment.

Touch Pilot Control

Touch Pilot control, 5” user interface

- New innovative smart control features:
  - An intuitive and user-friendly, coloured, 5'' interface (7" optional)
  - Direct access to the unit's technical drawings and the main service documents
  - Screen-shots with coincisive and clear information in local languages
  - Complete menu, customised for different users (end user, service personnel and Carrier-factory technicians)
  - Easy access to the controller box with inclined touch screen mounting to ensure legibility under any lighting conditions
  - Safe operation and unit setting: password protection ensures that unauthorised people cannot modify any advanced parameters
  - Simple and "smart" intelligence uses data collection from the constant monitoring of all machine parameters to optimise unit operation.
- Energy management:
  - Internal time schedule clock controls chiller on/off times and operation at a second set-point
  - The DCT (Data Collection Tool) records the alarms history to simplify and facilitate service operations.

Remote Management (Standard)

- Units with Touch Pilot control can be easily accessed from the internet, using a PC with an Ethernet connection. This makes remote control quick and easy and offers significant advantages for service operations.
- AquaForce is equipped with an RS485 serial port that offers multiple remote control, monitoring and diagnostic possibilities. When networked with other Carrier equipment through the CCN (Carrier Comfort Network - proprietary protocol), all components form a HVAC system fully-integrated and balanced through one of the Carrier's network system products, like the Chiller System Manager or the Plant System Manager (optional).
- AquaForce also communicates with other building management systems via optional communication gateways.
- The following commands/visualisations are possible from remote connection:
  - Start/stop of the machine
  - Dual set-point management: through a dedicated contact is possible to activate a second set-point (example: unoccupied mode)
  - Demand limit setting: to limit the maximum chiller capacity to a predefined value
  - Water pump control: these outputs control the contactors of one/two evaporator water pums
  - Water pumps on reversal (only with options 116C/116G): these contacts are used to detect a water pump operation fault and automatically change over to the other pump
  - Operation visualisation: indication if the unit is operating or if it's in stand-by (no cooling load) - alarm visualisation.

Operating limits

Evaporator water temperature, °C	Minimum	Maximum
Water entering temperature at start-up	-	45*
Water entering temperature during operation	6.8	21
Water leaving temperature during operation	3.3	15

Note: If the leaving water temperature is below 4 °C, a glycol/water solution or the frost protection option must be used.

Condenser air temperature, °C	Minimum	Maximum
Storage	-20	68
Operation:		
Standard unit	-10	55**
With winter operation option (option 28)	-20	55**
With high energy efficiency option (option 119)***	-10	55****

Note: If the air temperature is below 0 °C, a glycol/water solution or the frost protection option must be used.
* Based on the installation type and the air temperature
** Part load, based on the water temperature
*** Recommended for operation above 46 °C
**** Part-load operation

Evaporator water flow rate (l/s)*		
30XA	Minimum	Maximum**
252	3.6	37.5
302	4.0	40.5
352	4.3	40.5
402	5.3	34.1
452	6.0	36.9
504	6.7	42.0
502	6.7	42.0
602	8.1	45.0
702	8.9	56.1
752	9.6	59.1
802	10.4	67.1
854	11.0	67.1
852	11.0	67.1
904	11.8	73.9
902	11.8	73.9
1002	13.1	83.9
1112	15.1	126.5
1212	16.4	132.1
1312	17.5	118.5
1382	18.8	131.1
1402	19.3	107.4
1502	19.9	109.4
1702	22.0	107.4

* Standard evaporators with water as the heat transfer fluid.
** The maximum water flow rate corresponds to a pressure drop of 100 kPa.

Operating range

30XA standard unit and 30XA504, 854, 904 with option 119

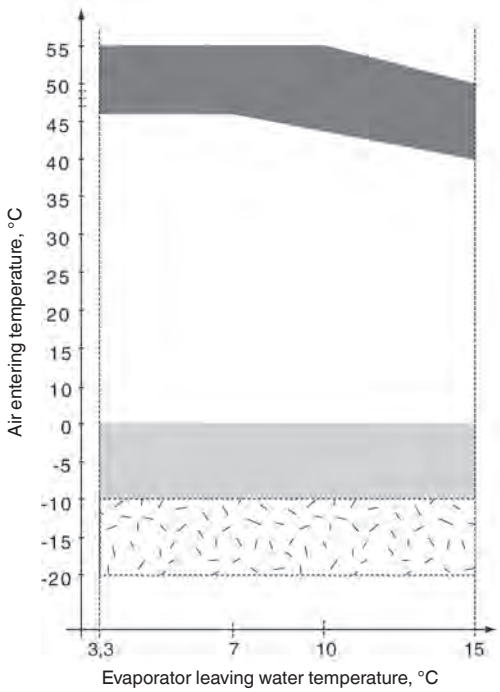

30XA high-energy efficiency unit or unit with option 119

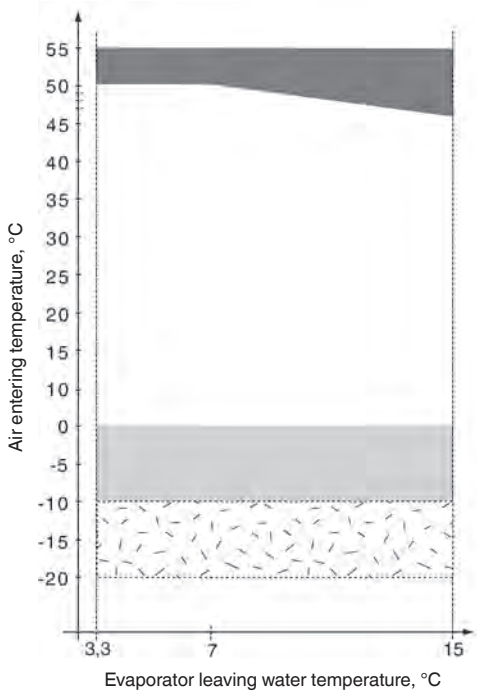

Legend

Operating range, unit equipped with option 28 (winter operation)

Below 0 °C air temperature the unit must either be equipped with the evaporator frost protection option (41A or 41B), or the water loop must be protected against frost by using a frost protection solution (by the installer).

Part load average

Hydronic module (options 116B, C, F, G)

Typical water circuit diagram

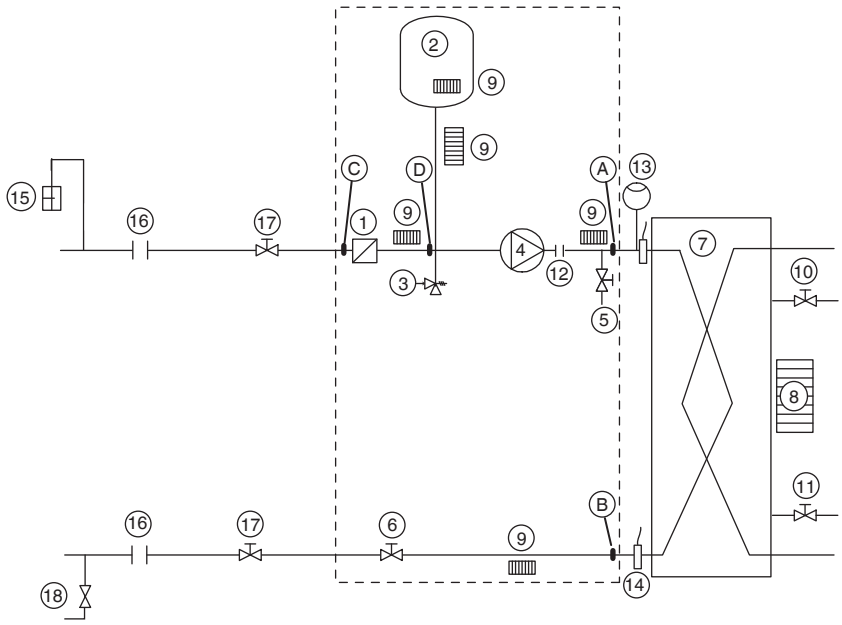

Legend

Components of unit and hydronic module

A Pressure sensor (A-B = Δp evaporator)
B Pressure sensor
C Pressure sensor (C-D = Δp water filter)
D Pressure sensor
1 Victaulic screen filter
2 Expansion tank
3 Safety valve
4 Available pressure pump
5 Drain valve
6 Water flow control valve
7 Evaporator
8 Evaporator defrost heater (option)
9 Hydronic module defrost heater
10 Air vent (evaporator)
11 Water purge (evaporator)
12 Expansion compensator (flexible connections)
13 Flow switch
14 Water temperature sensor

System components (field-supplied)

15 Air vent
16 Flexible connection
17 Shut-down valves
18 Charge valve
---Hydronic module (option)

Electrical data (options 116B, C, F, G)

The pumps that are factory-installed in these units have motors with efficiency class IE2. The additional electrical data required by regulation 640/2009 is given in the installation, operation and maintenance manual.

This regulation concerns the application of directive 2005/32/EC on the eco-design requirements for electric motors.

Pump curve (options 116B, C, F, G)

Conditions and limits of use:

- Fresh water 20 °C
- In case of use of the glycol, the maximum water flow is reduced. When the glycol is used, it's limited to 40%.

Low-pressure pump (hydronic module option)

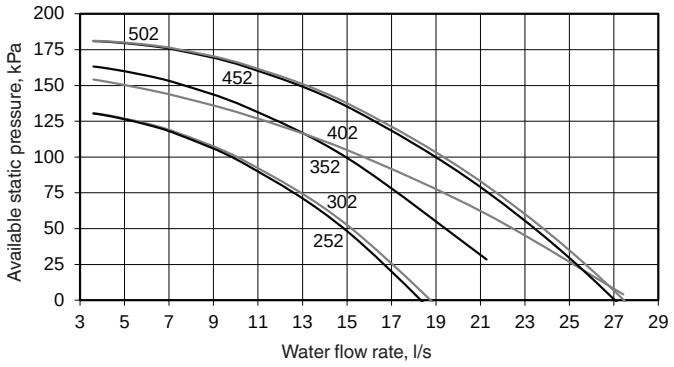

High-pressure pump (hydronic module option)

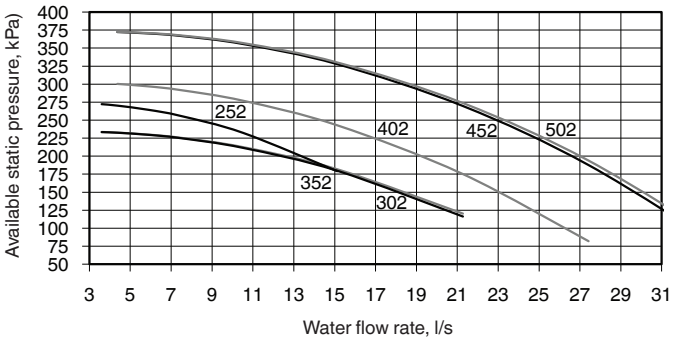

Dimensions/clearances

30XA 252-352 - MCHE heat exchanger (standard)
30XA 252-302 - Cu/Al heat exchanger (option 254/255)

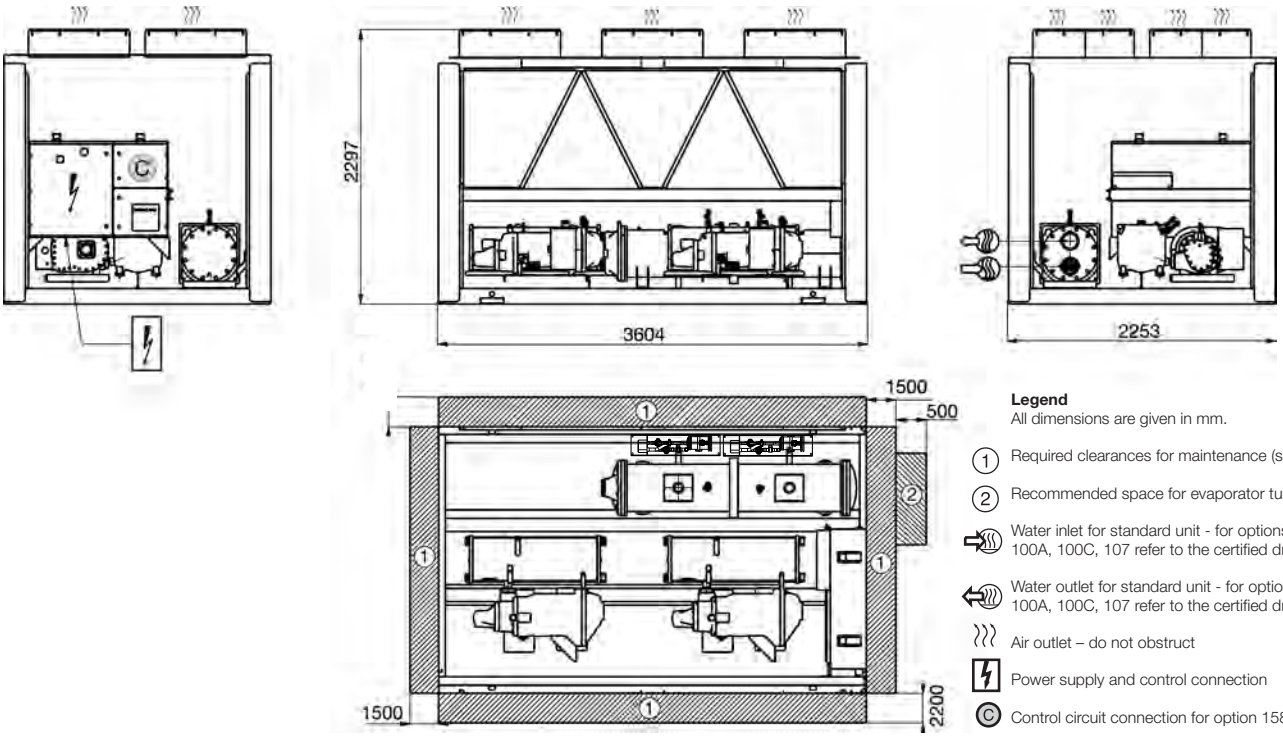

Legend
All dimensions are given in mm.

1. Required clearances for maintenance (see note)
2. Recommended space for evaporator tube removal

Water inlet for standard unit - for options 5, 6, 100A, 100C, 107 refer to the certified drawing.

Water outlet for standard unit - for options 5, 6, 100A, 100C, 107 refer to the certified drawing.

Air outlet – do not obstruct

Power supply and control connection

Control circuit connection for option 158

30XA 402-452-504 - MCHE heat exchanger (standard)
30XA 352-452 - Cu/Al heat exchanger (option 254/255)

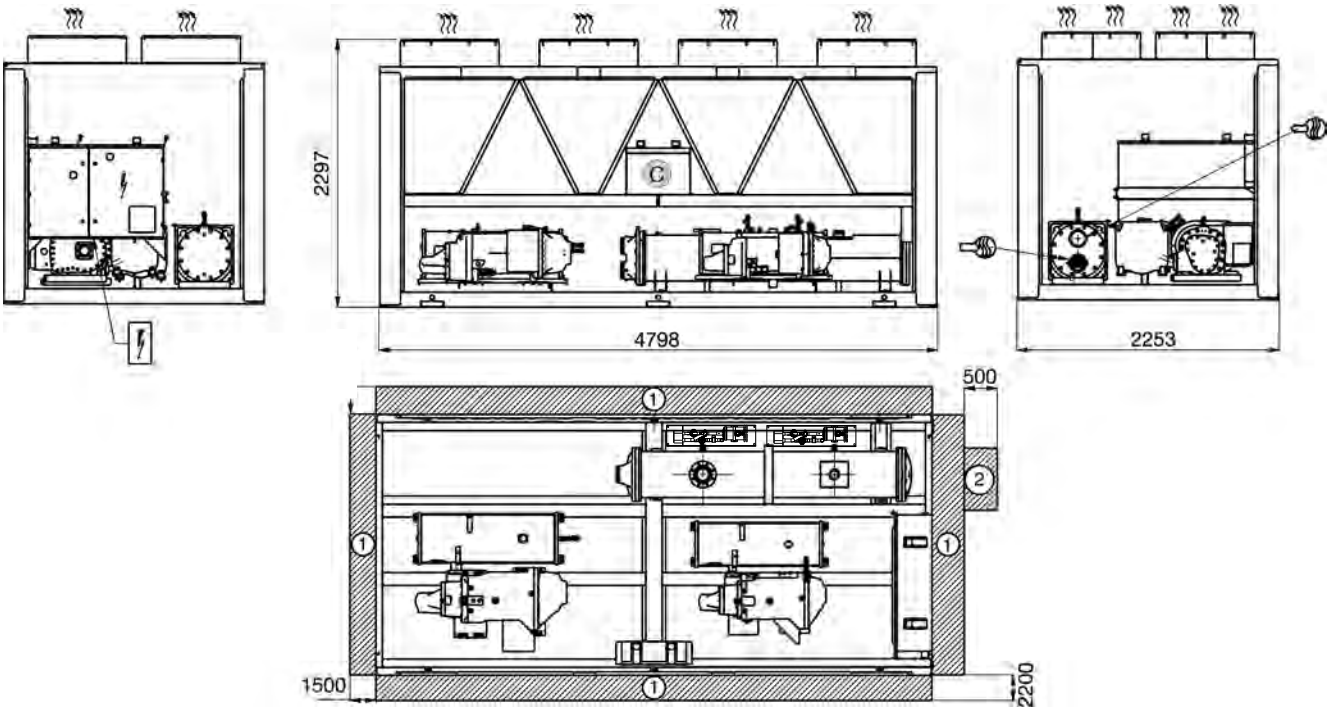

Notes:

Drawings are not contractually binding.
Before designing an installation, consult the certified dimensional drawings, available on request.
If the installation includes several units or if this (these) is (are) close to walls, please refer to chapters 3.13 - "Multiple chiller installation" and 3.14 - "Distance to the wall" of the installation manual to determine the space required.

Dimensions/clearances

30XA 502 - MCHE heat exchanger (standard)
30XA 502 - Cu/Al heat exchanger (option 254/255)

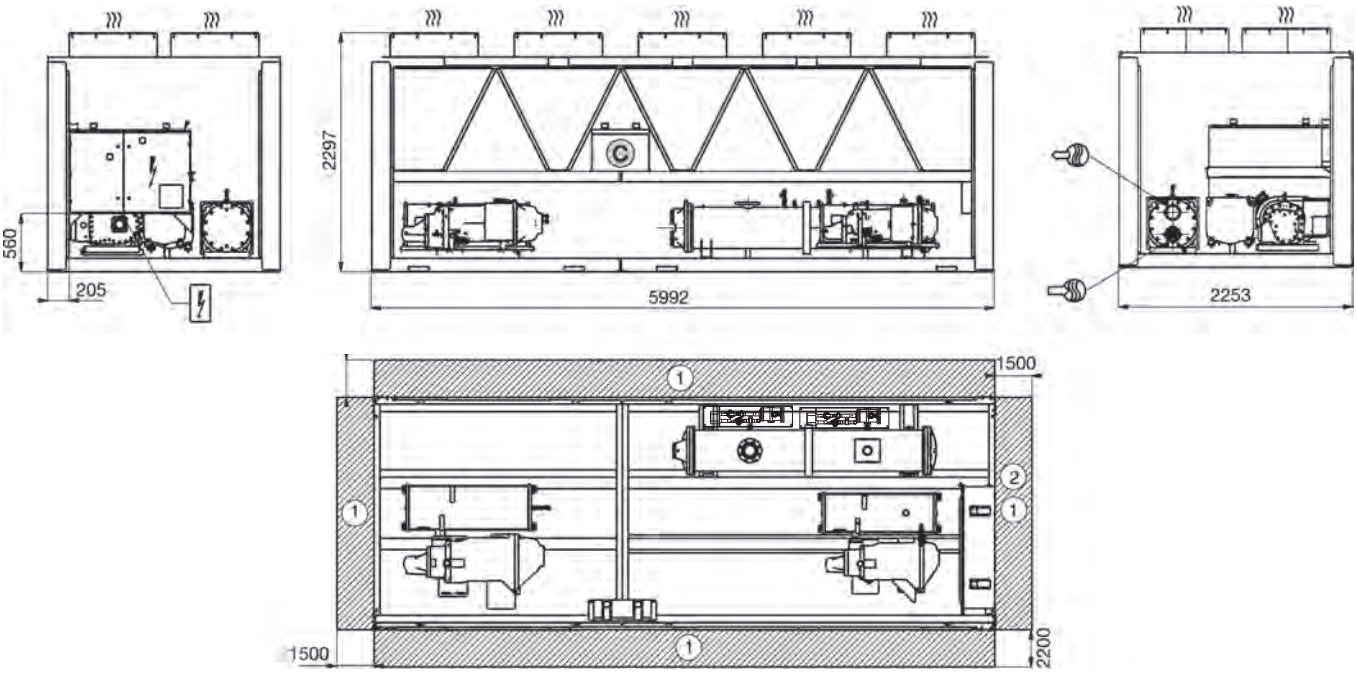

30XA 602-802-854-904 - MCHE heat exchanger (standard)
30XA 602-702 - Cu/Al heat exchanger (option 254/255)

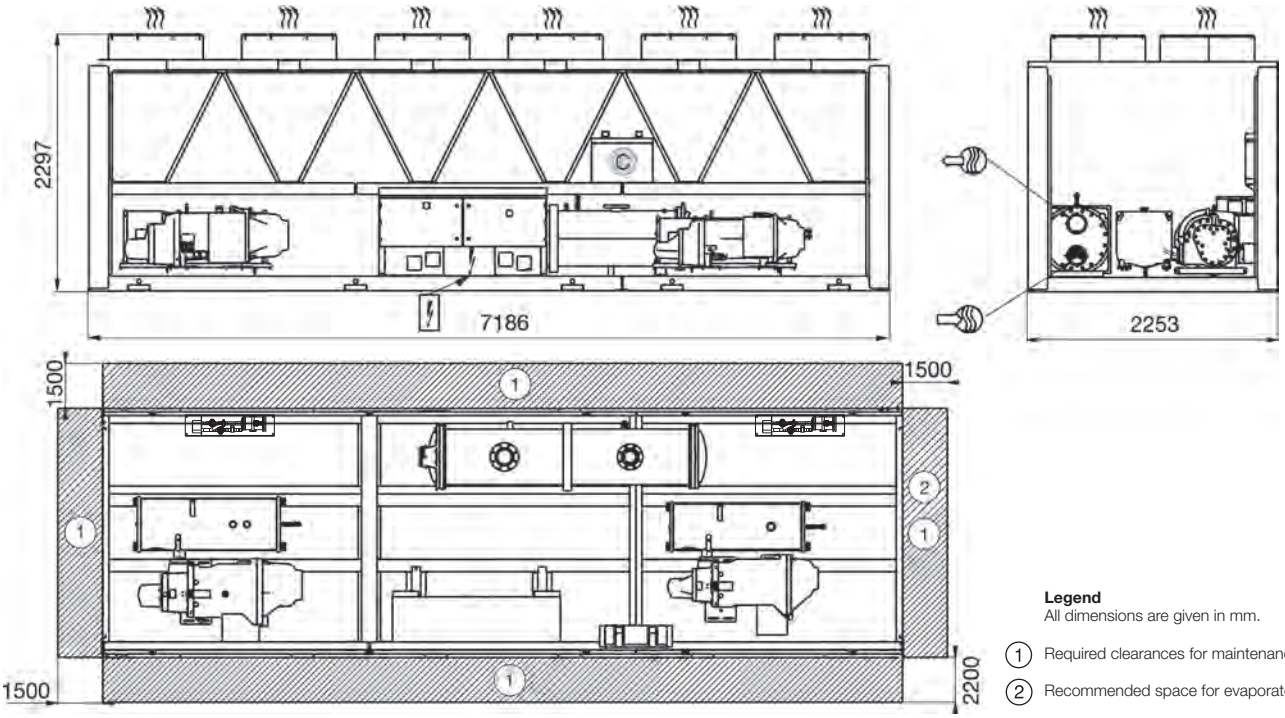

Legend
All dimensions are given in mm.

- (1) Required clearances for maintenance (see note)
- (2) Recommended space for evaporator tube removal
- Water inlet for standard unit - for options 5, 6, 100A, 100C, 107 refer to the certified drawing.
- Water outlet for standard unit - for options 5, 6, 100A, 100C, 107 refer to the certified drawing.
- Air outlet – do not obstruct
- Power supply and control connection
- (C) Control circuit connection for option 158

Notes:

Drawings are not contractually binding.
Before designing an installation, consult the certified dimensional drawings, available on request.
If the installation includes several units or if this (these) is (are) close to walls, please refer to chapters 3.13 - "Multiple chiller installation" and 3.14 - "Distance to the wall" of the installation manual to determine the space required.

Dimensions/clearances

30XA 852-902 - MCHE heat exchanger (standard)
30XA 752-852 - Cu/Al heat exchanger (option 254/255)

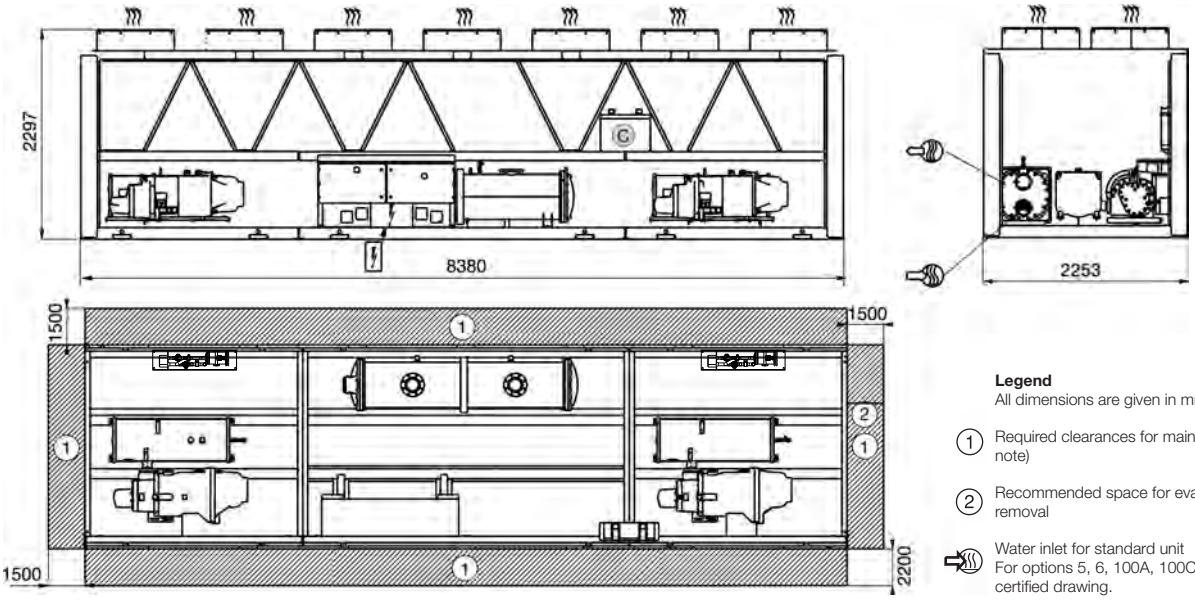

Legend
All dimensions are given in mm.

1 Required clearances for maintenance (see note)

2 Recommended space for evaporator tube removal

Water inlet for standard unit
For options 5, 6, 100A, 100C, 107 refer to the certified drawing.

Water outlet for standard unit
For options 5, 6, 100A, 100C, 107 refer to the certified drawing.

Air outlet – do not obstruct

Power supply and control connection

C Control circuit connection for option 158

30XA 1002 - MCHE heat exchanger (standard)
30XA 902-1002 - Cu/Al heat exchanger (option 254/255)

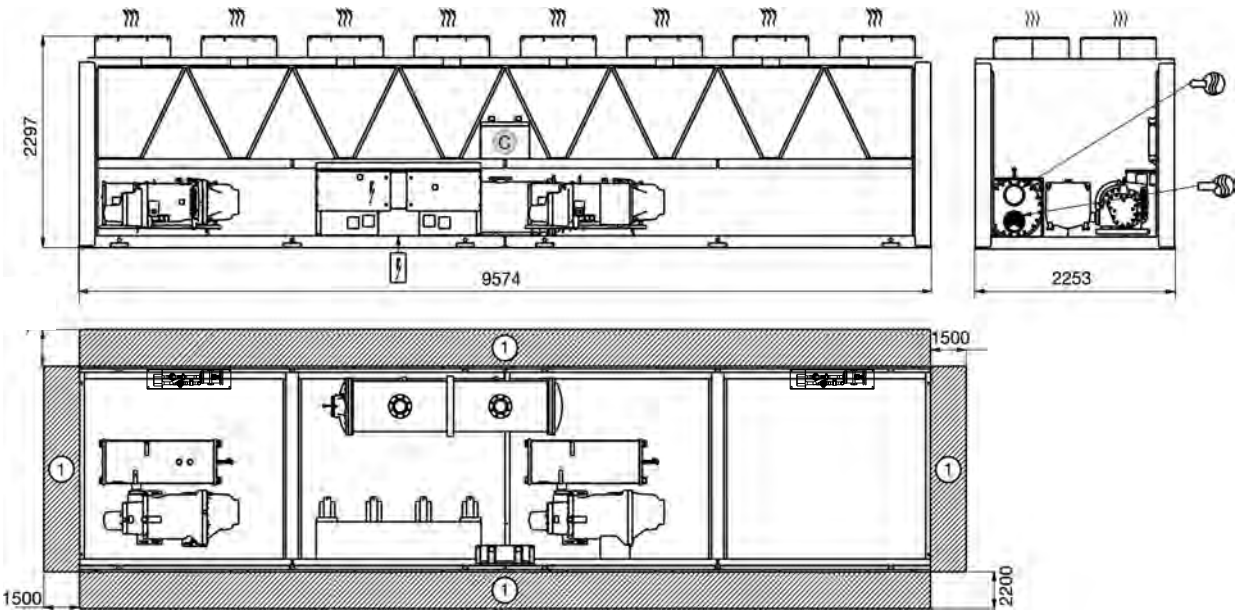

Notes:

Drawings are not contractually binding.
Before designing an installation, consult the certified dimensional drawings, available on request.
If the installation includes several units or if this (these) is (are) close to walls, please refer to chapters 3.13 - "Multiple chiller installation" and 3.14 - "Distance to the wall" of the installation manual to determine the space required.

Dimensions/clearances

30XA 1112, 1212, 1312, 1382 - MCHE heat exchanger (standard)
30XA 1112, 1212, 1312, 1382 - Cu/Al heat exchanger (option 254/255)

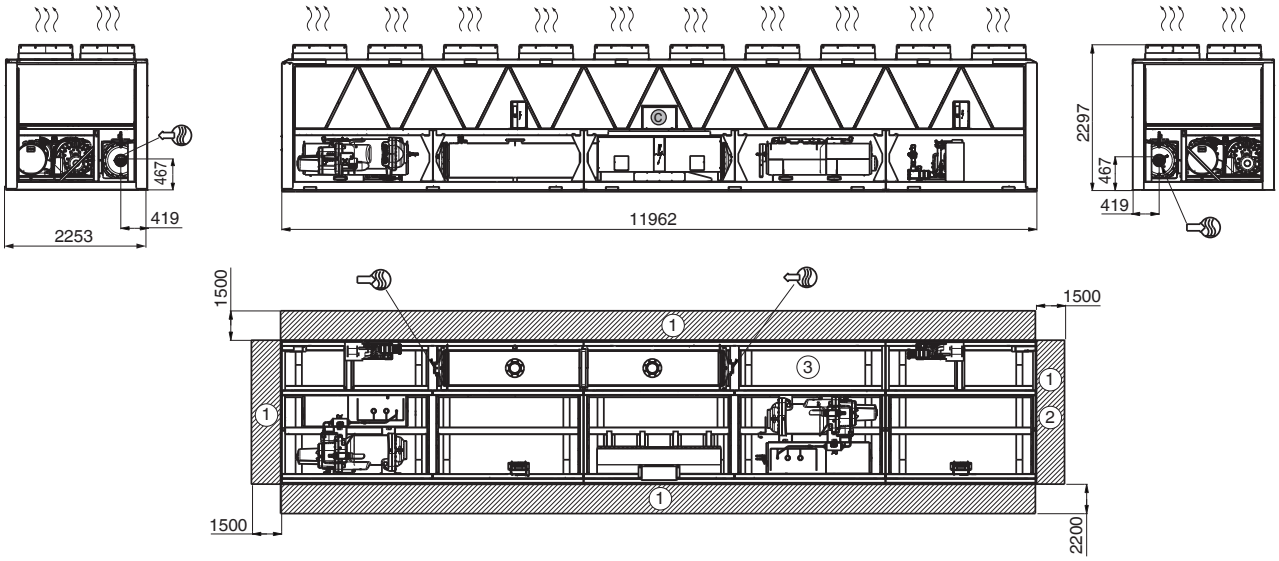

Legend
All dimensions are given in mm.

- (1) Required clearances for maintenance (see note)
- (2) Recommended space for evaporator tube removal
- (3) Required clearances for maintenance if options 100A + 107 are used together
- Water inlet for standard unit - for options 5, 6, 100A, 100C, 107 refer to the certified drawing
- Water outlet for standard unit - for options 5, 6, 100A, 100C, 107 refer to the certified drawing
- Air outlet – do not obstruct
- Power supply and control connection
- Control circuit connection for option 158

Notes:
Drawings are not contractually binding.
Before designing an installation, consult the certified dimensional drawings, available on request.
If the installation includes several units or if this (these) is (are) close to walls, please refer to chapters 3.13 - "Multiple chiller installation" and 3.14 - "Distance to the wall" of the installation manual to determine the space required.

Dimensions/clearances

30XA 1402-1502 module 1/2 - MCHE heat exchanger (standard)
30XA 1402-1502 module 1/2 - Cu/Al heat exchanger (option 254/255)

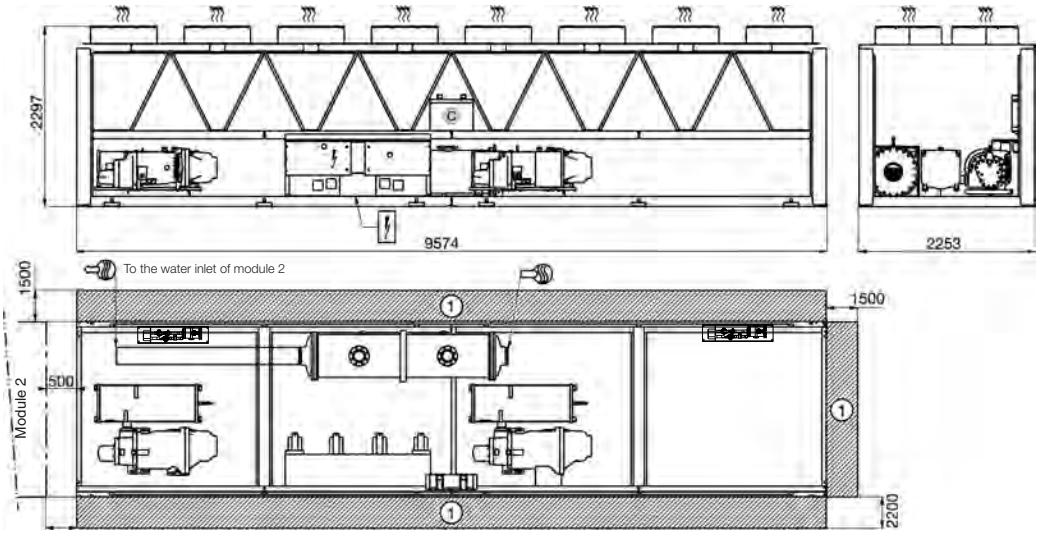

Legend
All dimensions are given in mm.

(1) Required clearances for maintenance (see note)

(2) Recommended space for evaporator tube removal

Water inlet for standard unit
For options 5, 6, 100A, 100C, 107 refer to the certified drawing.

Water outlet for standard unit
For options 5, 6, 100A, 100C, 107 refer to the certified drawing.

Air outlet – do not obstruct

Power supply and control connection

(C) Control circuit connection for option 158

30XA 1402-1502 module 2/2 - MCHE heat exchanger (standard)
30XA 1402-1502 module 2/2 - Cu/Al heat exchanger (option 254/255)

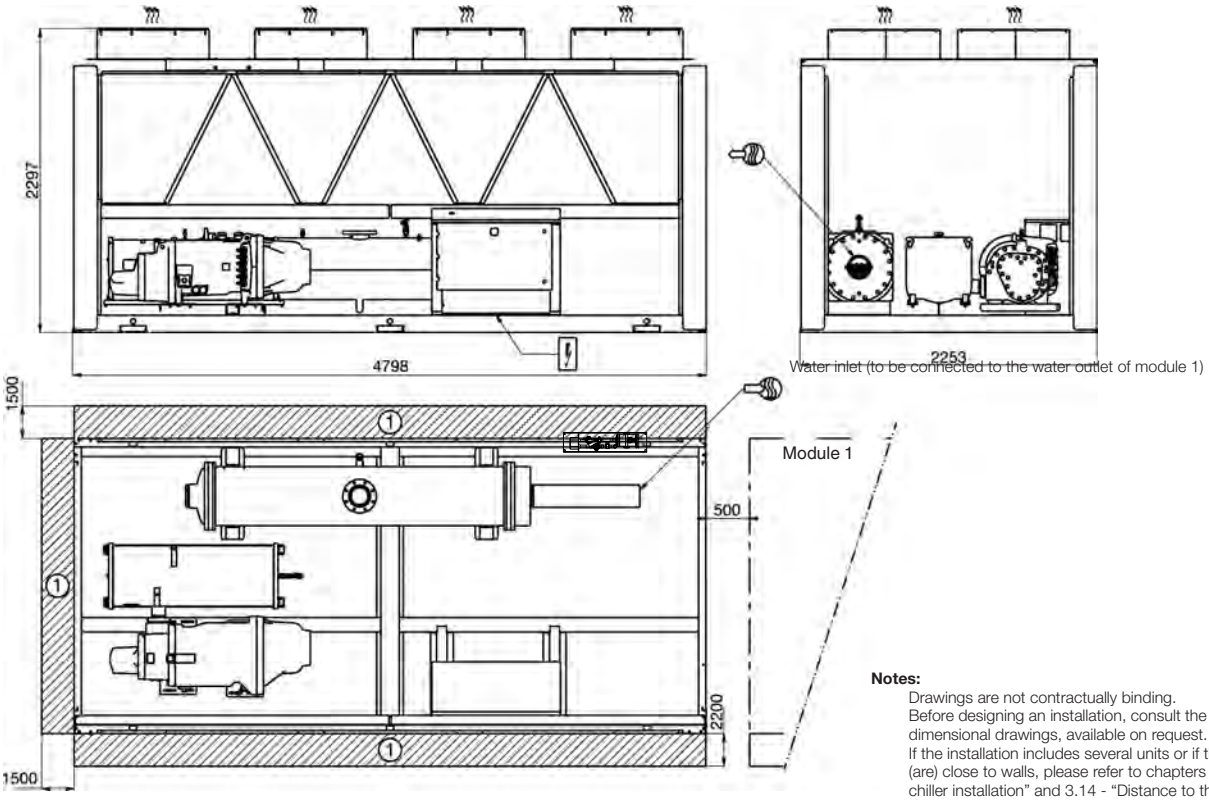

Notes:
Drawings are not contractually binding.
Before designing an installation, consult the certified dimensional drawings, available on request.
If the installation includes several units or if this (these) is (are) close to walls, please refer to chapters 3.13 - "Multiple chiller installation" and 3.14 - "Distance to the wall" of the installation manual to determine the space required.

Dimensions/clearances

30XA 1702 module 1/2 - MCHE heat exchanger (standard)
30XA 1702 module 1/2 - Cu/Al heat exchanger (option 254/255)

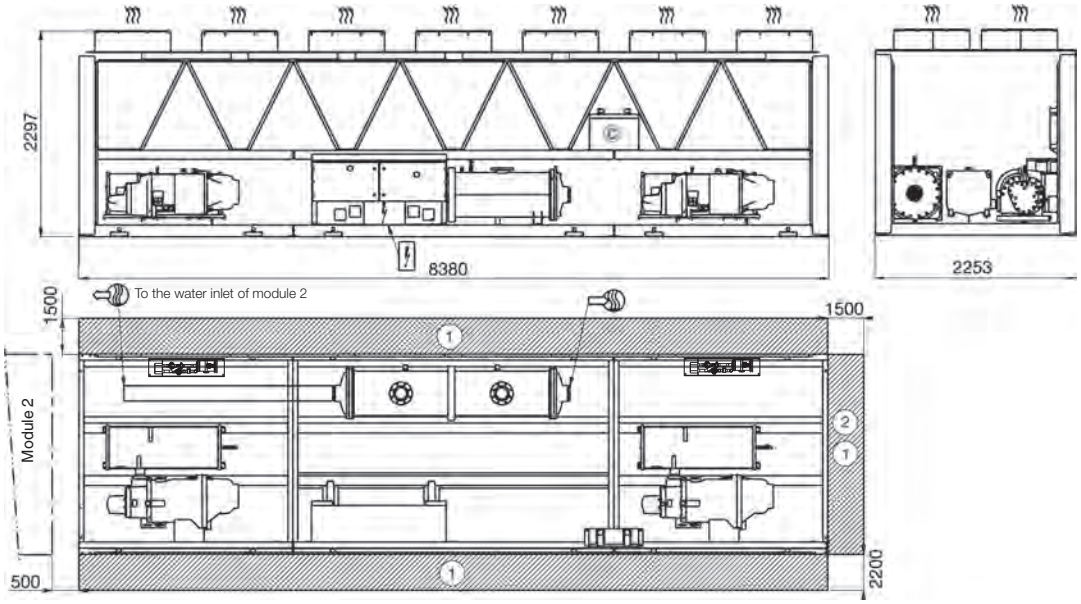

Legend
All dimensions are given in mm.

(1) Required clearances for maintenance (see note)

(2) Recommended space for evaporator tube removal

Water inlet for standard unit
For options 5, 6, 100A, 100C, 107 refer to the certified drawing.

Water outlet for standard unit
For options 5, 6, 100A, 100C, 107 refer to the certified drawing.

Air outlet – do not obstruct

Power supply and control connection

(C) Control circuit connection for option 158

30XA 1702 module 2/2 - MCHE heat exchanger (standard)
30XA 1702 module 2/2 - Cu/Al heat exchanger (option 254/255)

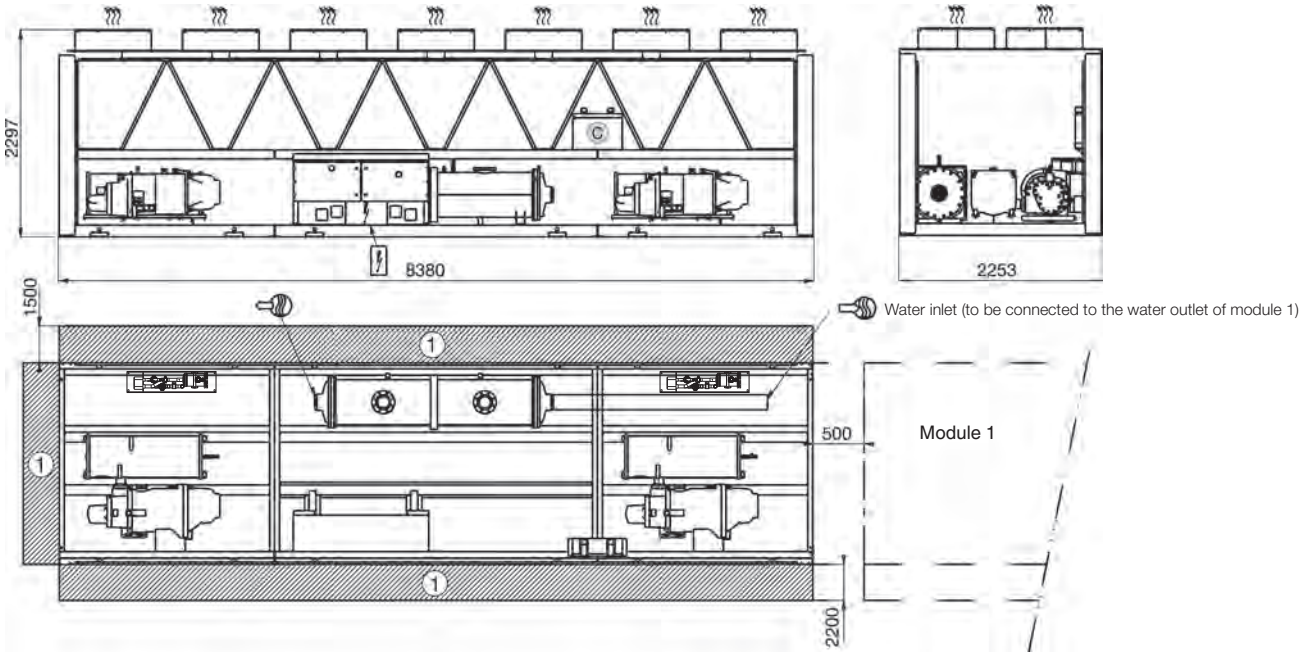

Notes:

Drawings are not contractually binding.
Before designing an installation, consult the certified dimensional drawings, available on request.
If the installation includes several units or if this (these) is (are) close to walls, please refer to chapters 3.13 - "Multiple chiller installation" and 3.14 - "Distance to the wall" of the installation manual to determine the space required.

30XAV

Nominal cooling capacity 504-1138 kW

greenspeed AQUAFORCE

Low energy consumption

Built in reliability and easy servicing

Minimised operating sound levels

Improved electrical performance

The AquaForce chillers with Greenspeed® Intelligence are the premium solution for commercial and industrial applications where installers, consultants and building owners require superior reliability and optimal performances, especially at part load.

The units are designed to operate up to 50 °C outside air temperature.

The 30XAV units are designed to meet current and future requirements in terms of energy efficiency, versatility and operating sound levels. This result is achieved through the optimised combination of proven best-in-class technologies that include:

- Exclusive high-efficiency variable-speed screw of the proven traditional Carrier twin-screw compressor design
- New Touch Pilot™ control
- Variable-speed condenser fans
- Mechanically cleanable flooded evaporator
- Novation® heat exchanger with micro-channel coil technology.

As standard, the unit can provide an evaporator leaving temperature down to 3.3 °C with proven operation for outdoor air temperatures ranging from -20 °C to 50 °C.

Furthermore, with 30XAV, Carrier offers its unique expertise and know-how to take care of the machine long after the sale. With the new “CARRIER® CONNECT” system in fact, energy and facility managers and end-users in general can rely on the most qualified remote monitoring services.

Physical data

30XAV		500	600	700	800	950	1050	1150
Cooling								
Air conditioning application as per EN14511-3:2013† - standard unit with option 279*								
Nominal cooling capacity	kW	504	607	687	803	910	1041	1138
ESEER	kW/ kW	4.59	4.67	4.79	4.90	4.72	4.68	4.84
EER	kW/ kW	3.22	3.23	3.29	3.28	3.12	3.08	3.1
Eurovent class cooling		A	A	A	A	A	B	A
Air conditioning application†† - standard unit with option 279*								
Nominal cooling capacity	kW	506	609	689	806	912	1044	1141
ESEER	kW/ kW	4.88	4.97	5.16	5.15	4.94	4.91	5.05
EER	kW/ kW	3.25	3.26	3.34	3.32	3.16	3.12	3.14
IPLV	kW/ kW	5.20	5.21	5.51	5.57	5.33	5.29	5.50
Sound levels								
Standard unit								
Sound power level***	dB(A)	102	103	103	103	105	106	106
Sound pressure level at 10 m****	dB(A)	70	70	70	70	72	73	73
Standard unit + option 279*								
Sound power level***	dB(A)	99	100	100	100	102	103	103
Sound pressure level at 10 m****	dB(A)	67	68	68	67	69	70	70
Standard unit + option 257*								
Sound power level***	dB(A)	96	97	97	97	99	100	100
Sound pressure level at 10 m****	dB(A)	63	65	64	64	66	67	67
Dimensions - standard unit								
Length	mm	6092	6092	7186	8380	9573	10767	11962
Width	mm	2253	2253	2253	2253	2253	2253	2253
Height	mm	2297	2297	2297	2297	2297	2297	2297
Operating Weight **								
Standard unit	kg	4831	5219	5767	6420	6806	7687	8076
Compressors								
Circuit A		1	1	1	1	1	1	1
Circuit B		1	1	1	1	1	1	1
Refrigerant - Standard unit**	R134a							
Circuit A	kg	50	52	56	64	79	80	84
	$teqCO_2$	71.5	74.4	80.1	91.5	113.0	114.4	120.1
Circuit B	kg	43	54	58	67	71	82	87
	$teqCO_2$	61.5	77.2	82.9	95.8	101.5	117.3	124.4
Capacity control	Touch Pilot control							
Minimum capacity	%	10	10	10	10	10	10	10
Condensers	"Micro Channel Heat Exchanger" aluminium coil							
Fans - Standard unit	Axial Flying Bird IV fans with rotating shroud							
Quantity		9	10	12	14	16	18	20
Total air flow		40608	45120	54144	63168	72192	81216	90240
Rotation speed	r/s	15.7	15.7	15.7	15.7	15.7	15.7	15.7
Evaporator	Flooded multi-pipe type							
Water content	l	75	90	90	110	120	134	146
Max. water-side operating pressure		1000	1000	1000	1000	1000	1000	1000
Water connection	Victaulic							
Diameter	inch	5	6	6	6	6	8	8
Outside tube diameter	mm	141.3	168.3	168.3	168.3	168.3	219.1	219.1
Chassis paint colour	Colour code: RAL7035							

† Eurovent-certified performances in accordance with standard EN14511-3:2013.
Cooling mode conditions: Evaporator water entering/leaving temperature 12 °C/7 °C, outside air temperature 35 °C. evaporator fouling factor 0 m^2 k/W

†† Gross performances, not in accordance with EN14511-3:2013. These performances do not take into account the correction for the proportional heating capacity and power input generated by the water pump to overcome the internal pressure drop in the heat exchanger. Evaporator water entering/leaving temperature 12 °C/7 °C, outside air temperature 35 °C. evaporator fouling factor 0 m^2 k/W

* Options: 257 = low noise level, 279 = compressor enclosure.

** Weights are guidelines only. Refer to the unit nameplate.

*** In dB ref=10^{-12} W, (A) weighting. Declared dualnumber noise emission values in accordance with ISO 4871 (with an associated uncertainty of +/-3 dB(A)). Measured in accordance with ISO 9614-1 and certified by Eurovent.

**** In dB ref 20µPa, (A) weighting. Declared dualnumber noise emission values in accordance with ISO 4871 (with an associated uncertainty of +/-3 dB(A)). For information, calculated from the sound power level Lw(A).

Eurovent certified data

Electrical data

30XAV		500	600	700	800	950	1050	1150
Power circuit								
Nominal power supply	V-ph-Hz	400-3-50±10%						
Control circuit supply		24 V via internal transformer						
Start-up current*		Not Applicable (less than the operating current)						
Power factor**								
Maximum***		0.91-0.93						
Cos phi		> 0.98						
Total harmonic distortion***	%	35-45						
Maximum unit power input****								
Circuit 1†	kW	223	255	293	186	231	231	255
Circuit 2†	kW	-	-	-	186	186	231	255
Option 81	kW	-	-	-	373	417	61	510
Nominal unit current draw††								
Circuit 1†	A	260	306	346	218	264	264	293
Circuit 2†	A	-	-	-	218	218	264	293
Option 81	A	-	-	-	436	482	528	586

* Instantaneous start-up current
** This can vary as a function of the short-circuit current/maximum current ratio of the system transformer.
*** Values obtained at operation with maximum unit power input
**** Values obtained at operation with maximum unit power input. Values given on the unit name plate.
† When the machines are equipped with two power supplies, circuit 1 is dedicated for supplying refrigerant circuit A, and circuit 2 is dedicated for supplying refrigerant circuit B.
†† Values obtained at the normalized Eurovent operating point of the unit: air 35 °C, water 12/7 °C.

Note: Motor and fan electrical data if the unit operates at Eurovent conditions (motor ambient temperature 50°C): 1.9 A, start-up current: 8.4 A, power input: 760 W.

Options

Remote management (EMM option)

- The Energy Management Module (EMM) offers extended remote control possibilities:
  - Room temperature: Permits set-point reset based on the building indoor air temperature (if Carrier thermostat are installed)
  - Set-point reset: Ensures reset of the cooling set-point based on a 4-20 mA or 0-10 V signal
  - Demand limit: Permits limitation of the maximum chiller capacity based on 0-10 V signal
  - Demand limit 1 and 2: Closing of these contacts limits the maximum chiller capacity to two predefined values.
  - User safety: This contact can be used for any customer safety loop; opening the contact generates a specific alarm.
  - Ice storage end: When ice storage has finished, this input permits return to the second set-point (unoccupied mode).
  - Time schedule override: Closing of this contact cancels the time schedule effects
  - Out of service: This signal indicates that the chiller is completely out of service.
  - Chiller capacity: This analogue output (0-10 V) gives an immediate indication of the chiller capacity.
  - Alert indication: This volt-free contact indicates the necessity to carry out a maintenance operation or the presence of a minor fault.
  - Compressors running status: Set of outputs (as many as the compressors number) indicating which compressors are running.

Options	No.	Description	Advantages	Use 30XAV
IP54 control box	20A	Increased leak tightness of control boxes	Protects the inside of the electrical box from dusts and sand. In general this option is recommended for installations in polluted environments	500-1150
Grilles and enclosure panels	23	Metal grilles on the 4 unit sides, plus side enclosure panels at each end of the coil	Improves aesthetics, protection against intrusion to the unit interior, coil and piping protection against impacts.	500-1150
Enclosure panels	23A	Side enclosure panels at each end of the coil	Improves aesthetics, coil and piping protection against impacts.	500-1150
Evaporator frost protection	41A	Electric resistance heater on the evaporator and discharge valve	Evaporator frost protection down to -20°C outside temperature	500-1150
Evap.and hydraulic mod. frost protection	41B	Electric resistance heater on evaporator, discharge valve and hydronic module	Evaporator and hydronic module frost protection down to -20°C outside temperature	Sizes 500/600 only
Master/slave operation	58	Unit equipped with supplementary water outlet temperature sensor kit to be field-installed allowing master/slave operation of two units connected in parallel	Optimised operation of two chillers connected in parallel with operating time equalisation	500-1150
Fuses on main disconnect switch	70D	Factory installed additional fuses, one per each phase, to protect main switch and associated cables from over-current flow (Note: frequency drives and electronic boards are protected as standard by dedicated fuses. Option 70D recommended when compliant protection devices on field not present)	No need for separate fuse box. Save time and money on site installation and avoid additional space requirement	600-1150 (standard on size 500)
Single power connection point	81	Unit power connection via one main supply connection (include option 70D)	Quick and easy installation	800-1150
Evaporator and Pump/s with aluminium jacket	88A	Evaporator and Pumps covered with an aluminium sheet for thermal insulation protection	Improved resistance to aggressive climate conditions	Sizes 500/600 only
Service valve set	92	Liquid line valve (evaporator inlet), compressor suction and discharge line valves and economiser line valve	Allow isolation of various refrigerant circuit components for simplified service and maintenance	500-1150
Compressor discharge valves	93A	Shut-off valve on the compressor discharge piping	Simplified maintenance	500-1150
Evaporator with one pass less	100C	Evaporator with one pass on the water side. Evaporator inlet and outlet on opposite sides.	Easy to install, depending on site. Reduced pressure drops	500-1150
21 bar evaporator	104	Reinforced evaporator for extension of the maximum water-side service pressure to 21 bar (standard 10 bar)	Covers applications with a high water column evaporator side (typically high buildings)	500-1150
Reversed evaporator water connections	107	Evaporator with reversed water inlet/ outlet	Easy installation on sites with specific requirements	Sizes 500/600/ 950/1050/1150 only
HP single-pump hydronic module	116R	Complete hydronic module equipped with water filter, safety valve, one high pressure pump and drain valve. For more details, refer to the dedicated chapter (expansion tank not included)	Easy and fast installation (plug & play)	Sizes 500/600 only
HP dual-pump hydronic module	116S	Complete hydronic module equipped with water filter, safety valve, two high pressure pumps and drain valve. For more details, refer to the dedicated chapter (expansion tank not included)	Easy and fast installation (plug & play). Increased system reliability	Sizes 500/600 only
LP single-pump hydronic module	116T	Complete hydronic module equipped with water filter, safety valve, one low pressure pump and drain valve. For more details, refer to the dedicated chapter (expansion tank not included)	Easy and fast installation (plug & play)	Sizes 500/600 only

Options	No.	Description	Advantages	Use 30XAV
LP dual-pump hydronic module	116U	Complete hydronic module equipped with water filter, safety valve, two low pressure pumps and drain valve. For more details, refer to the dedicated chapter (expansion tank not included)	Easy and fast installation (plug & play). Increased system reliability	Sizes 500/600 only
J-Bus gateway	148B	Two-directional communication board complying with JBus protocol	Connects the unit by communication bus to a building management system	500-1150
Lon gateway	148D	Two-directional communication board complying with Lon Talk protocol	Connects the unit by communication bus to a building management system	500-1150
Bacnet over IP gateway	149	Two-directional high-speed communication using BACnet protocol over Ethernet network (IP)	Easy and high-speed connection by ethernet line to a building management system. Allows access to multiple unit parameters	500-1150
Energy Management Module	156	Control board with additional inputs/ outputs. See Energy Management Module option chapter	Extended remote control capabilities (Set-point reset, ice storage end, demand limits, boiler on/off command...)	500-1150
Leak detection	159	0-10 V signal to report any refrigerant leakage in the unit directly on the controlller (the leak detector itself must be supplied by the customer)	Immediate customer notification of refrigerant losses to the atmosphere, allowing timely corrective actions	500-1150
Dual relief valves installed w/ 3-way valve	194	Three-way valve upstream of the safety valves on the evaporator and the oil separator	Valve replacement and inspection facilitated without refrigerant loss. Comforms to European standard EN378/BGVD4	500-1150
Compliance with Russian regulations	199	GOST certification	Conformance with Russian regulations	500-1150
Compliance with Australian regulations	200	Unit approved to Australian code	Conformance with Australian regulations	500-1150
Insulation of the evap. in/ out ref.lines	256	Thermal insulation of the evaporator entering/leaving refrigerant lines with flexible, anti-UV insulant	Prevents condensation on the evaporator entering/leaving refrigerant lines	500-1150
Low noise level	257	Sound insulation of main noise sources combined with fans speed management (includes option 279)	6 to 10 dB(A) quiter than standard unit (depending model and size). Refer to the physical data table for detailed values	500-1150
Enviro-Shield anti-corrosion protection	262	Coating by conversion process which modifies the surface of the aluminum producing a coating that is integral to the coil. Complete immersion in a bath to ensure 100% coverage. No heat transfer variation, tested 4000 hours salt spray per ASTM B117	Improved corrosion resistance, recommended for use in moderately corrosive environments	500-1150
Super Enviro-Shield anti-corrosion protection	263	Extremely durable and flexible epoxy polymer coating applied on micro channel heat exchangers by electro coating process, final UV protective topcoat. Minimal heat transfer variation, tested 6000 hours constant neutral salt spray per ASTM B117, superior impact resistance per ASTM D2794	Improved corrosion resistance, recommended for use in extremely corrosive environments	500-1150
Welded evaporator water connection kit	266	Victaulic piping connections with welded joints	Easy installation	500-1150
Compressor enclousure	279	Compressor sound enclosure	3 dB(A) quiter than standard unit	500-1150
Evaporator with aluminium jacket	281	Evaporator covered with an aluminium sheet for thermal insulation protection	Improved resistance to aggressive climate conditions	500-1150
EMC classification C2, as per EN 61800-3	282	Additional RFI filters on the unit power line	Reduces electromagnetic interferences. Increase the variable frequency drive (VFD) immunity level according to first environment (so called, residential environment) requirements and allow its compliancy with emissions level required in category C2	500-1150

Options	No.	Description	Advantages	Use 30XAV
230V electrical plug	284	230V AC power supply source provided with plug socket and transformer (180 VA, 0,8 Amps)	Permits connection of a laptop or an electrical device during unit commissioning or servicing	500-1150
Expansion tank	293	6 bar expansion tank in the hydraulic module (require option 116)	Protects closed hydronic circuit from excessive pressure	Sizes 500/600 only
Fast Capacity Recovery	QM295	New software algorithms to allow quick restart and fast loading while preserving unit-reliability	Full capacity recovery in less than 5 minutes after power failure. Matches requirements of typical critical missions applications	500-1150
Carrier Connect link (BSS regions only)	298	3G router board NOTE 1: require option 149 NOTE 2: when more than one machine is installed on site, only one of them shall be equipped with option 298 while all of them must be equipped with option 149 NOTE 3: if a CARRIER-PSM is on site, option 298 shall be integrated in the PSM while option 149 is still mandatory for each single unit.	Enabler for Carrier Connect service offer	500-1150
Variable Water Flow control	299	Hydronic control function package that permits control of the water flow rate based on different possible logics (at customer choice): constant ΔT, constant outlet pressure and "fixed-speed" control.	When variable-speed pumps on the primary circuit, the VWF control modulates flow rate through the evaporator, minimising pump consumption while ensuring safe/ optimised chiller operation	500-1150

Features and advantages

Low energy consumption

- The 30XAV is designed for high performance both at full and part load: ESEER up to 4,9 and EER up to 3,4.
- The high energy efficiency is reached through:
  - Inverter-driven twin-rotor screw compressors allowing precise capacity control and reducing unit power input, especially at part-load
  - Inverter-driven fan motors minimising power consumption while granting optimum air flow
  - All aluminum condenser with high-efficiency micro-channel coils technology
  - Flooded shell-and-tube evaporator characterised by high efficiency of heat exchange
  - Electronic expansion device permitting operation at a lower condensing pressure and improved utilisation of the evaporator heat exchange surface (superheat control)
  - Economiser system with electronic expansion device for increased cooling capacity.
- Optimised electrical performance:
  - Negligible start-up current (value is lower than the maximum unit current draw)
  - High displacement power factor (above 0.98)
  - EMC compliancy with Class 3 requirements of the EU standard EN61800-3 (Class 2 is possible as an option).

Built-in reliability and easy servicing

The 30XAV units offer increased global performance as well as Carrier's acclaimed product quality and reliability. Major components are selected and tested to minimise failures possibility, as well as many design choices have been taken in this perspective.

- Screw compressors with Greenspeed® Intelligence:
  - The screw compressors are industrial-type with oversized bearings and motor cooled by suction gas, with a proven failure rate lower than 0.1%.
  - The inverter is specifically sized for each compressor motor to ensure reliable operation and easy maintenance.
  - All components related to the compressor assembly are easily accessible on site minimising down-time.
- Fans with Greenspeed® Intelligence:
  - 4th generation of Flying Bird fans equipped with inverter-driven asynchronous motors
  - The inverter is sized to manage a group of fan motors reducing first cost while ensuring optimum air flow management.
  - The inverters for fan speed control are easily accessible on site for easy servicing.

- Air condenser:
  - All aluminum micro-channel heat exchanger (MCHE) with high corrosion resistance. The all aluminum design eliminates the formation of galvanic currents between aluminum and copper that cause coil corrosion in saline or corrosive environments.
- Evaporator:
  - Carrier designed flooded evaporator with mechanically cleanable water tubes
  - Electronic paddle-free flow switch to ensure prompt alarm in case of poor liquid flow rate
  - Thermal insulation with aluminum sheet finish (option) for perfect resistance to external aggression (mechanical and UV protection).
- Refrigerant circuits:
  - Two independent refrigerant circuits to secure partial cooling, if one of the two develops a fault.
- Auto-adaptive control:
  - Control algorithm prevents excessive compressor cycling (Carrier patent)
  - Automatic compressor unloading in case of abnormally high condensing pressure. If condenser coil fouling or fan failure occurs, the AquaForce continues to operate, but at reduced capacity.
- Exceptional endurance tests:
  - To design critical components subassembly minimising risk of failure on site, Carrier uses specialised laboratories and advanced dynamic simulation tools.
  - To ensure that the units reach customer sites in the same shape as they are when tested in the factory, Carrier tests the machine behavior while being moved along a 250 km trial. The test is based on a military standard and equal 5000 km by truck in a normal road.
  - To ensure coils corrosion resistance, salt mist corrosion resistance test are performed in Carrier's laboratory.

In addition, to secure the same performance level is kept along the years and to optimise maintenance costs, with “CARRIER CONNECT” the end-user access to most-qualified remote monitoring services.

Minimised operating sound levels

- The Greenspeed® Intelligence, featuring variable-speed screw compressors and condenser fans, minimises noise levels at part load operation. At ESEER conditions for example, noise at 25% load is up to 10 dB(A) lower than noise at full load.

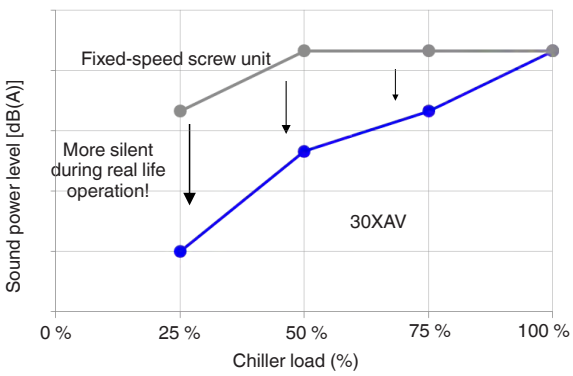

- Standard unit features include:
  - Discharge dampers integrated in the oil separator (Carrier patent)
  - Silencer on the economizer return line
  - Condenser coils in V-shape with an open angle, allowing quieter air flow across the coil
  - Low-noise IV generation Flying Birds fans, made of a composite material (Carrier patent) which do not generate intrusive low frequency noise
  - Rigid fan mounting preventing start-up noise (Carrier patent).
- Multiple options are available to further reduce the global sound level up to 6 dB(A).

Easy and fast installation

- Simplified electrical connections:
  - Main disconnect switch
  - Transformer supply to the integrated control circuit (400/24 V)
  - Single electrical point of connection (optional for sizes 800 to 1150)
  - Factory installed main disconnect fuses (optional for sizes 600 to 1150).
- Simplified water connections:
  - Victaulic connections on the evaporator
  - Practical reference marks for entering and leaving water connections
  - Possibility to choose different evaporator configurations, 1 or 2 passes.
- Fast commissioning:
  - Systematic factory operation test before shipment
  - Functional test for main components, expansion devices, fans and compressors.

Environmental care

- R134a: HFC refrigerant with zero ozone depletion potential
- 30% less refrigerant charge: The micro-channel technology used for condenser coils optimises heat transfer while minimising the refrigerant volume
- Leak tight refrigerant circuits:
  - Reduction of leaks as no capillary tubes and flare connections are used
  - Verification of pressure transducers and temperature sensors without transferring refrigerant charge
  - Discharge line shut-off valve and liquid line service valve for simplified maintenance.
- Refrigerant leaks alarm: Available as an option, this additional dry-contact allows reporting of possible leaks. The leak detector shall be mounted (at customer care) where, refrigerant leaks most likely to happen . Contact Carrier for more details.

Designed to support Green Building Design

A green building is a building that is environmentally sustainable and has been designed, constructed and is operated to minimise the total impact on the environment. The underlying principles of this approach: The resulting building will be economical to operate, offer increased comfort and create a healthier environment for the people who live and work there, increasing productivity.

The air conditioning system can use between 30 and 40% of the annual building energy consumption. Selection of the right air conditioning system is one of the main aspects to consider when designing a green building. For buildings with a variable load throughout the year 30XAV units offers a solution to this important challenge.

A number of green building certification programs exist in the market and offer third-party assessment of green building measures for a wide variety of building types.

The following example looks at how Carrier's new 30XAV range helps customers involved in LEED® building certification.

30XAV and LEED® certification

The LEED® (Leadership in Energy and Environmental Design) green building certification programme is a pre-eminent programme to rate the design, construction and operation of green buildings with points assigned in seven credit categories:

- Sustainable Sites (SS)
- Water Efficiency (WE)
- Energy & Atmosphere (EA)
- Materials & Resources (MR)
- Indoor Environmental Quality (IEQ)
- Innovation in Design (ID)
- Regional Priority (RP).

There are a number of different LEED® products.

While the strategies and categories assessed remain same, the point distribution varies to address different building types and application needs, for example according to New Construction, Schools, Core & Shell, Retail and Healthcare.

All programmes now use the same point scale:

110 Possible LEED® points

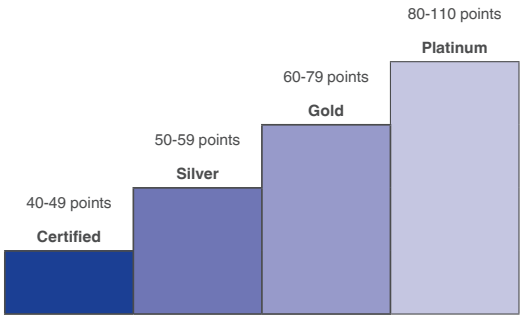

The majority of credits in LEED® rating systems are performance-based and achieving them is dependent on the impacts of each component or sub-system to the overall building.

While the LEED® green building certification programs do not certify products or services, the selection of the right products, systems or service programs is critical to obtain LEED® certification for a registered project, because the right products or service programmes can help meet the goals of green construction and ongoing operation and maintenance.

The choice of heating, ventilating and air conditioning (HVAC) products in particular can have a significant impact on LEED® certification, as the HVAC system directly impacts two categories that together influence 40% of the available points.

Overview of LEED® for new construction and major renovations

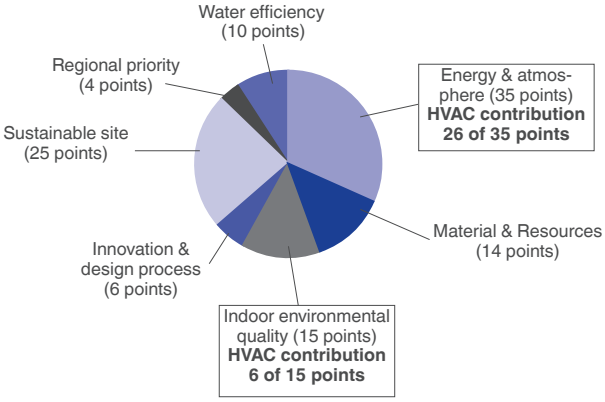

The new 30XAV units from Carrier can assist building owners to earn LEED® points in particular in the Energy & Atmosphere (EA) credit category and help address the following prerequisites and credit requirements:

- EA prerequisite 2: Minimum energy Performance
  The 30XAV exceeds the energy efficiency requirements of ASHRAE 90,1-2007; therefore it complies with the presequisite standard.
- EA prerequisite 3: Fundamental Refrigerant Management
  The 30XAV does not use chlorofluorocarbon (CFC) refrigerants thus satisfying the prerequisite statement.
- EA credit 1: Optimise energy performance (1 to 19 points)
  Points for this credit are assigned depending on the energy cost reduction virtually achievable by the new building, compared to ASHRAE 90,1-2007 reference. The 30XAV, which is designed for high performance especially during part load operation, contributes reducing the energy consumption of the building and therefore helps gaining points within this credit. In addition, the Carrier HAP (Hourly Analyses Program) can be used as an energy analyses program complying with the modeling requirements for this credit and produce reports that are easily transferable to LEED® templates.
- EA credit 4: Enhanced refrigerant management (2 points)
  With this credit, LEED® awards systems that minimise the Ozone Depletion Potential (ODP) and Globlal Warming Potential (GWP) of the system. The 30XAV uses a reduced R134a charge and therefore contributes toward satisfying this credit under LEED®.

Note: This section describes the prerequisites and credit requirements in LEED® for New Construction and is directly related to the 30XAV. Other prerequisites and credit requirements are not directly and purely related to the air-conditioning unit itself, but more to the control of the complete HVAC system.

i-Vu®, Carrier's open control system, has features that can be valuable for:

- EA prerequisite 1: Fundamental commissioning of energy management system
- EA credit 3: Enhanced commissioning (2 points)
- EA credit 5: Measurements and verification (3 points).

Note: Products are not reviewed or certified under LEED®. LEED® credit requirements cover the performance of materials in aggregate, not the performance of individual products or brands. For more information on LEED®, visit www.usgbc.org.

Inverter-driven Thunderbolt screw compressor

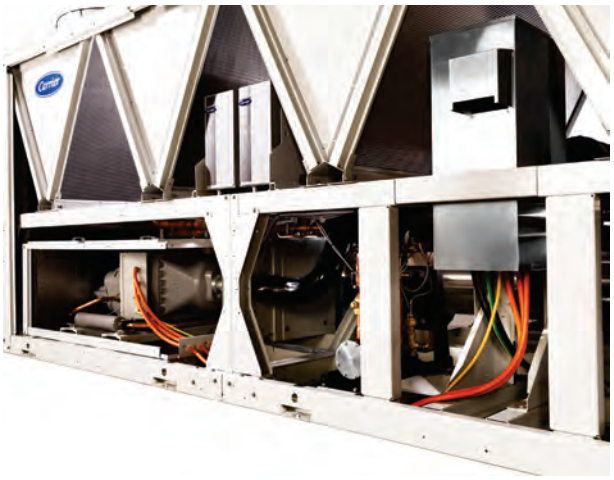

The new generation of Carrier inverter-driven screw compressors benefits for Carrier's long experience in the development of twin-rotor screw compressors. The design of the Thunderbolt compressors is based on the successful 06T screw compressor, core of the well-known AquaForce series.

- A dedicated oil separator is installed at the discharge of each compressor to ensure maximum oil return: Oil separates from refrigerant per gravity and returns to the low pression side of the compressor without use of additional pumps.
- Advanced control algorithms combine inverter frequency output with motor input logic to minimise mechanical part stress, resulting in best compression performance and high chiller reliability. The compressor is equipped with bearings with oversized rollers, oil pressure lubricated for reliable and durable operation, even at maximum load.

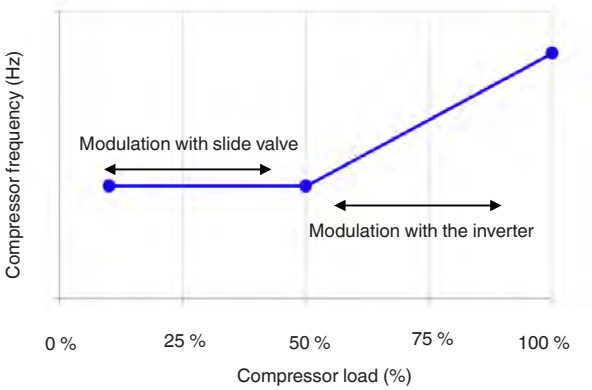

- Screw compressors use positive displacement principle to compress gases at higher pressure. As a result, in case of exceptional high temperature condenser side (due for example to coil fouling or operation in harsh climate) the compressor does not switch off, but continues operation at reduced capacity (unloaded mode).
- The silencer in the oil separator line (at the compressor outlet) considerably reduces discharge gas pulsations for much quieter operation.

Novation® Heat Exchangers with Microchannel Coil Technology

Already utilised in the automobile and aeronautical industries for many years, the Micro-Channel Heat Exchanger (MCHE) used in the AquaForce with Greenspeed® technology is entirely made of aluminum. This one-piece concept significantly increases its corrosion resistance by eliminating the galvanic currents that are created when two different metals (copper and aluminum) come into contact in traditional heat exchangers.

- From the energy efficiency point-of-view the Novation® heat exchangers are approximately 10% more efficient than traditional coils and micro-channel coil technology allows a 30% reduction in the amount of refrigerant used in the chiller.
- The low thickness of the MCHE reduces air pressure losses by 50% and makes it susceptible to very little fouling (e.g. by sand). Cleaning of the MCHE heat exchanger is very fast using a high pressure washer.
- To ensure constant level of performance during time and protect coils from early deterioration or, in worse case, refrigerant leaks, Carrier offers (as options) dedicated treatments for installations in corrosive environments.
  - The Novation® heat exchangers with Enviro-Shield protection (option 262) are recommended for installations in moderately corrosive environments. The Enviro-Shield protection utilises corrosion inhibitors which actively arrest oxidation in case of mechanical damage.
  - The Novation® heat exchangers with exclusive Super Enviro-Shield protection (option 263) are recommended for installations in corrosive environments. The Super Enviro-Shield protection consist in an extremely durable and flexible epoxy coating uniformly applied over all coil surfaces for complete isolation from the contaminated environment.

Controls

Touch Pilot control

- New innovative smart control features:
  - An intuitive and user-friendly, coloured, 7" interface
  - Direct access to the unit's technical drawings and the main service documents
  - Screen-shots with concise and clear information in local languages
  - Complete menu, customised for different users (end user, service personnel and Carrier-factory technicians)
  - Easy access to the controller box with inclined touch screen mounting to ensure legibility under any lighting conditions
  - Safe operation and unit setting: Password protection ensures that unauthorised people cannot modify any advanced parameters
  - Simple and "smart" intelligence uses data collection from the constant monitoring of all machine parameters to optimise unit operation
  - Night-mode: Cooling capacity management for reduced noise level.
- Energy management:
  - Internal time schedule clock controls chiller on/off times and operation at a second set-point
  - The DCT (Data Collection Tool) records the alarms history to simplify and facilitate service operations.

Remote management (standard)

- Units with Touch Pilot control can be easily accessed from the internet, using a PC with an Ethernet connection. This makes remote control quick and easy and offers significant advantages for service operations.
- AquaForce with Greenspeed® Intelligence is equipped with an RS485 serial port that offers multiple remote control, monitoring and diagnostic possibilities. When networked with other Carrier equipment through the CCN (Carrier Comfort Network - proprietary protocol), all components form a HVAC system fully-integrated and balanced through one of the Carrier's network system products, like the Chiller System Manager or the Plant System Manager (optional).
- The 30XAV also communicates with other building management systems via optional communication gateways.
- The following commands/visualisations are possible from remote connection:
  - Start/Stop of the machine
  - Dual set-point management: Through a dedicated contact is possible to activate a second set-point (example, unoccupied mode)
  - Demand limit setting: To limit the maximum chiller capacity to a predefined value
  - Water pump control: These outputs control the contactors of one/two evaporator water pumps.
  - Water pumps on reversal (only with options 116S/116U): These contacts are used to detect a water pump operation fault and automatically change over to the other pump.
  - Operation visualisation: Indication if the unit is operating or if it is in stand-by (no cooling load)
  - Alarm visualisation.

Operating range

Standard Unit 30XAV 500-1150

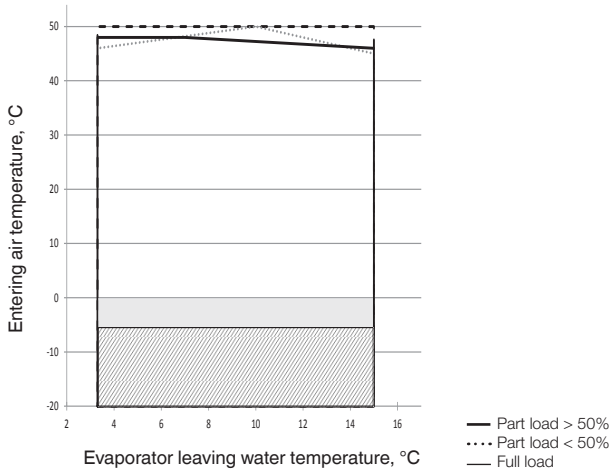

Notes:

- Evaporator ΔT = 5K.
- These ranges are given by way of indication. Verify the operating range from the Carrier electronic catalogue.

Legend

Operating range of standard unit 30XAV

Below 0 °C air temperature the unit must either be equipped with the evaporator frost protection option 41A, or the water loop must be protected against frost by using a frost protection solution (by the installer).

For start-ups with air temperature below -5 °C, the machine must be equipped with option 41A.

Hydronic module (options 116R, S, T, U)

Typical water circuit diagram

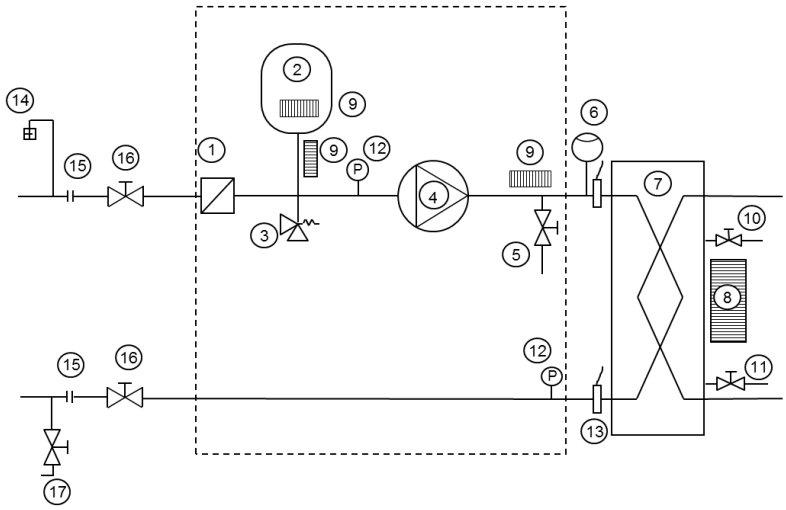

Legend

Components of unit and hydronic module

1. Victaulic screen filter
2. Expansion tank
3. Safety valve
4. Available pressure pump
5. Drain valve
6. Water flow control valve
7. Evaporator
8. Evaporator defrost heater (option)
9. Hydronic module defrost heater
10. Air vent (evaporator)
11. Water purge (evaporator)
12. Pressure sensor
13. Water temperature sensor

System components (field-supplied)

14. Air vent
15. Flexible connection
16. Shut-down valves
17. Charge valve

---- Hydronic module (option)

Available static pressure (options 116R, S, T, U)

Low-pressure pump (hydronic module option 116T/116U)

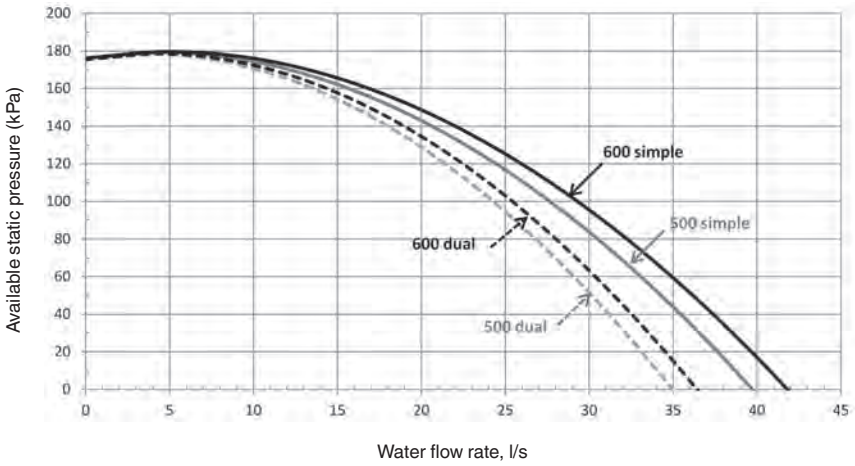

High-pressure pump (hydronic module option 116R/116S)

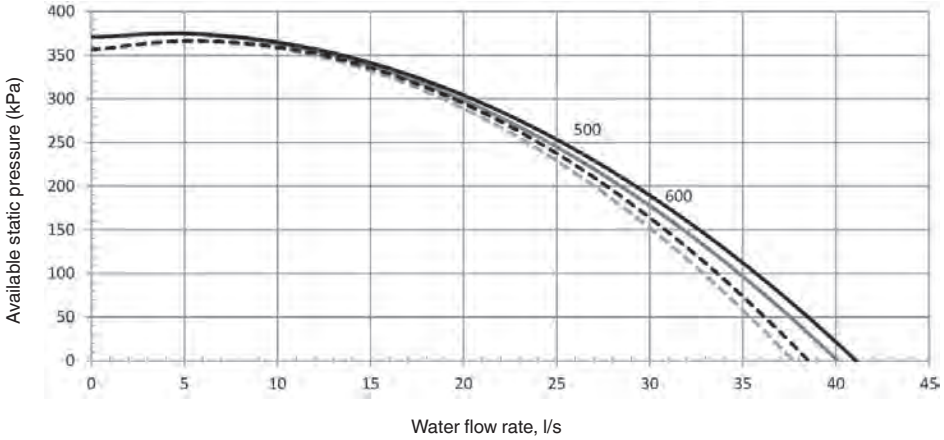

Dimensions/clearances

30XAV 500-600

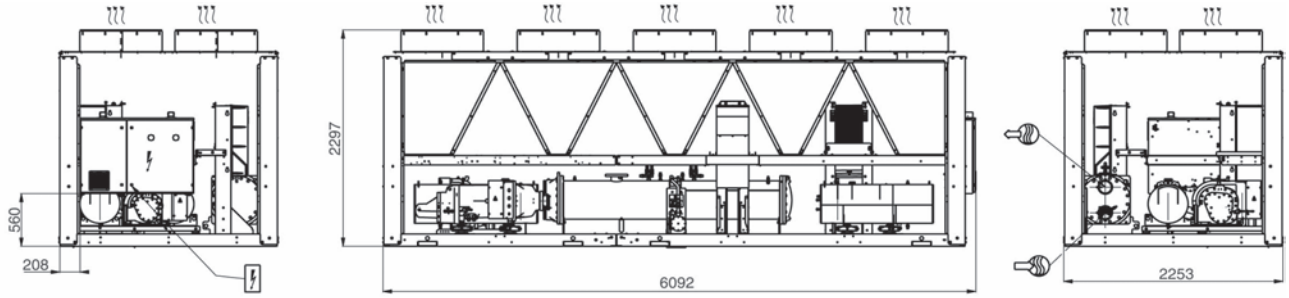

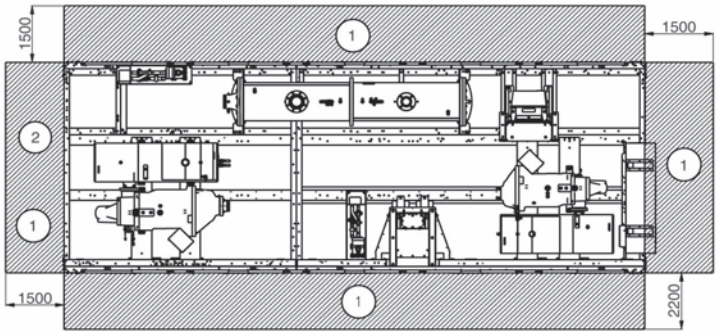

30XAV 700

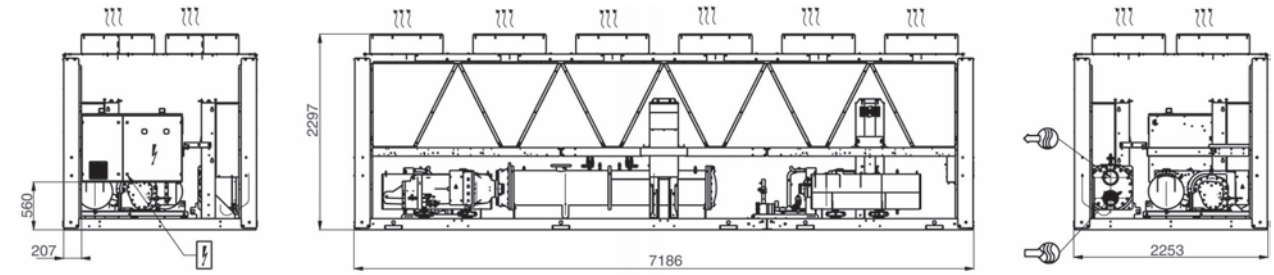

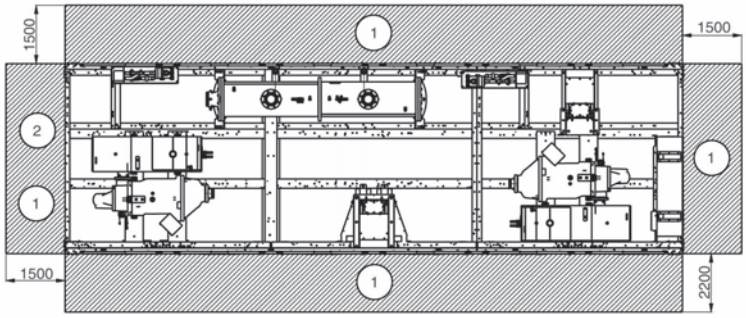

Notes:

- Drawings are not contractually binding.
- Before designing an installation, consult the certified dimensional drawings, available on request.
- If the installation includes several units or if this (these) is (are) close to walls, please refer to chapters 3.4 - "Multiple chiller installation" and 3.5 - "Distance to the wall" of the installation manual to determine the space required.

Legend

All dimensions are given in mm.

(1) Required clearances for maintenance (see note)

(2) Recommended space for evaporator tube removal

Water inlet for standard unit - for options 100C and 107 refer to the certified drawing.

Water outlet for standard unit - for options 100C and 107 refer to the certified drawing.

Air outlet – do not obstruct

Power supply and control connection

30XAV 800

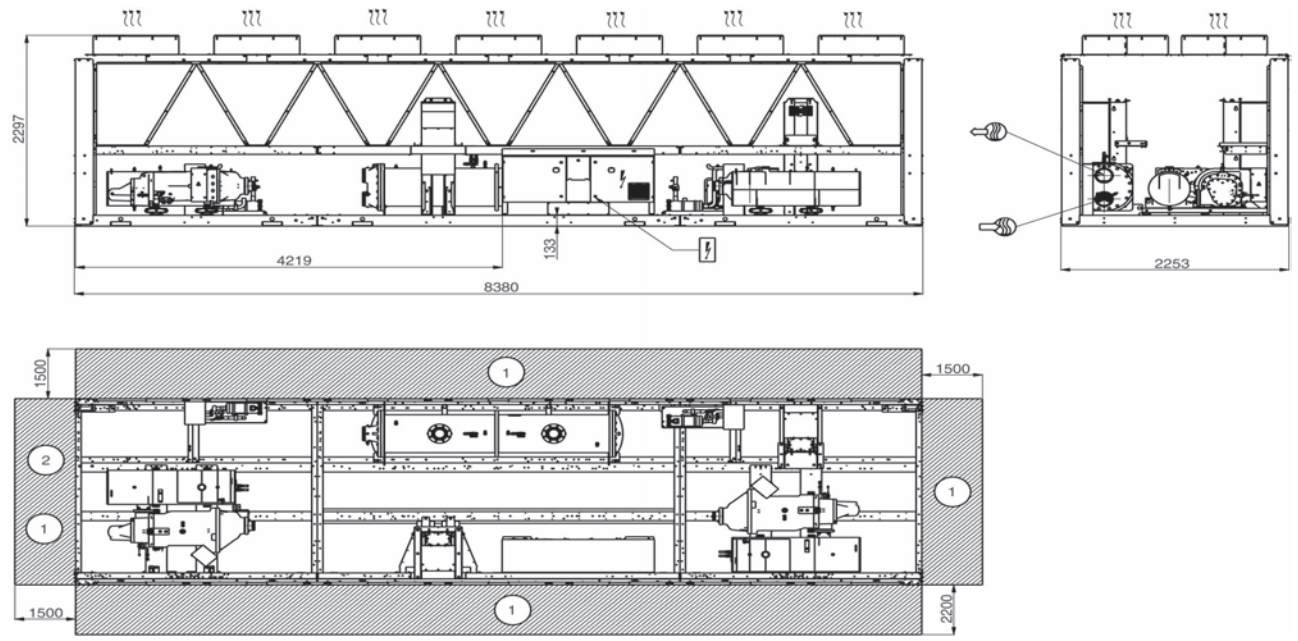

30XAV 950

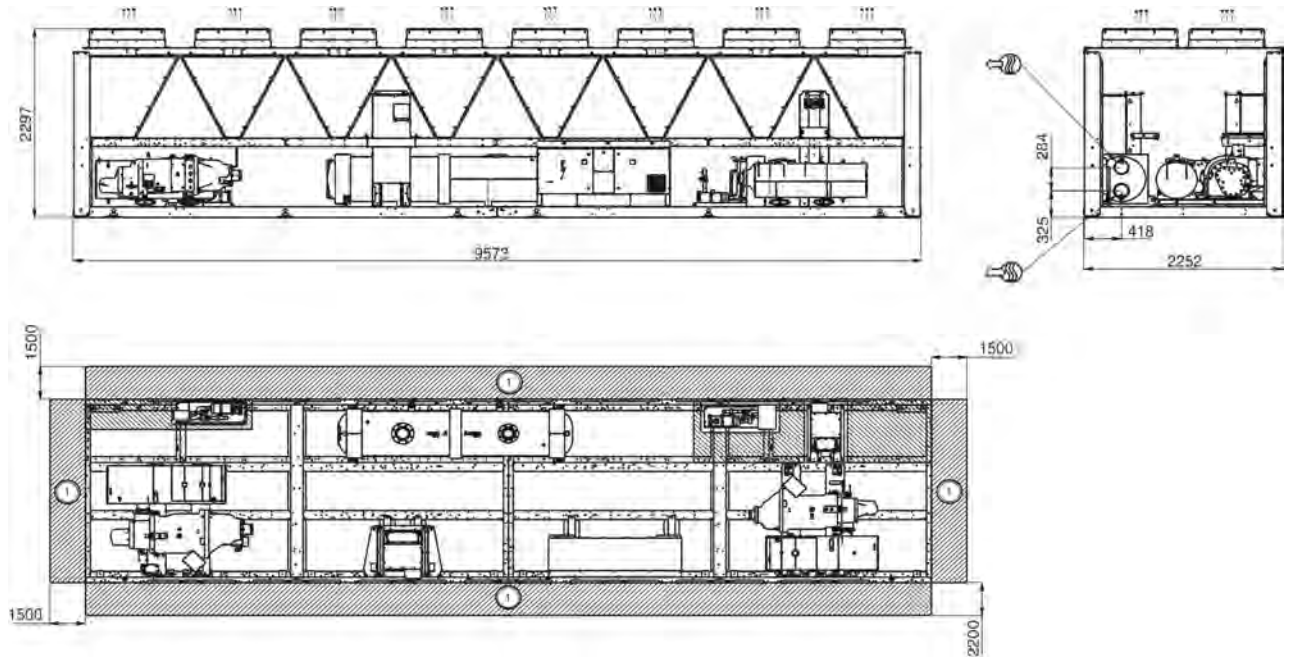

Notes:

- Drawings are not contractually binding.
- Before designing an installation, consult the certified dimensional drawings, available on request.
- If the installation includes several units or if this (these) is (are) close to walls, please refer to chapters 3.4 - "Multiple chiller installation" and 3.5 - "Distance to the wall" of the installation manual to determine the space required.

Legend

All dimensions are given in mm.

1 Required clearances for maintenance (see note)

2 Recommended space for evaporator tube removal

Water inlet for standard unit - for options 100C and 107 refer to the certified drawing.

Water outlet for standard unit - for options 100C and 107 refer to the certified drawing.

Air outlet – do not obstruct

Power supply and control connection

30XAV 1050

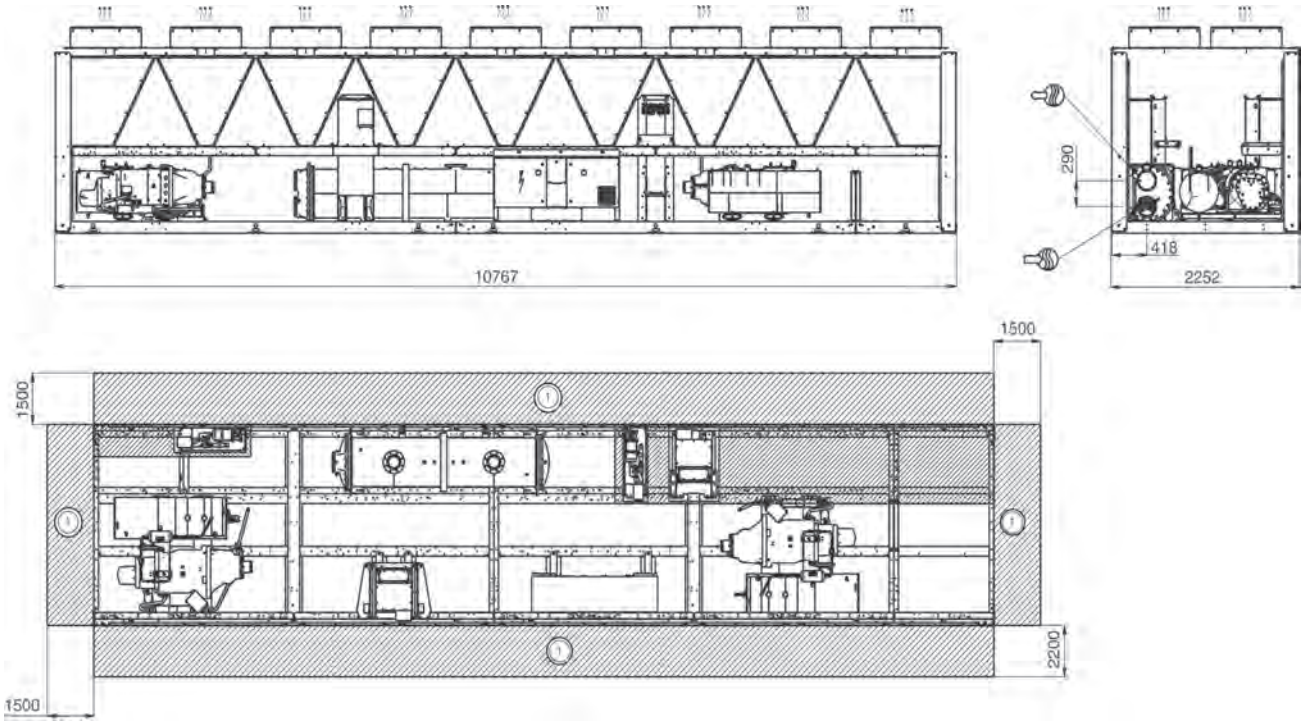

30XAV 1150

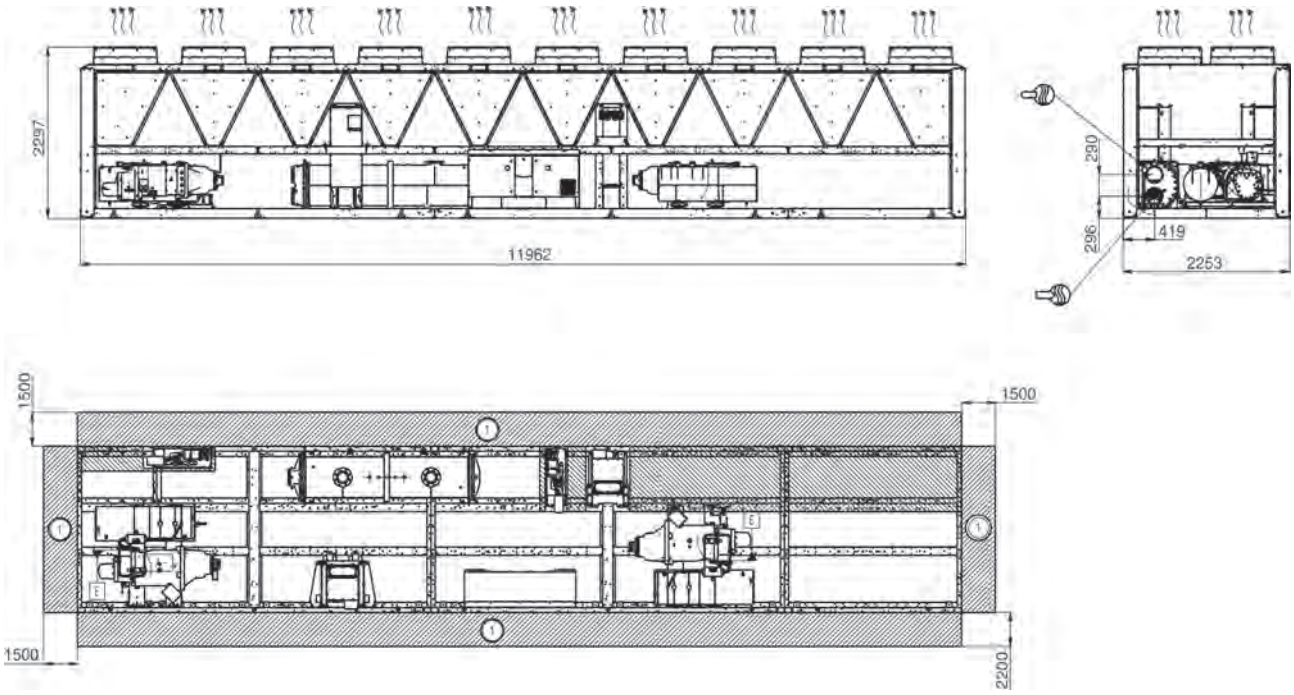

Notes:

- Drawings are not contractually binding.
- Before designing an installation, consult the certified dimensional drawings, available on request.
- If the installation includes several units or if this (these) is (are) close to walls, please refer to chapters 3.4 - "Multiple chiller installation" and 3.5 - "Distance to the wall" of the installation manual to determine the space required.

Legend

All dimensions are given in mm.

(1) Required clearances for maintenance (see note)

(2) Recommended space for evaporator tube removal

Water inlet for standard unit - for options 100C and 107 refer to the certified drawing.

Water outlet for standard unit - for options 100C and 107 refer to the certified drawing.

Air outlet – do not obstruct

Power supply and control connection

COOLING

30XA-ZE

NEW

Nominal cooling capacity 300 - 1100 kW

30XAV-ZE

Nominal cooling capacity 400 - 900 kW

AQUAFORCE PUREtec

Carrier at the forefront of innovative technology

HFO R-1234ze

Long-term refrigerant choice

Nearly zero global warming potential

Zero impact on the ozone layer

Support HFC phase-down plan in Europe

Carrier has been working over the past years on selecting the right refrigerant for the future and has now taken the lead in introducing the next generation of refrigerants on screw units : PUREtec™. With PUREtec, Carrier offers a range of new customized solutions using a refrigerant with zero impact on the ozone layer and nearly zero global warming potential: HFO R-1234ze.

All the reliability, efficiency, adaptability of the AquaForce range combined with PUREtec refrigerant: HFO R-1234ze.

PUREtec

Physical data

All performances are compliant with EN14511 3 : 2013. Sound power level according to ISO9614 1.
Preliminary engineering data

30XAV-ZE			30XAVZE0401	30XAVZE0501	30XAVZE0551	30XAVZE0651
Cooling						
Performance Information						
Cooling Capacity*		kW	390	469	531	621
Cooling Efficiency	EER	kW/kW	3,38	3,39	3,46	3,44
Seasonal Efficiency	ESEER	kW/kW	4,82	4,90	5,03	5,15
Number of Refrigerant Circuit		--	2	2	2	2
Operating/Shipping Weight		kg	4832/4757	5220/5130	5723/5633	6380/6270
Unit Dimensions	LxWxH	mm	6092/2253/2297	6092/2253/2297	7186/2253/2297	8380/2253/2297
Electrical Information						
Unit Voltage:		V-Ph-Hz	400(+/-10%)-3-50	400(+/-10%)-3-50	400(+/-10%)-3-50	400(+/-10%)-3-50
Standby Power:		kW	0,15	0,15	0,15	0,15
Power Factor:		--	0,92	0,92	0,92	0,93
Amps (Un)						
Circuit 1						
Maximum Current		A	264	300	344	218
Start Up Current		A	<RLA	<RLA	<RLA	<RLA
Current at Eurovent Conditions		A	197	232	262	165
Circuit 2						
Maximum Current		A	--	--	--	218
Start Up Current		A	--	--	--	<RLA
Current at Eurovent Conditions		A	--	--	--	165

* Cooling mode conditions: Water heat exchanger, entering/leaving water temperature 12°C/7°C, fouling factor 0 m² K/W. Outside air temperature 35°C.

30XAV-ZE			30XAVZE0701	30XAVZE0851	30XAVZE0901
Cooling					
Performance Information					
Cooling Capacity*		kW	703	804	879
Cooling Efficiency	EER	kW/kW	3,28	3,24	3,26
Seasonal Efficiency	ESEER	kW/kW	4,96	4,91	5,08
Number of Refrigerant Circuit		--	2	2	2
Operating/Shipping Weight		kg	6806/6686	7687/7553	8076/7930
Unit Dimensions	LxWxH	mm	9573/2253/2297	10767/2253/2297	11962/2253/2297
Electrical Information					
Unit Voltage:		V-Ph-Hz	400(+/-10%)-3-50	400(+/-10%)-3-50	400(+/-10%)-3-50
Standby Power:		kW	0,15	0,15	0,15
Power Factor:		--	0,92	0,92	0,92
Amps (Un)					
Circuit 1					
Maximum Current		A	272	272	302
Start Up Current		A	<RLA	<RLA	<RLA
Current at Eurovent Conditions		A	199	199	222
Circuit 2					
Maximum Current		A	218	272	302
Start Up Current		A	<RLA	<RLA	<RLA
Current at Eurovent Conditions		A	165	199	222

* Cooling mode conditions: Water heat exchanger, entering/leaving water temperature 12°C/7°C, fouling factor 0 m² K/W. Outside air temperature 35°C.

Preliminary product data for information only. Final product data will be submitted by Carrier to Eurovent company during 2016.
Physical data for 30XA-ZE will be available after official product launch.
Please contact your sales representative for more information.

PRELIMINARY DATA
PRELIMINARY DATA

30WG/30WGA

Nominal cooling capacity 25-95 kW

COOLING

AQUASNAP®

30WG optimized for cooling

Compact design

Plug and play approach

High efficiency Original

The 30WG/30WGA units are Carrier chillers designed for commercial (offices, small hotels, leisure facilities), residential and industrial applications. All units offer a unique combination of high performance and functionality in an exceptionally compact chassis.

The 30WG, also available as a condenserless version (30WGA), is designed for air-conditioning applications with a high ESEER value. As they can produce chilled water down to -12 °C they are also suitable for process applications.

A large number of options is available for the whole range:

- Hydronic kits with or without variable water flow rate,
- Reinforced sound insulation,
- Stacking and connection of two units
- Low-temperature applications down to -12 °C (30WG only).

Physical data

EUROVENT CERTIFIED PERFORMANCE
www.eurovent-certification.com

30WG				020	025	030	035	040	045	050	060	070	080	090
Cooling														
Standard Unit	C1	Nominal capacity	kW	24.6	28.7	31.5	36.7	41.8	46.6	58.1	63.4	73.8	83.9	94.6
Full load performances*	C1	EER	kW/ kW	4.72	4.72	4.69	4.73	4.69	4.72	4.72	4.65	4.69	4.65	4.68
	C1	Eurovent class cooling		B	B	B	B	B	B	B	B	B	B	B
	C2	Nominal capacity	kW	33.9	39.3	43.0	50.1	56.6	65.6	78.6	86.0	101.7	113.2	129.4
	C2	EER	kW/ kW	6.42	6.10	6.03	6.04	5.90	6.06	6.12	5.95	6.19	5.93	6.13
	C2	Eurovent class cooling		A	A	A	A	A	A	A	A	A	A	A
Full load performances**	C1	Gross nominal capacity	kW	24.7	28.8	31.6	36.9	42.0	46.8	58.3	63.5	74.0	84.1	94.8
	C1	Gross EER	kW/kW	4.93	4.94	4.93	4.96	4.93	4.96	4.90	4.82	4.88	4.84	4.87
	C2	Gross nominal capacity	kW	34.1	39.5	43.3	50.4	56.9	66.0	78.8	86.3	102.1	113.6	129.9
	C2	Gross EER	kW/kW	6.91	6.56	6.52	6.53	6.37	6.59	6.49	6.31	6.62	6.35	6.57
Seasonal efficiency*	C1	ESEER	kW/kW	5.10	5.09	5.03	5.05	5.03	5.07	5.83	5.90	5.79	5.99	5.93
Seasonal efficiency**	C1	Gross ESEER	kW/kW	5.35	5.35	5.30	5.32	5.32	5.36	6.31	6.38	6.30	6.54	6.44
Seasonal efficiency***	H1	SCOP	kW/kW	4.60	4.58	4.56	4.58	4.56	4.55	5.24	5.27	5.17	5.23	5.15
	H1	ηs heat	%	176	175	174	175	175	174	202	203	199	201	198
	H1	Prated	kW	38	45	49	57	66	73	91	99	116	132	148
Operating weight(1)**			kg	191	200	200	207	212	220	386	392	403	413	441
Sound levels(2)**														
Sound power level			dB(A)	67.0	68.5	69.0	69.3	70.0	70.1	71.5	72.0	72.0	73.0	73.4
Sound power level with option 258			dB(A)	61.0	62.5	63.0	63.3	64.0	64.1	65.5	66.0	66.0	67.0	67.4
dimensions, standard unit(3)**														
Width			mm	600	600	600	600	600	600	880	880	880	880	880
Length			mm	1044	1044	1044	1044	1044	1044	1474	1474	1474	1474	1474
Height			mm	901	901	901	901	901	901	901	901	901	901	901
Compressors				Hermetic scroll 48.3 r/s										
Quantity				1	1	1	1	1	1	2	2	2	2	2
Number of capacity stages				1	1	1	1	1	1	2	2	2	2	2
Minimum capacity			%	100	100	100	100	100	100	50	50	50	50	50
Refrigerant(1)**				R410A										
Charge			kg	3.5	3.5	3.6	3.7	4.0	4.6	7.6	7.8	7.9	8.7	11.5
			teqCO_2	7.2	7.3	7.4	7.6	8.2	9.5	15.9	16.3	16.5	18.2	24
Capacity control				Pro-Dialog+										
Evaporator				Direct-expansion plate heat exchanger										
Water volume			l	3.3	3.6	3.6	4.2	4.6	5.0	8.4	9.2	9.6	10.4	12.5
Water connections				Victaulic										
Inlet/outlet			in	1.5	1.5	1.5	1.5	1.5	1.5	2	2	2	2	2
Max. water-side operating pressure			kPa	1000	1000	1000	1000	1000	1000	1000	1000	1000	1000	1000
Condenser				Plate heat exchanger										
Net water volume			l	3.3	3.6	3.6	4.2	4.6	5.0	8.4	9.2	9.6	10.4	12.5
Water connections				Victaulic										
Inlet/outlet			in	1.5	1.5	1.5	1.5	1.5	1.5	2	2	2	2	2
Max. water-side operating pressure			kPa	1000	1000	1000	1000	1000	1000	1000	1000	1000	1000	1000
chassis paint colour				Colour code: RAL7035										

* In accordance with standard EN14511-3:2013
** Not in accordance with standard EN14511-3:2013.These performances do not take into account the correction for the proportionnal heating capacity and power input generated by the water pump to overcome the internal pressure drop in the heat exchanger.
*** In accordance with standard EN14825:2013, average climate
C1 Cooling mode conditions: evaporator water entering/leaving temperature 12°C/7°C, condenser entering/leaving water temperature 30°C/35°C, evaporator and condenser fouling factor 0 (m2k) / W
C2 Cooling mode conditions: evaporator water entering/leaving temperature 18°C/23°C, condenser entering/leaving water temperature 30°C/35°C, evaporator and condenser fouling factor 0 (m2k) / W
H1 Heating mode conditions: evaporator entering/leaving water temperature 10 °C/7 °C, condenser entering/leaving water temperature 30 °C/35 °C, evaporator and condenser fouling factor 0 m2 K/W.
(1) Weight shown is a guideline only. Please refer to the unit nameplate
(2) In dB ref=10-12 W, (A) weighting. Declared dualnumber noise emission values in accordance with ISO 4871 (with an associated uncertainty of +/-3dB(A)). Measured in accordance with ISO 9614-1 and certified by Eurovent.
(3) The dimensions shown are for the standard unit. For other unit types please refer to the dimensional drawings.

Eurovent certified data

Physical data

30WGA				020	025	030	035	040	045	050	060	070	080	090
Cooling														
Standard Unit	C1	Nominal capacity	kW	22.6	27.0	29.5	34.7	39.2	43.7	53.7	59.8	69.2	78.3	87.8
Full load performances*	C1	EER	kW/ kW	3.75	3.84	3.87	3.93	3.94	3.90	3.82	3.85	3.86	3.91	3.88
	C1	Eurovent class cooling		32.1	38.1	41.9	48.9	55.2	63.1	75.9	83.9	98.1	110.5	124.6
	C2	Nominal capacity	kW	5.51	5.36	5.44	5.51	5.44	5.53	5.36	5.37	5.45	5.42	5.42
	C2	EER	kW/ kW	6.42	6.10	6.03	6.04	5.90	6.06	6.12	5.95	6.19	5.93	6.13
	C2	Eurovent class cooling		A	A	A	A	A	A	A	A	A	A	A
Full load performances**	C1	Gross nominal capacity	kW	22.7	27.1	29.6	34.8	39.4	43.8	53.8	59.9	69.4	78.4	88.0
	C1	Gross EER	kW/kW	3.80	3.91	3.94	4.00	4.02	3.98	3.86	3.89	3.91	3.95	3.93
	C2	Gross nominal capacity	kW	32.2	38.3	42.1	49.2	55.5	63.5	76.2	84.1	98.4	110.9	125.0
	C2	Gross EER	kW/kW	5.67	5.52	5.62	5.69	5.63	5.72	5.47	5.48	5.58	5.55	5.54
Operating weight[1]			kg	164	171	171	177	180	185	321	324	332	339	354
Sound levels[2]														
Sound power level			dB(A)	67.0	68.5	69.0	69.3	70.0	70.1	71.5	72.0	72.0	73.0	73.4
Sound power level with option 258			dB(A)	61.0	62.5	63.0	63.3	64.0	64.1	65.5	66.0	66.0	67.0	67.4
dimensions, standard unit[3]														
Width			mm	600	600	600	600	600	600	880	880	880	880	880
Length			mm	1044	1044	1044	1044	1044	1044	1474	1474	1474	1474	1474
Height			mm	901	901	901	901	901	901	901	901	901	901	901
Compressors				Hermetic scroll 48.3 r/s										
Circuit A				1	1	1	1	1	1	2	2	2	2	2
Circuit B				-	-	-	-	-	-	-	-	-	-	-
Number of capacity stages				1	1	1	1	1	1	2	2	2	2	2
Minimum capacity			%	100	100	100	100	100	100	50	50	50	50	50
Refrigerant[1]				R410A										
Capacity control				Pro-Dialog+										
Evaporator				Direct-expansion plate heat exchanger										
Water volume			l	3.3	3.6	3.6	4.2	4.6	5.0	8.4	9.2	9.6	10.4	12.5
Water connections				Victaulic										
Inlet/outlet			in	1.5	1.5	1.5	1.5	1.5	1.5	2	2	2	2	2
Max. water-side operating pressure without hydronic module			kPa	1000	1000	1000	1000	1000	1000	1000	1000	1000	1000	1000
Refrigerant connections														
Inlet/outlet			in	7/8	7/8	7/8	7/8	7/8	7/8	1-1/8	1-1/8	1-1/8	1-1/8	1-1/8
Max. water-side operating pressure			in	5/8	5/8	5/8	5/8	5/8	5/8	7/8	7/8	7/8	7/8	7/8
chassis paint colour				Colour code: RAL7035										

* In accordance with standard EN14511-3:2013. Refrigerant piping equivalent length (without drier and valves) = 3 m.
** Not in accordance with standard EN14511-3:2013.These performances do not take into account the correction for the proportionnal heating capacity and power input generated by the water pump to overcome the internal pressure drop in the heat exchanger. Refrigerant piping equivalent length (without drier and valves) = 3 m
C1 Cooling mode conditions: evaporator entering/leaving water temperature 12 °C/7 °C, saturated condensing temperature 45 °C, subcooling 5 K, evaporator fouling factor 0 m2 K/W.
C2 Cooling mode conditions: evaporator entering/leaving water temperature 23 °C/18 °C, saturated condensing temperature 45 °C, subcooling 5 K, evaporator fouling factor 0 m2 K/W.
(1) Weight shown is a guideline only. Please refer to the unit nameplate
(2) In dB ref=10-12 W, (A) weighting. Declared dualnumber noise emission values in accordance with ISO 4871 (with an associated uncertainty of +/-3dB(A)). Measured in accordance with ISO 9614-1 and certified by Eurovent.
(3) The dimensions shown are for the standard unit. For other unit types please refer to the dimensional drawings.

Electrical data

30WG/30WGA		020	025	030	035	040	045	050	060	070	080	090
Power circuit												
Nominal voltage	V-ph-Hz	400-3-50 ± 10%										
Control circuit supply		24 V via internal transformer										
Maximum start-up current draw (Un)*												
Standard unit, 30WG	A	98	142	142	147	158	197	163	165	174	188	233
Standard unit, 30WGA	A	98	142	142	147	158	197	160.7	161.8	170.2	183.4	226
Unit with electronic starter option, 30WG	A	53.9	78.1	78.1	80.9	86.9	108.4	100.1	102.1	108.9	117.9	144.4
Unit with electronic starter option, 30WGA	A	53.9	78.1	78.1	80.9	86.9	108.4	96.8	97.9	104.1	112.3	137.4
Maximum operating power input, 30WG**	kW	9.1	10.7	11.7	13.6	15	17	21.4	23.4	27.2	30	34
Maximum operating power input, 30WGA**	kW	8.7	10.2	11.3	12.5	14.2	16.1	20.4	22.6	25.0	28.5	32.2
Maximum operating current draw (Un), 30WG***	A	15.6	18.7	19.8	23.2	25.4	29	37.4	39.6	46.4	50.8	58
Maximum operating current draw (Un), 30WGA***	A	14.7	17.7	19.3	21.7	24.1	27.5	35.4	38.7	43.5	48.1	55.0

* Maximum instantaneous start-up current at operating limit values (maximum operating current of the smallest compressor(s) + fan current + locked rotor current of the largest compressor).
** Maximum power input at the unit operating limits.
*** Maximum unit operating current at maximum unit power input and 400 V.

Options

Options	No.	Description	Advantages	Use 30WG/30WGA
Low-temperature brine solution	6	Low temperature glycol solution production down to -12 °C with ethylene glycol	Covers specific applications such as ice storage and industrial processe	30WG 020-090
Soft starter	25	Electronic compressor starter	Reduced compressor start-up current	30WG 020-090 30WGA 020-090
Master/slave operation	58	Unit equipped with an additional field-installed leaving water temperature sensor, allowing master/slave operation of two units connected in parallel.	Optimised operation of two units connected in parallel with operating time equalisation	30WG 020-090 30WGA 020-090
External disconnect handle	70F	The handle of the electrical disconnect switch is on the outside of the unit	Quick access to the unit disconnect switch	30WG 020-090 30WGA 020-090
Condenser insulation	86	Thermal condenser insulation	Optimisation for heating applications	30WG 020-090
LP single-pump, evap. side	116T	Evaporator hydronic module equipped with low pressure fixed-speed pump, drain valve, air vent and pressure sensors. Select option 293 for built-in safety hydraulic components.	Easy and fast installation	30WG 020-090 30WGA 020-090
HP variable-speed single-pump, evap. side	116V	Evaporator hydronic module equipped with high-pressure variable-speed pump, drain valve, air vent and pressure sensors. Select option 293 for built-in safety hydraulic components.	Easy and fast installation, reduced power consumption of the pump	30WG 020-090 30WGA 020-090
JBus gateway	148B	Two-directional communications board, complies with JBus protocol	Easy connection by communication bus to a building management system	30WG 020-090 30WGA 020-090
BacNet gateway	148C	Two-directional communications board, complies with BacNet protocol	Easy connection by communication bus to a building management system	30WG 020-090 30WGA 020-090
LON gateway	148D	Two-directional communications board, complies with Lon Talk protocol	Easy connection by communication bus to a building management system	30WG 020-090 30WGA 020-090
Low sound level	257	Compressor sound enclosure and sound insulation of main noise sources	Reduced sound emissions	30WG 020-090 30WGA 020-090
Very low sound level	258	Enhanced sound insulation of main noise sources	Reduced sound emissions	30WG 020-090 30WGA 020-090
Evaporator screw connection sleeves	264	Evaporator inlet/outlet screw connection sleeves	Allows unit connection to a screw connector	30WG 020-090 30WGA 020-090
Condenser screw connection sleeves	265	Condenser inlet/outlet screw connection sleeves	Allows unit connection to a screw connector	30WG 020-090
Welded evaporator connection sleeves	266	Welded evaporator inlet/outlet connection sleeves	Allows welding of customer connections to the unit	30WG 020-090 30WGA 020-090
Welded condenser connection sleeves	267	Welded condenser inlet/outlet connection sleeves	Allows welding of customer connections to the unit	30WG 020-090
LP single-pump, cond.side	270T	Condenser hydronic module equipped with low pressure fixed-speed pump, drain valve, air vent and pressure sensors. Select option 293A for built-in safety hydraulic components.	Easy and fast installation	30WG 020-090
HP variable-speed single-pump, cond. side	270V	Condenser hydronic module equipped with high-pressure variable-speed pump, drain valve, air vent and pressure sensors. Select option 293A for built-in safety hydraulic components.	Easy and fast installation, reduced power consumption of the pump	30WG 020-090
Unit stackable for operation	273	Unit stackable for operation	Reduced footprint size	30WG 020-090 30WGA 020-090
Customer water connection at the top of the unit	274	Customer water connection at the top of the unit	Reduced footprint size	30WG 020-090
Remote user interface	275	User interface for remote installation	Remote control of the unit and its operating parameters	30WG 020-090 30WGA 020-090
Filter drier with replaceable solid core	277	Filter the fine particles and eliminates humidity	Maintains the refrigerated circuit without humidity	30WGA 020-090
Safety hydraulic components, evap. side	293	Screen filter, expansion tank and safety valve integrated in the evaporator hydronic module	Easy and fast installation, operating safety	30WG 020-090 30WGA 020-090
Safety hydraulic components, cond. side	293A	Screen filter, expansion tank and safety valve integrated in the evaporator hydronic module	Easy and fast installation, operating safety	30WG 020-090

Features and advantages

- Reduced footprint
- Scroll compressors and R-410A refrigerant
- Variable-flow pump
- Low-noise option (-3 dB(A))
- Stacking of two units for increased capacity
- Several communication protocols available: JBus, BacNet, MS/TP, LON
- Water connection at the top or rear (30WG only)

Available versions

30WG - optimised for air conditioning and process cooling

- Evaporator temperature down to -12 °C
- Condenser temperature up to +60 °C
- Condensing pressure control devices available

30WGA - optimised for air conditioning

- Continuous operation up to 62 °C saturated condensing temperature
- Compatible remote condensers available
- Optimised remote condenser fan control

The right unit for any application

- In 30WG units the pressure control signal ensures safe unit operation and maximised performance at low source-side water temperatures.
- The condenserless 30WGA units are ideal for refurbishment projects where a remote condenser exists on site, and for all projects without geothermal/natural sinks for heat rejection.

Adaptability and simple installation

- The 30WG units can be provided with several hydronic kit options, both on the evaporator and/or condenser side, with different levels of available pressure and variable or fixed-speed pumps (see page 7).
- Remote condenser fan control possible for 30WGA units.

Water connections at the rear of the unit

Water connections at the top of the unit

A compact high-performance product range

- Small footprint, ideal for refurbished buildings, allows access in very tight plant rooms.
- 30WG: The ESEER of over 5.5 for dual-compressor units - one of the highest in its category.
- The 30WGA is based on the 30WG design to ensure efficient operation for applications with remote air-cooled condensers.
- Variable-flow pumps reduce system energy consumption.
- The entire range offers low sound levels, allowing installation in any building type. The low-noise option ensures enhanced acoustic comfort (-3 dB(A)).
- 30WG/30WGA units are equipped with the latest generation R410A scroll compressor, optimised for typical operating conditions for water-sourced units.

Component acessibility

See photos below.

Access to scroll compressors

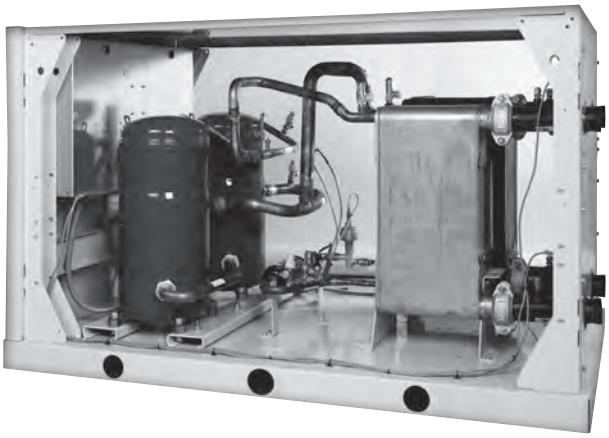

Access to control panel

Two-unit stacking option for reduced footprint

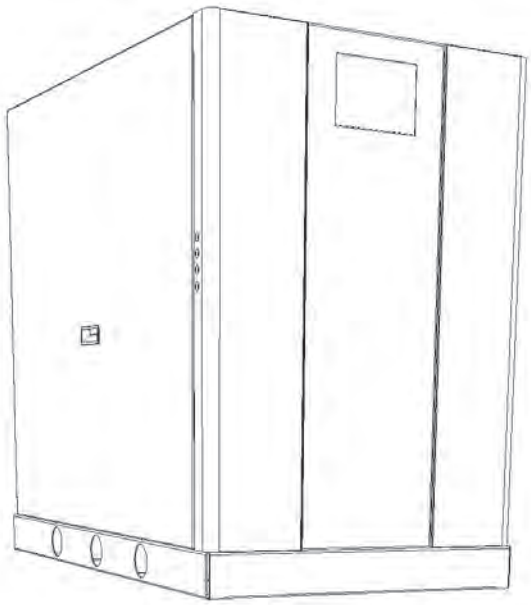

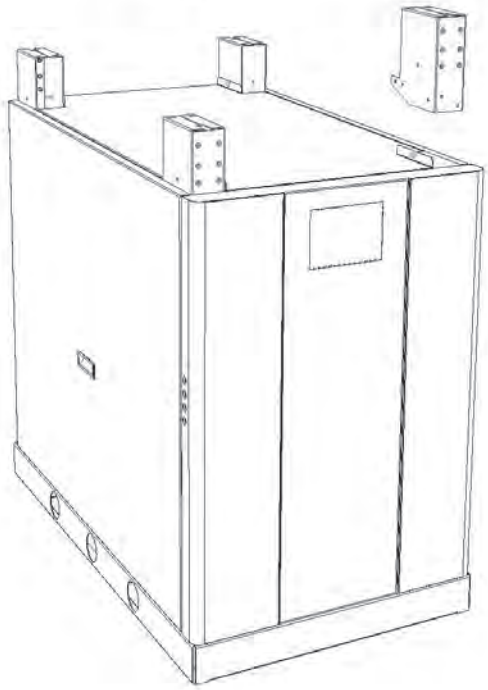

30WG/30WGA units compatible the Carrier 09 series drycoolers/ remote condensers

The Carrier 09 series drycoolers and remote condensers are compatible with the 30WG and 30WGA units.

A dedicated control board for installation in the drycooler/ remote condenser control box is available as an option (option 154). It controls the fans via digital or analogue outputs, depending the fan motor used.

Control board algorithms optimise energy consumption based on:

- The outside temperature and chilled-water temperature read for drycoolers
- The outside temperature and saturated refrigerant discharge temperature read for remote condensers.

A simple communication bus is required downstream to connect the control board to the unit control.

As all control components are installed and tested in the factory, installation and start-up of the unit and its associated drycooler/remote condenser are simplified.

30WG system concept

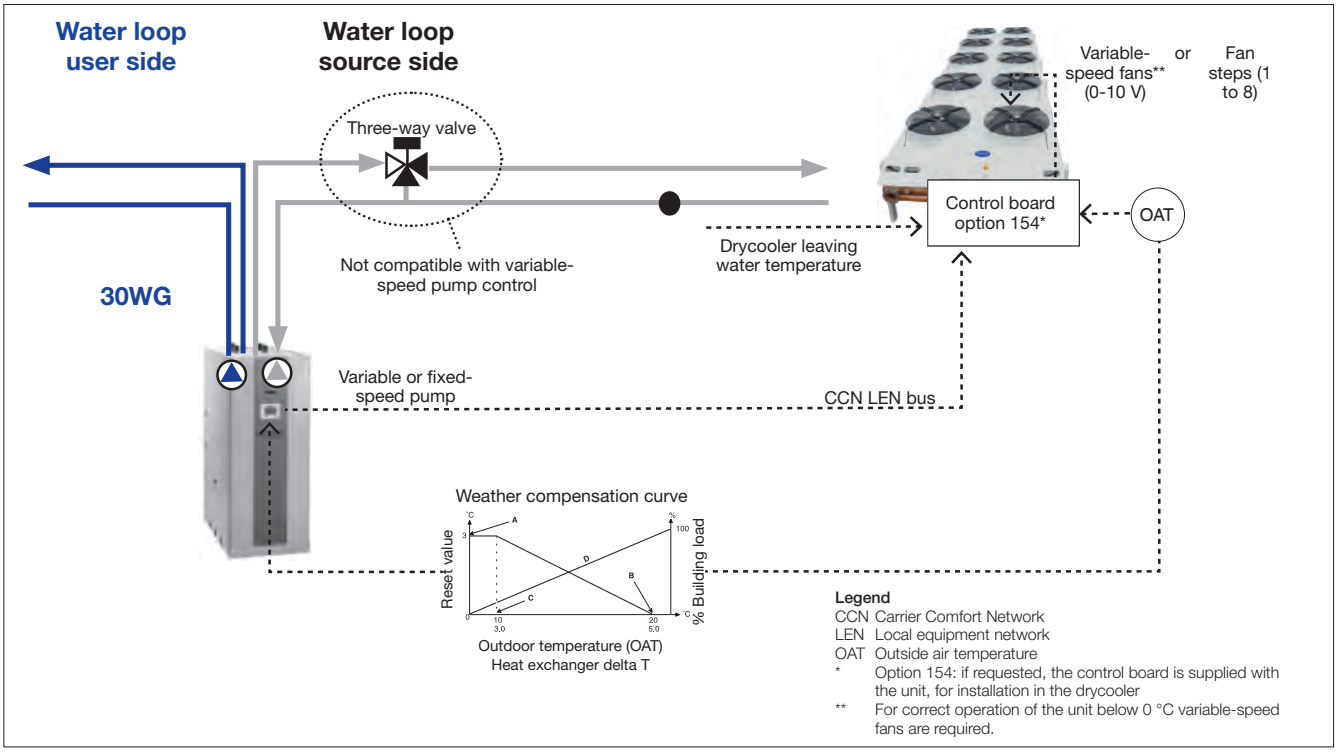

30WGA system concept

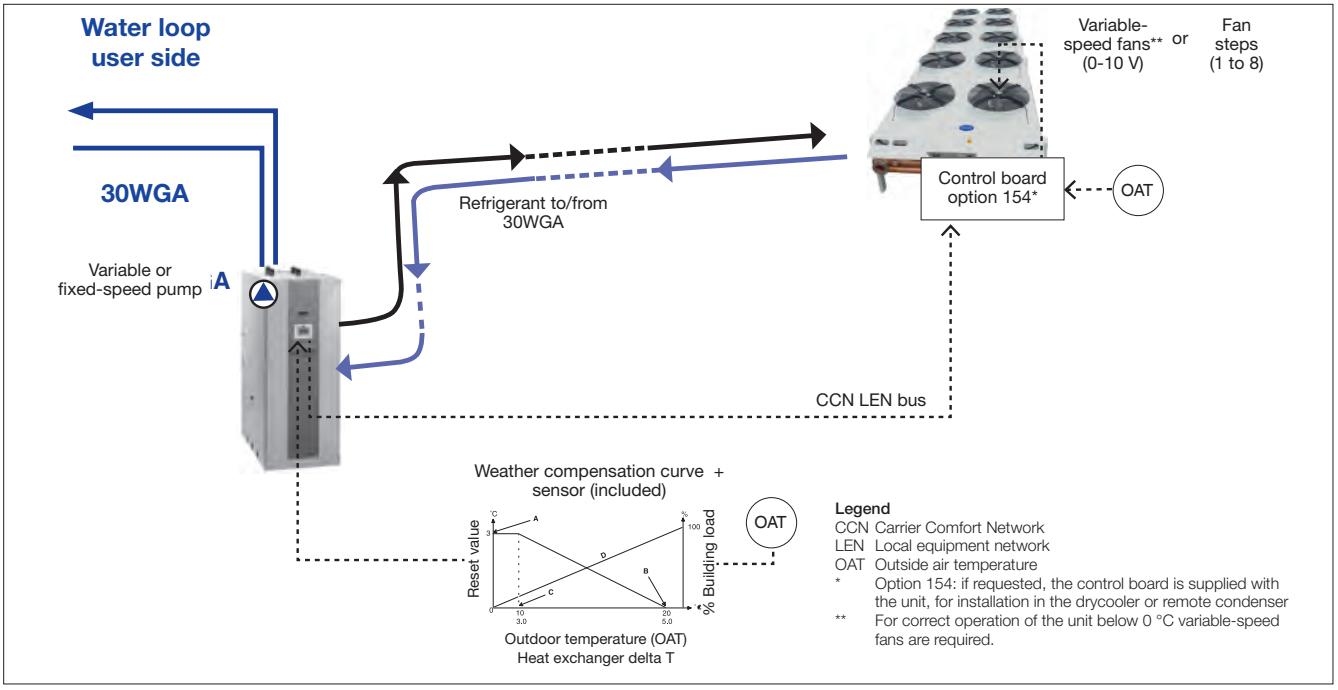

Controls

Pro-Dialog+ control

Pro-Dialog+ is a numerical control that combines intelligence with operating simplicity. Depending on the options used, the unit manages the operation of compressors, evaporaor and condenser water pumps and fans (drycooler).

- Optimised energy management
  - A patented auto-adaptive algorithm optimises the condensing pressure at part load to reduce compressor load and ensure perfect supply for the evaporator with liquid refrigerant. The algorithm controls the operation of the variable-speed condenser water pump and the fans (drycooler)
  - Pro-Dialog+ automatically resets the chilled-water temperature setpoint based on the outside air temperature or the return water temperature. The control can also operate on a second setpoint (example: unoccupied mode).

Pro-Dialog+ interface

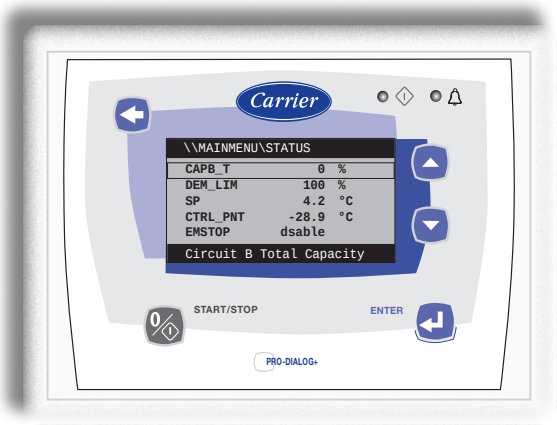

- Total unit protection
  - A patented auto-adaptive algorithm controls compressor operation and permanently adapts to the system charac-teristics (water loop inertia). Dangerous compressor cycling is prevented. The unit can operate safely with a low water volume, and this frequently makes a buffer tank unnecessary (see minimum water volume later in this document).
  - Pro-Dialog+ permanently analyses the compressor suction and discharge pressures and temperatures. If an abnormal situation is detected, the control reacts, e.g. by reducing the capacity. As a result the compressors always operate in their ideal temperature range and many unit shut-downs due to a fault can be prevented.

- Ease-of-use
  - The Pro-Dialog+ interface includes five keys that permit navigation via intuitive tree-structure menus. Access to the information is very quick.
  - This new backlit LCD interface includes control by a contrast potiometer for optimised visibility in all lighting conditions.
  - The information is clearly displayed in English, French, German, Italian and Spanish (for other languages please consult Carrier Service).
  - The Pro-Dialog+ navigation uses intuitive tree-structure menus, similar to the Internet navigators. The menus are user-friendly and permit quick access to the principal operating parameters: number of compressors operating, suction/discharge pressure, compressor operating hours, setpoint, temperatures.
- Remote control option

Pro-Dialog+ permits control and monitoring of the unit using a wired interface:

- Start/stop
- Operating mode selection: cooling or heating
- Demand limit
- Dual setpoint
- User safety loop.

The control remotely reports any problem.

The CCN clock board connection offers other control possibilities:

Two independent time schedules to control:

- Unit start/stop
- Operation at a second chilled-water setpoint (for example: unoccupied mode)
- Operation of two units in parallel (master/slave function), and remote control via a communication bus (RS 485 serial port).

Operating limits

30WG

30WG		Min	Max
Evaporator			
Entering water temperature at start-up	°C	7.5*	27
Leaving water temperature during operation	°C	5**	20
Entering/leaving water temperature difference	K	2.5	7
Condenser			
Entering water temperature at start-up	°C	15***	55****
Leaving water temperature during operation	°C	20	60
Entering/leaving water temperature difference	K	2.5	18

* For entering water temperatures below 7.5 °C at start-up, contact Carrier.
** If the leaving water temperature is below 5 °C, a frost protection solution must be used. Please refer to option 6 for evaporator leaving water low-temperature applications (< 5 °C).
*** For applications with a condenser entering temperature below 15 °C the use of a three-way valve is recommended. This three-way valve can be controlled by the 0-10 V analogue output of the Pro-Dialog+ control.
**** For a water flow rate that corresponds to a maximum water-side temperature difference of 5 K.

30WG + drycooler		Min	Max
Evaporator			
Entering water temperature at start-up	°C	7.5*	27
Leaving water temperature during operation	°C	5**	20
Entering/leaving water temperature difference	K	2.5	7
Condenser without hydronic kit			
Entering air temperature at start-up + during operation	°C	10-15***	40-45****
Condenser with option 270V (kit with variable-speed pump)			
Entering air temperature at start-up+ during operation	°C	-10†	40-45****

* For entering water temperatures below 7.5 °C at start-up, contact Carrier.
** If the leaving water temperature is below 5 °C, a frost protection solution must be used. Please refer to option 6 for evaporator leaving water low-temperature applications (< 5 °C).
*** The minimum entering air temperature is based on the drycooler selection.
**** The maximum entering air temperature is based on the drycooler selection.
† For applications with a low condenser entering air temperature the use of a three-way valve is recommended. This three-way valve can be controlled by the 0-10 V analogue output of the Pro-Dialog+ control.

30WG + option 6		Min	Max
Evaporator			
Entering water temperature at start-up	°C	-9.5*	27
Leaving water temperature during operation	°C	-12*	20
Entering/leaving water temperature difference	K	2.5	3
Condenser			
Entering water temperature at start-up	°C	15**	55***
Leaving water temperature during operation	°C	20	60
Entering/leaving water temperature difference	K	2.5	18

Note: Do not exceed the maximum operating temperature.
* A frost protection solution must be used.
** For applications with a condenser entering temperature below 15 °C the use of a three-way valve is recommended. This three-way valve can be controlled by the 0-10 V analogue output of the Pro-Dialog+ control.
*** For a water flow rate that corresponds to a maximum water-side temperature difference of 5 K.

30WGA

30WGA		Min	Max
Evaporator			
Entering water temperature at start-up	°C	7.5*	27
Leaving water temperature during operation	°C	5**	20
Entering/leaving water temperature difference	K	2,5	7
Air entering temperature (at start-up and during operation)* **			
Air entering temperature (fixed-speed fan)	°C	0***	35 to 48‡
Air entering temperature (variable-speed fan)	°C	-10 to -20†	35 to 48‡

* For entering water temperatures below 7.5 °C at start-up, contact Carrier.
** 30WGA unit can operate down to 0 °C if the configuration of the fluid type used is modified. If the leaving water temperature is below 5 °C, a frost protection solution must be used.
*** The minimum temperature range is based on the condenser selected. If the condenser only has a few fan stages, the use of variable-speed fans is recommended from 10 °C.
† The minimum temperature range is based on the condenser selected.
‡ The maximum temperature range is based on the condenser selected.

Operating ranges

30WG

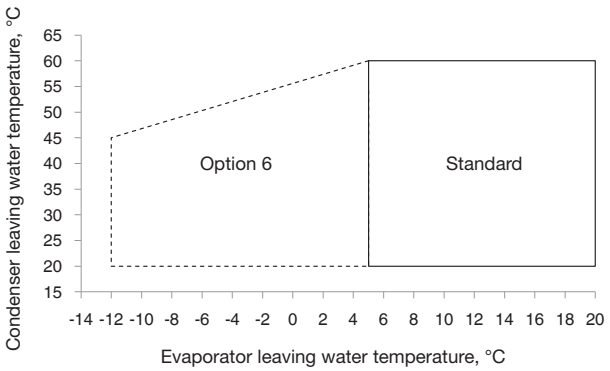

—— 30WG standard unit
- - - 30WG unit with option 6 (brine)
Option 6: Very low-temperature glycol solution

30WGA

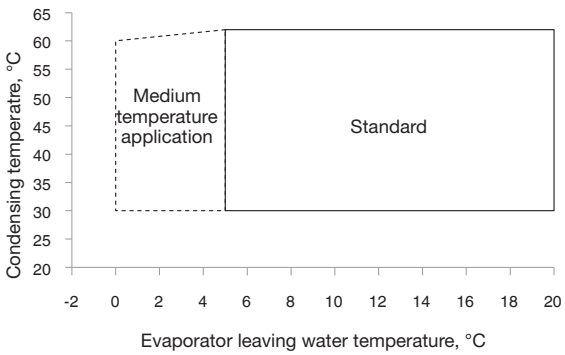

—— 30WGA standard unit
- - - 30WGA unit for medium temperature application (% glycol < 25%)

Hydronic module (options 116T, 270T)

Typical water piping diagram

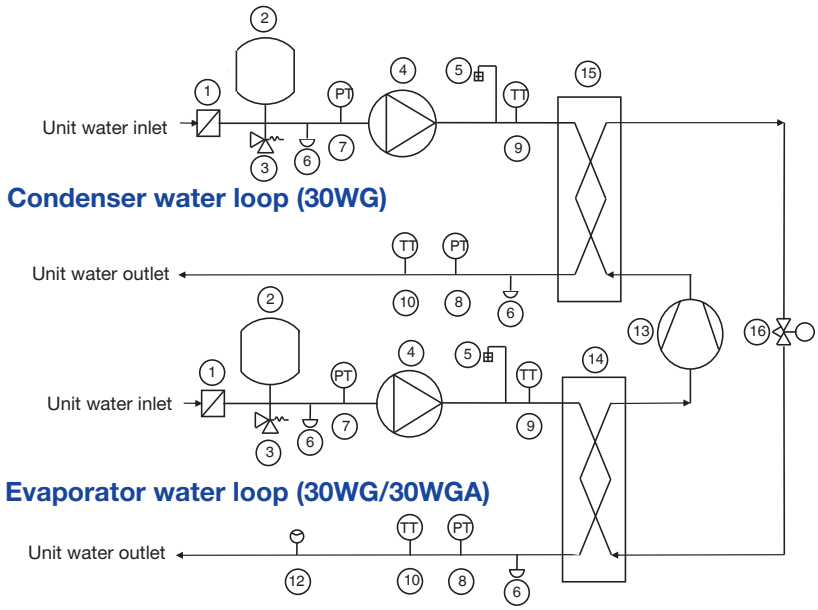

Components of unit and hydronic module

1 Victaulic screen filter (option 293 or 293A only)
2 Expansion tank (option 293 or 293A only)
3 Safety valve (option 293 or 293A only)
4 Water pump
5 Air vent
6 Water drain valve
7/8 Entering/leaving pressure sensor
9/10 Entering/leaving temperature probe
12 Flow switch 61WG option 272 (sizes 020-045 only)
13 Compressor
14 Evaporator
15 Condenser
16 Expansion device

NOTE: Units without hydronic module include a flow switch.

Physical data, units with hydronic module

30WG/30WGA		020	025	030	035	040	045	050	060	070	080	090
Operating weight, 30WG/61WG (options 116V and 270V)*	kg	305	313	313	321	327	334	513	521	533	544	574
Operating weight, 30WGA (option 116V)*	kg	250	258	258	263	266	271	431	435	442	449	465
Height**	mm	1463	1463	1463	1463	1463	1463	1463	1463	1463	1463	1463
Hydronic module												
Maximum operating pressure	kPa	300	300	300	300	300	300	300	300	300	300	300
Water filter (max. removed particle diameter)	mm	1.2	1.2	1.2	1.2	1.2	1.2	1.2	1.2	1.2	1.2	1.2
Expansion tank capacity***	l	8	8	8	8	8	8	12	12	12	12	12
Water connections	in	1.5	1.5	1.5	1.5	1.5	1.5	2	2	2	2	2

* Weight shown is a guideline only.
** The length and width dimensions are the same as for the standard unit.
*** When delivered, the standard pre-inflation of the tanks is not necessary the optimal value for the system. To permit changing the water volume, change the inflation pressure to a pressure that is close to the static head of the system. Fill the system with water (purging the air) to a pressure value that is 10 to 20 kPa higher than the pressure in the tank.

Electrical data, options 116T, 270T

The original pumps that are factory-installed in these units have motors with efficiency class IE2. The additional electrical data required by regulation 640/2009 are given in the installation, operation and maintenance instructions.

This regulation regards the application of directive 2005/32/CE on the eco-design requirements for electric motors.

Pump curve, 30WG/30WGA (options 116, 270)

Data applicable for:

- Fresh water 20 °C
- In case of use of the glycol, the maximum water flow is reduced
- The curves represented below are in normal conditions: leaving water on the back side of the unit (without option 274).

Fixed-speed low-pressure pumps (options 116T - 270T)

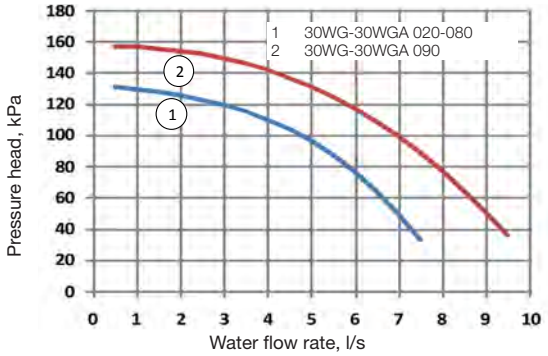

Variable-speed high-pressure pumps (options 116V - 270V)

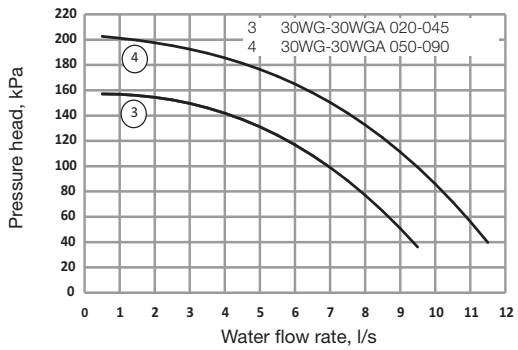

Plate heat exchanger pressure drop (includes internal piping)

Evaporator - standard unit without hydronic module - Water only

30WG/30WGA 020-045

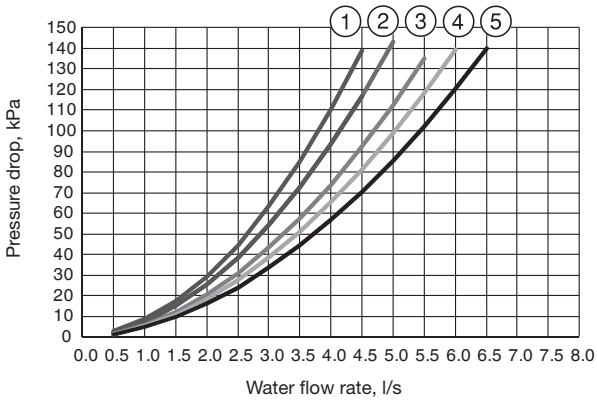

1 30WG/30WGA 020
2 30WG/30WGA 025 to 30WG/30WGA 030
3 30WG/30WGA 035
4 30WG/30WGA 040
5 30WG/30WGA 045

30WG/30WGA 050-090

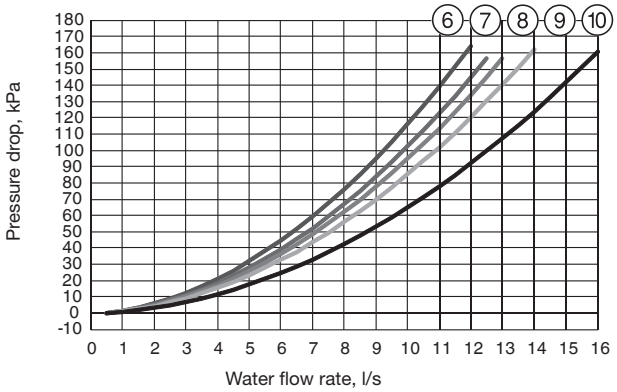

6 30WG/30WGA 050
7 30WG/30WGA 060
8 30WG/30WGA 070
9 30WG/30WGA 080
10 30WG/30WGA 090

Condenser - standard unit without hydronic module - Water only

30WG 020-045

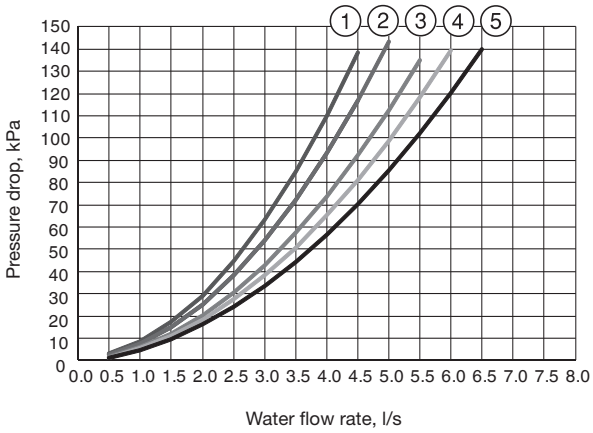

1 30WG 020
2 30WG 025 to 030
3 30WG 035
4 30WG 040
5 30WG 045

30WG 050-090

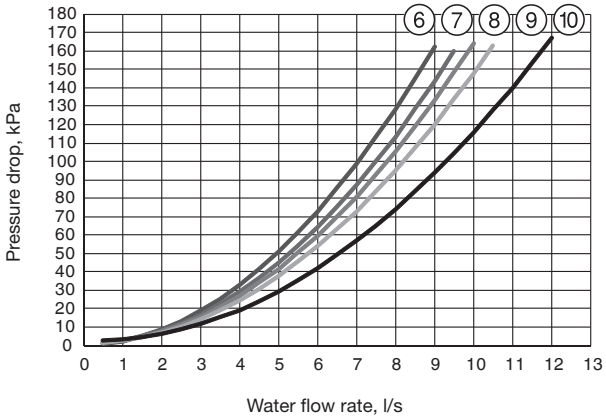

6 30WG 050
7 30WG 060
8 30WG 070
9 30WG 080
10 30WG 090

Available external static pressure, units with hydronic module (variable-speed high-pressure pumps)

Data applicable for:

- Fresh water (without antifreeze) 20 °C
- In case of use of the glycol, the maximum water flow is reduced
- The curves represented below are in normal conditions: leaving water on the back side of the unit (without option 274).

Evaporator

30WG/30WGA 020-045

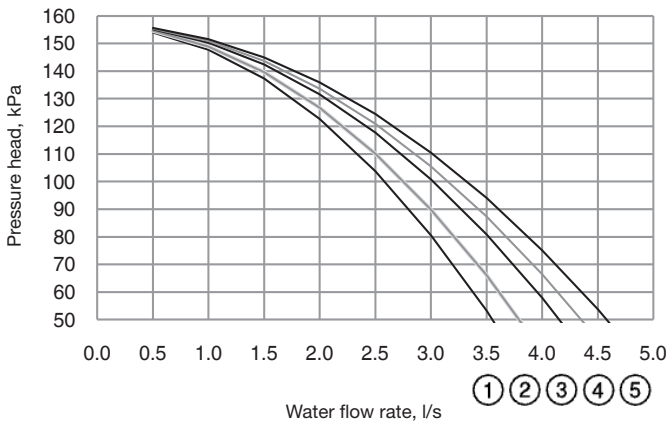

1 30WG/30WGA 020
2 30WG/30WGA 025 to 030
3 30WG/30WGA 035
4 30WG/30WGA 040
5 30WG/30WGA 045

30WG/30WGA 050-090

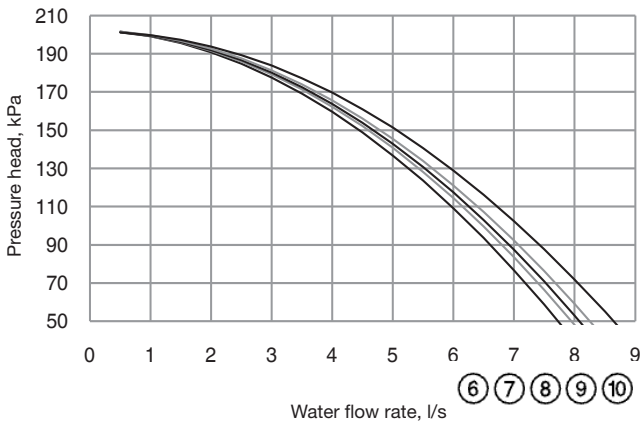

6 30WG/30WGA 050
7 30WG/30WGA 060
8 30WG/30WGA 070
9 30WG/30WGA 080
10 30WG/30WGA 090

Condenser

30WG 020-045

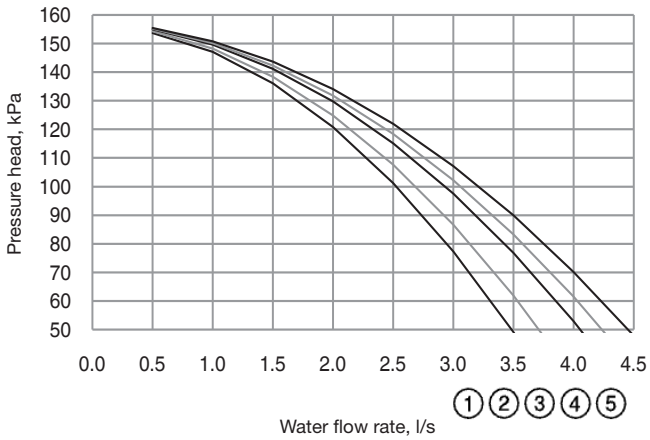

1 30WG 020
2 30WG 025 to 030
3 30WG 035
4 30WG 040
5 30WG 045

30WG 050-090

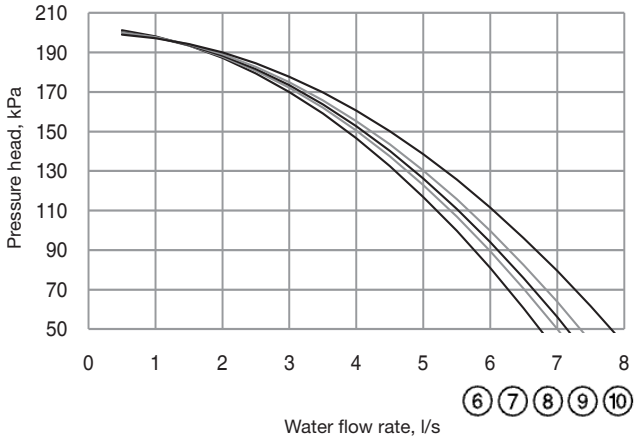

6 30WG 050
7 30WG 060
8 30WG 070
9 30WG 080
10 30WG 090

Available external static pressure, units with hydronic module (fixed-speed low-pressure pumps)

Data applicable for:

- Fresh water 20 °C
- In case of use of the glycol, the maximum water flow is reduced
- The curves represented below are in normal conditions: leaving water on the back side of the unit (without option 274).

Evaporator

30WG/30WGA 020-045

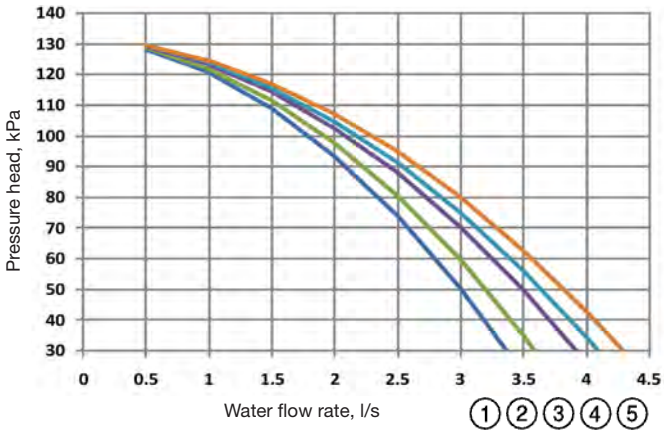

1 30WG/30WGA 020
2 30WG/30WGA 025 to 030
3 30WG/30WGA 035
4 30WG/30WGA 040
5 30WG/30WGA 045

30WG/30WGA 050-090

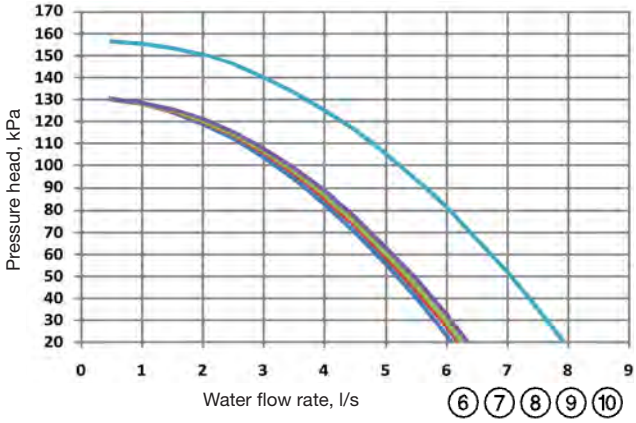

6 30WG/30WGA 050
7 30WG/30WGA 060
8 30WG/30WGA 070
9 30WG/30WGA 080
10 30WG/30WGA 090

Condenser

30WG 020-045

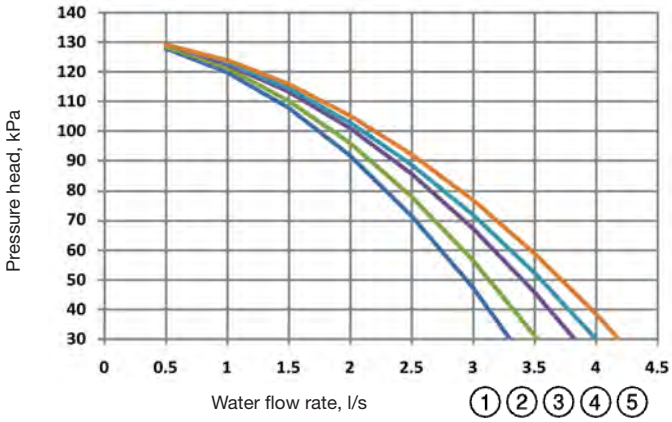

1 30WG 020
2 30WG 025 to 030
3 30WG 035
4 30WG 040
5 30WG 045

30WG 050-090

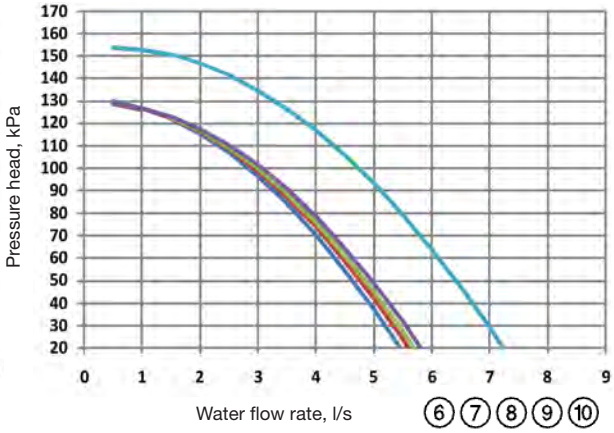

6 30WG 050
7 30WG 060
8 30WG 070
9 30WG 080
10 30WG 090

Dimensions/clearances

30WG 020-045 - standard unit

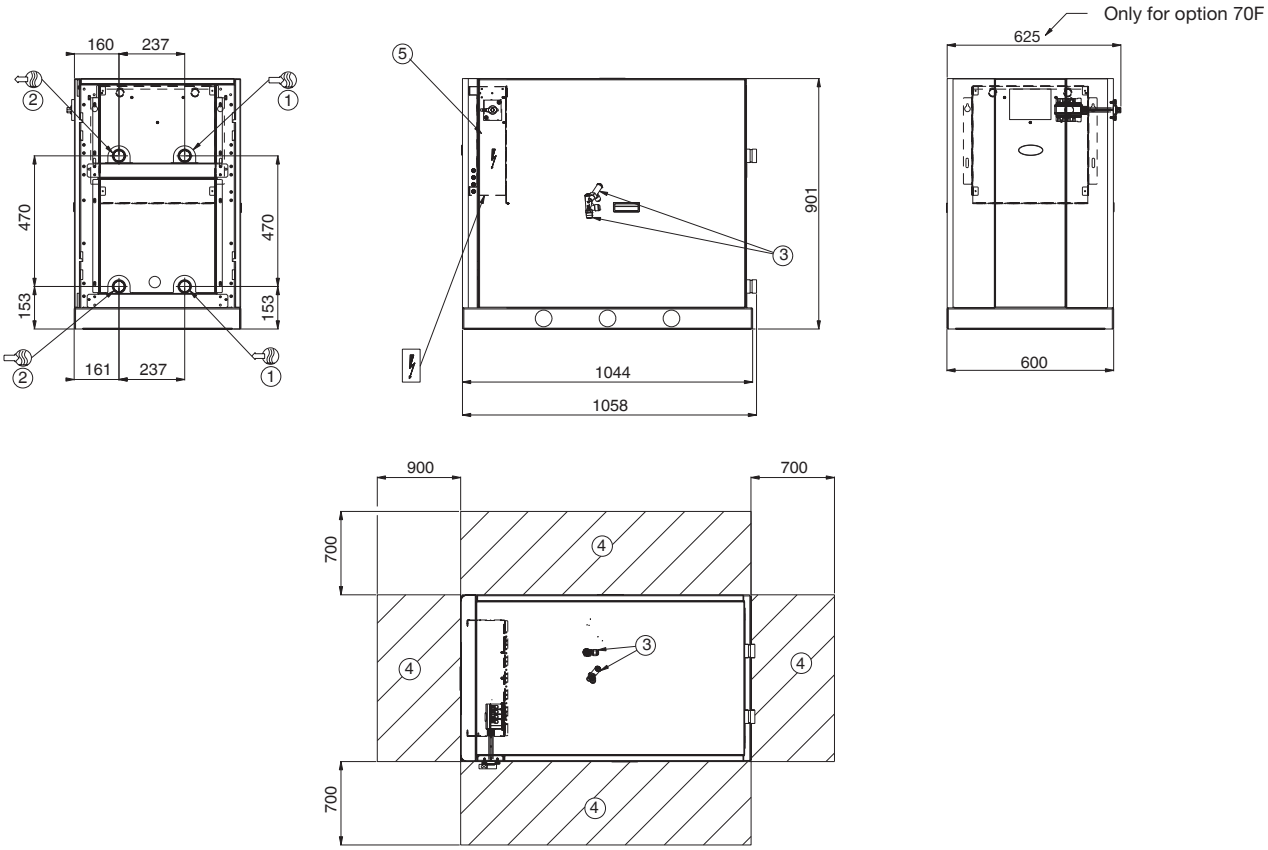

30WG 020-045 - unit with top connections (option 274)

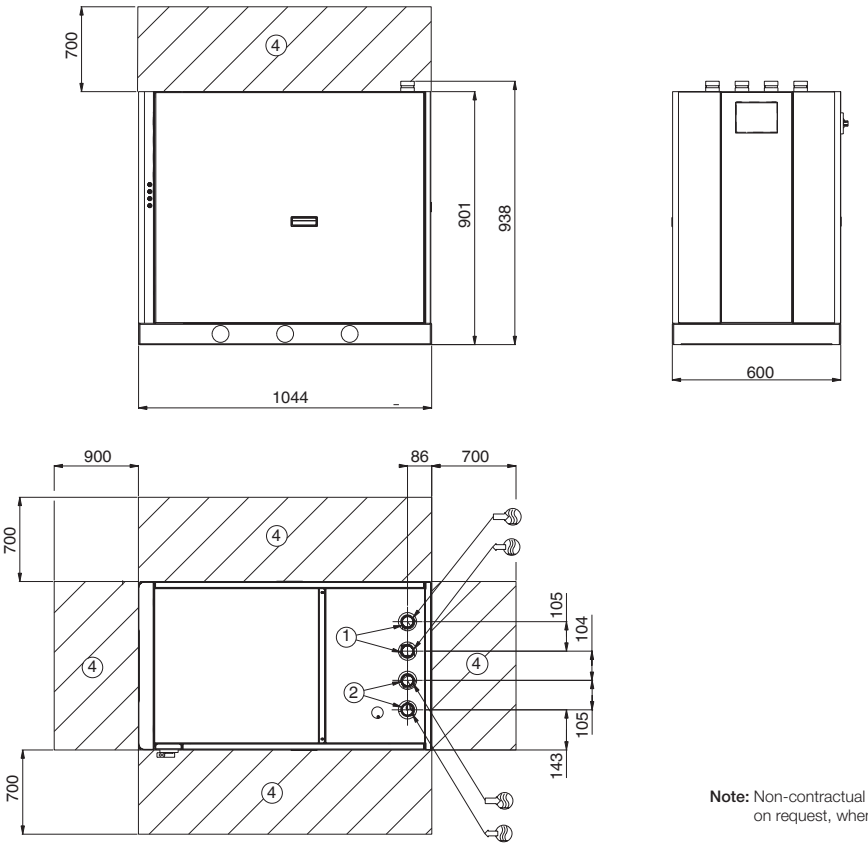

Legend:
All dimensions are in mm.

1. Evaporator
2. Condenser
3. Safety valve
4. Clearances required for maintenance (see note)
5. Control box

Water inlet
Water outlet
Power wiring connection

Note: Non-contractual drawings. Refer to the certified dimensional drawings available on request, when designing an installation.

30WG 020-045 - unit with evaporator hydronic module (option 116)

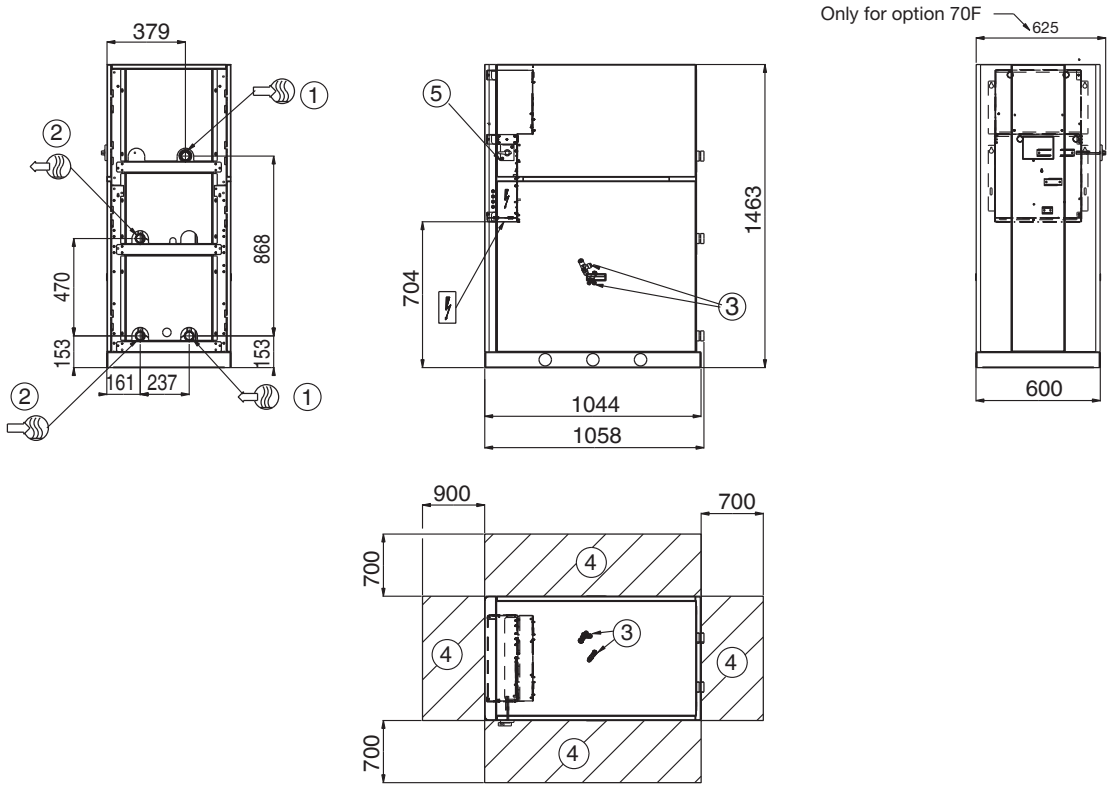

30WG 020-045 - unit with condenser hydronic module (option 270)

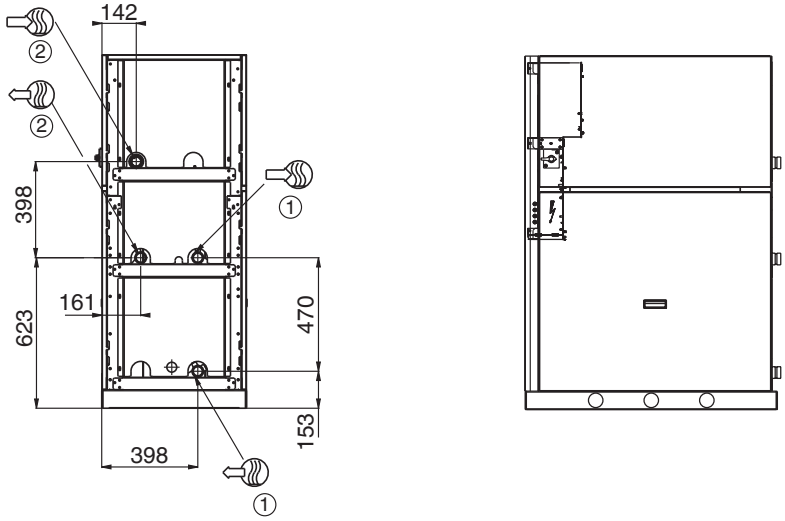

30WG 020-045 - unit with evaporator/condenser hydronic modules (options 116 + 270)

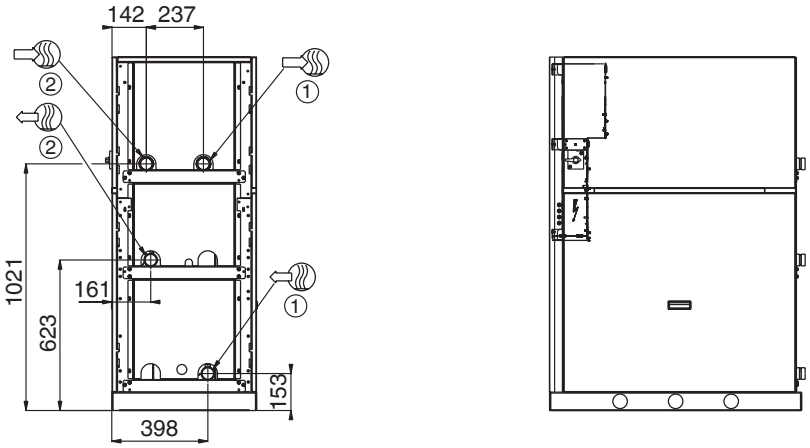

Legend:
All dimensions are in mm.

1. Evaporator
2. Condenser
3. Safety valve
4. Clearances required for maintenance (see note)
5. Control box

Water inlet
Water outlet
Power wiring connection

Note: Non-contractual drawings. Refer to the certified dimensional drawings available on request, when designing an installation.

30WG 020-045 - unit with hydronic module and top connections (options 116 + 274 or 270 + 274 or 116 + 270 + 274)

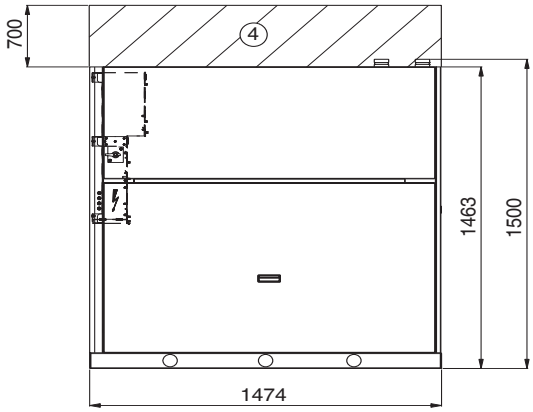

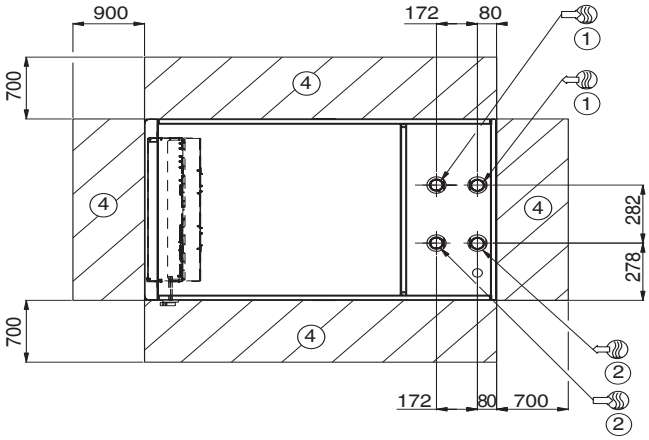

30WG 020-045 - stackable unit (option 273)

Note: The water and electrical connections are identical to those of the standard unit.

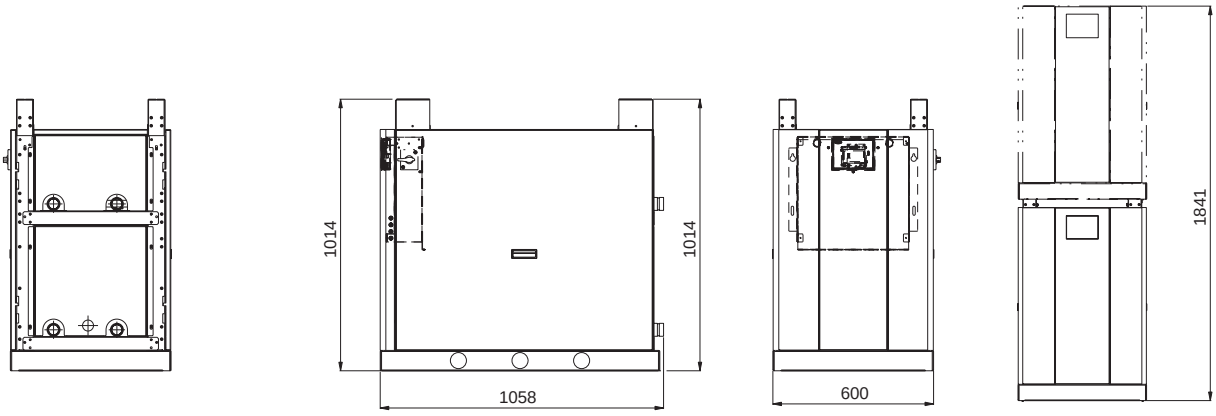

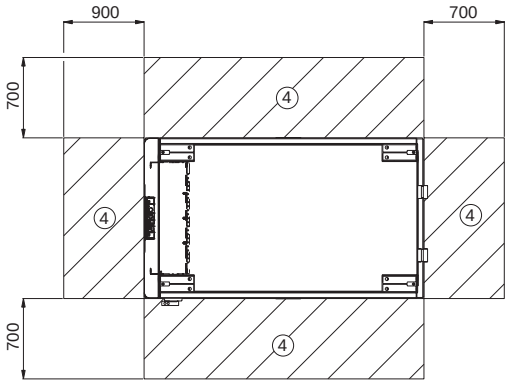

Legend:
All dimensions are in mm.

1. Evaporator
2. Condenser
3. Safety valve
4. Clearances required for maintenance (see note)
5. Control box

Water inlet
Water outlet
Power wiring connection

Note: Non-contractual drawings. Refer to the certified dimensional drawings available on request, when designing an installation.

30WG 050-090 - standard unit

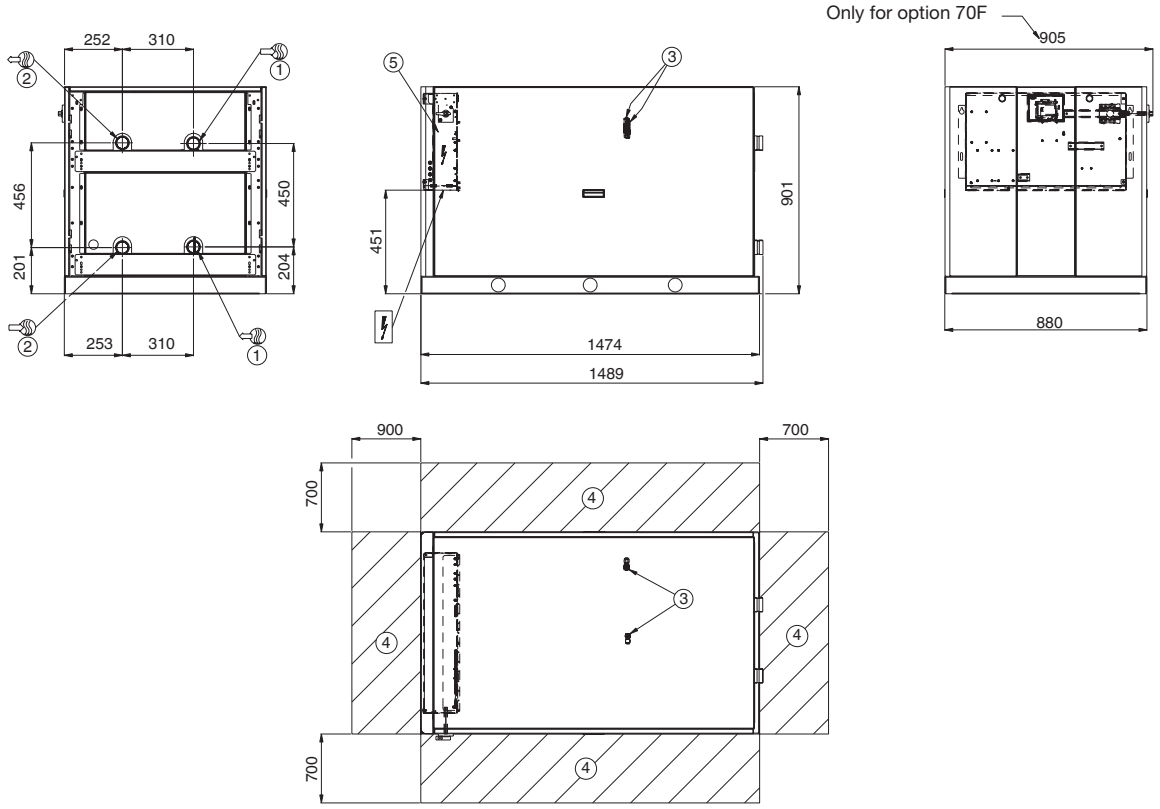

30WG 050-090 - unit with top connections (option 274)

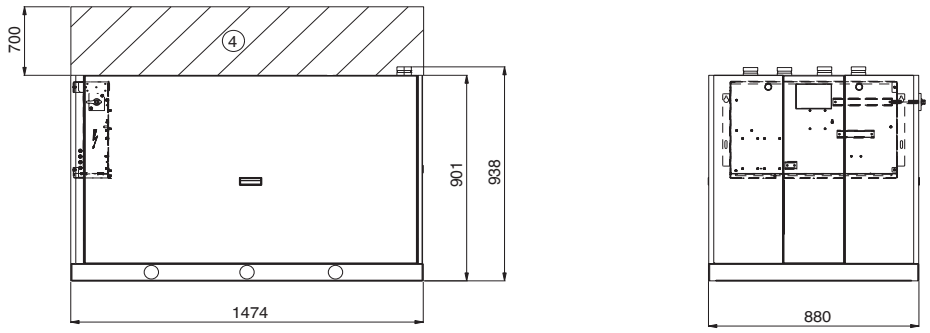

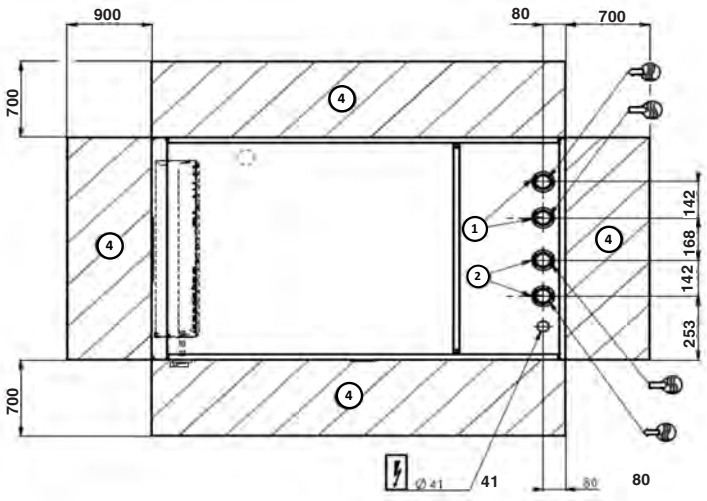

Legend:
All dimensions are in mm.

1. Evaporator
2. Condenser
3. Safety valve
4. Clearances required for maintenance (see note)
5. Control box

Water inlet
Water outlet
Power wiring connection

Note: Non-contractual drawings. Refer to the certified dimensional drawings available on request, when designing an installation.

30WG 050-090 - unit with evaporator hydronic module (option 116)

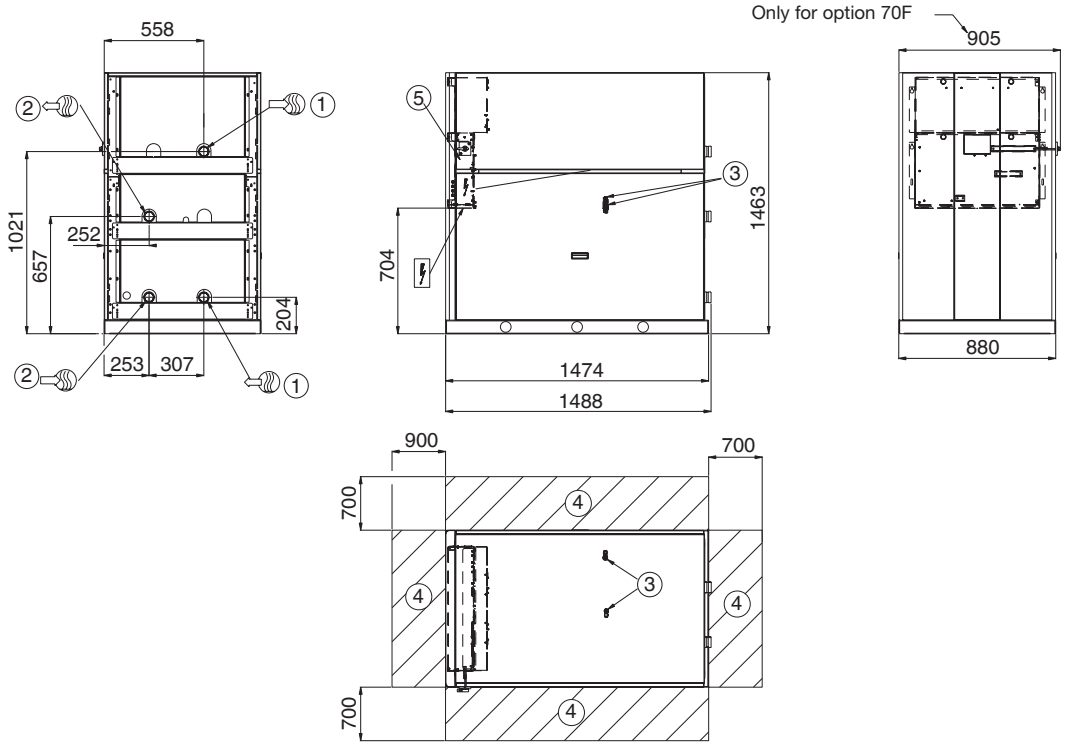

30WG 050-090 - unit with condenser hydronic module (option 270)

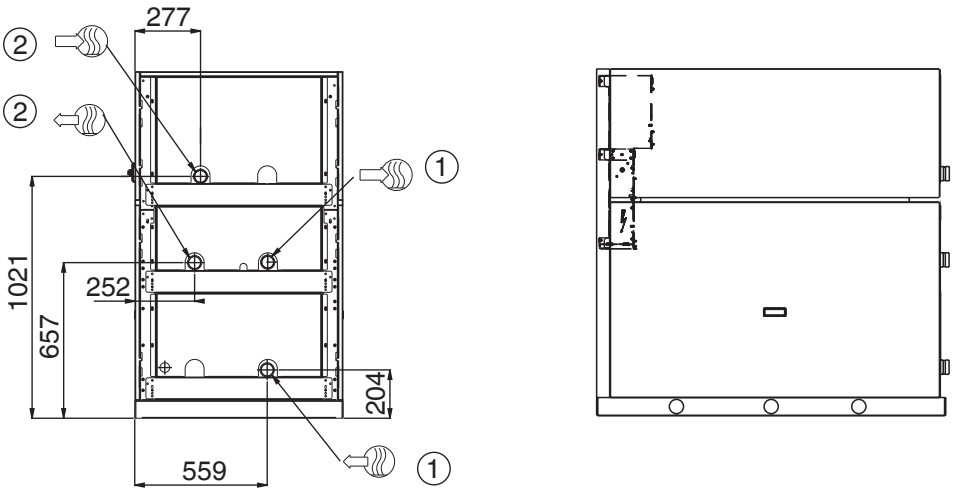

30WG 050-090 - unit with evaporator/condenser hydronic modules (options 116 + 270)

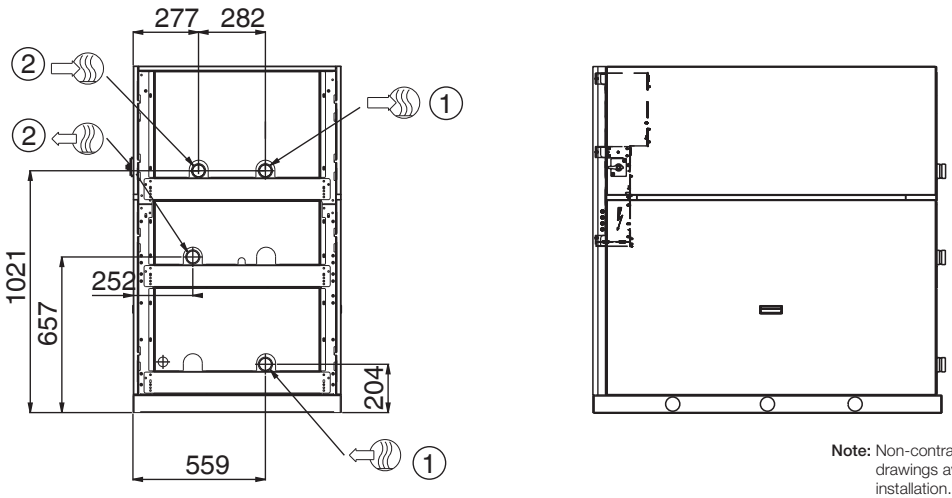

Legend:
All dimensions are in mm.

1. Evaporator
2. Condenser
3. Safety valve
4. Clearances required for maintenance (see note)
5. Control box

Water inlet
Water outlet
Power wiring connection

Note: Non-contractual drawings. Refer to the certified dimensional drawings available on request, when designing an installation.

30WG 050-090 - unit with hydronic module and top connections (options 116 + 274 or 270 + 274 or 116 + 270 + 274)

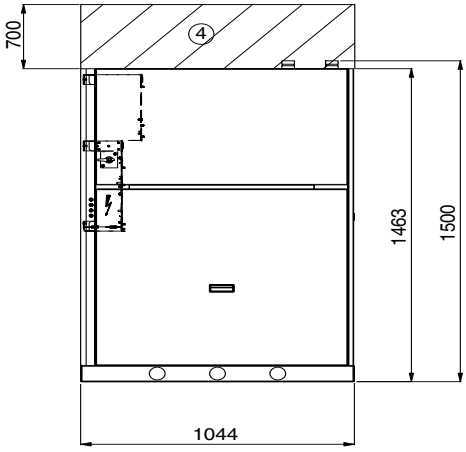

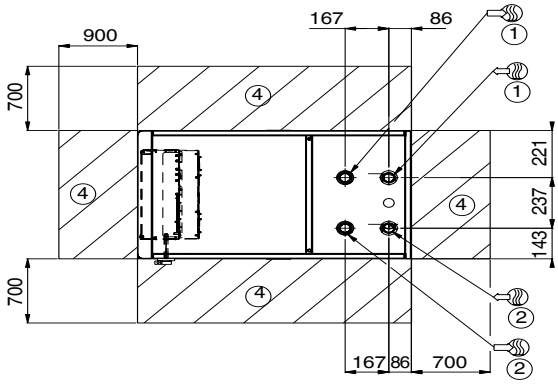

30WG 050-090 - stackable unit (option 273)

Note: The water and electrical connections are identical to those of the standard unit.

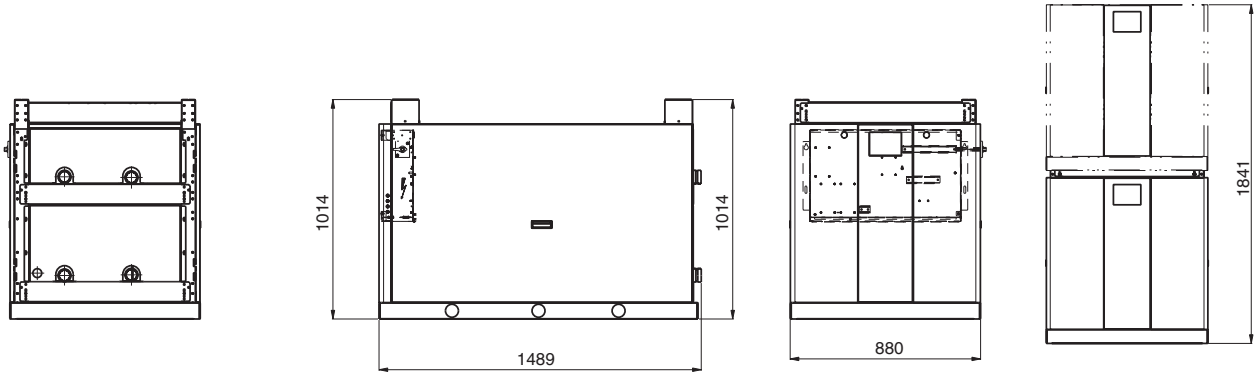

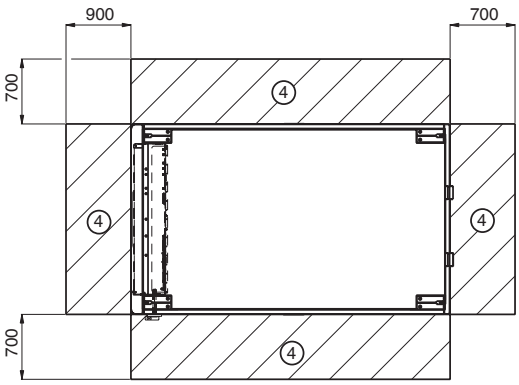

Legend:
All dimensions are in mm.

1. Evaporator
2. Condenser
3. Safety valve
4. Clearances required for maintenance (see note)
5. Control box

Water inlet
Water outlet
Power wiring connection

Note: Non-contractual drawings. Refer to the certified dimensional drawings available on request, when designing an installation.

30WGA 020-045 - standard unit

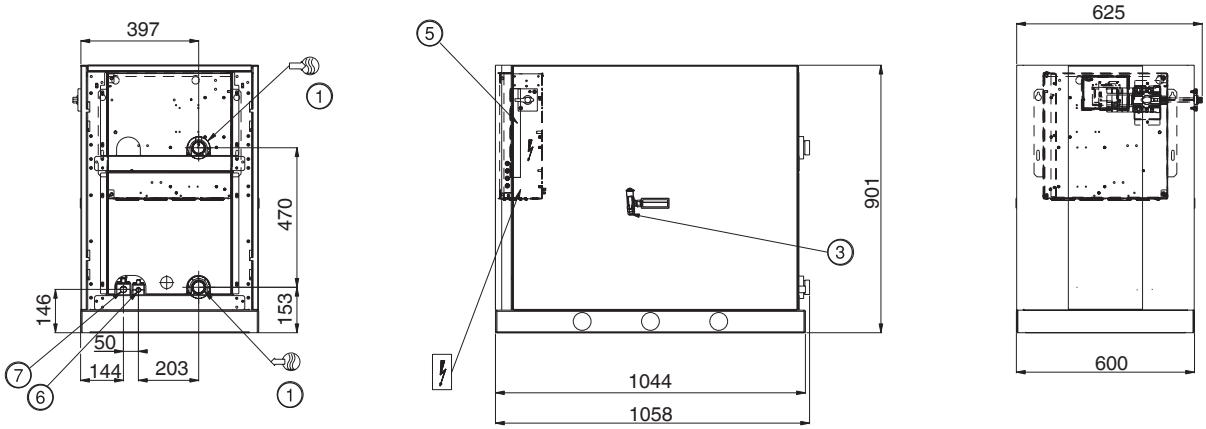

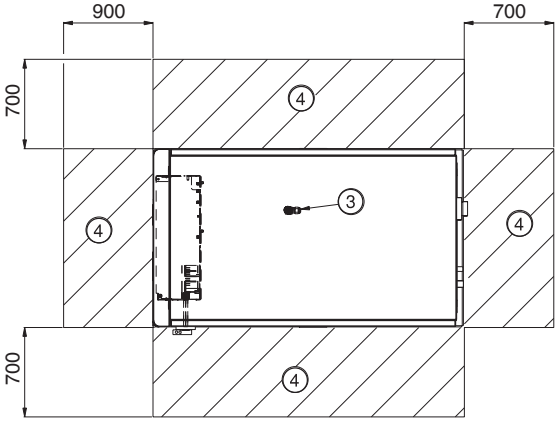

Legend:
All dimensions are in mm

1. Evaporator
3. Safety valve
4. Clearances required for maintenance (see note)
5. Control box
6. Refrigerant inlet
7. Refrigerant outlet
- Water inlet
- Water outlet
- Power wiring connection

30WGA 020-045 - unit with evaporator hydronic module (option 116)

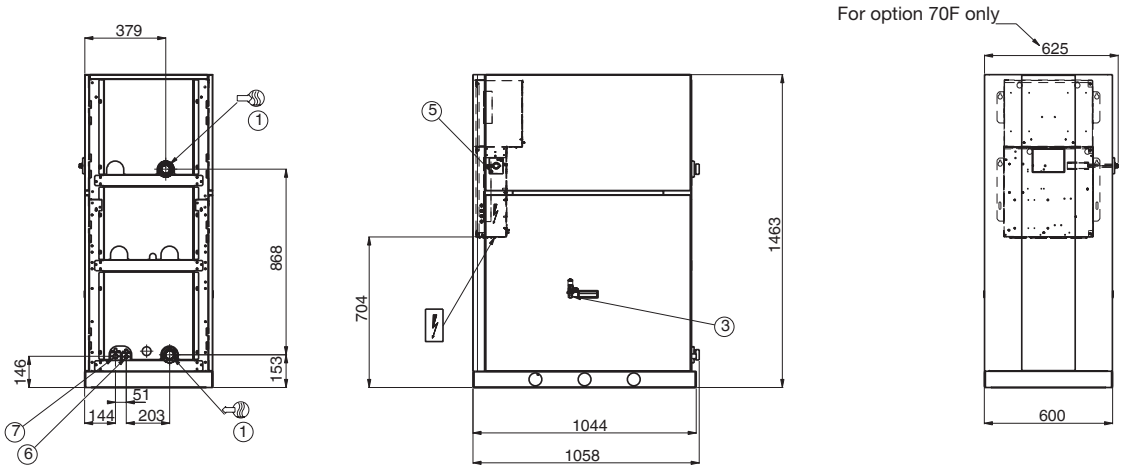

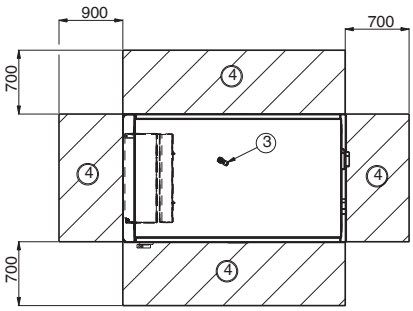

Note: Non-contractual drawings. Refer to the certified dimensional drawings available on request, when designing an installation.

30WGA 020-045 - stackable unit (option 273)

Note: The water and electrical connections are identical to those of the standard unit.

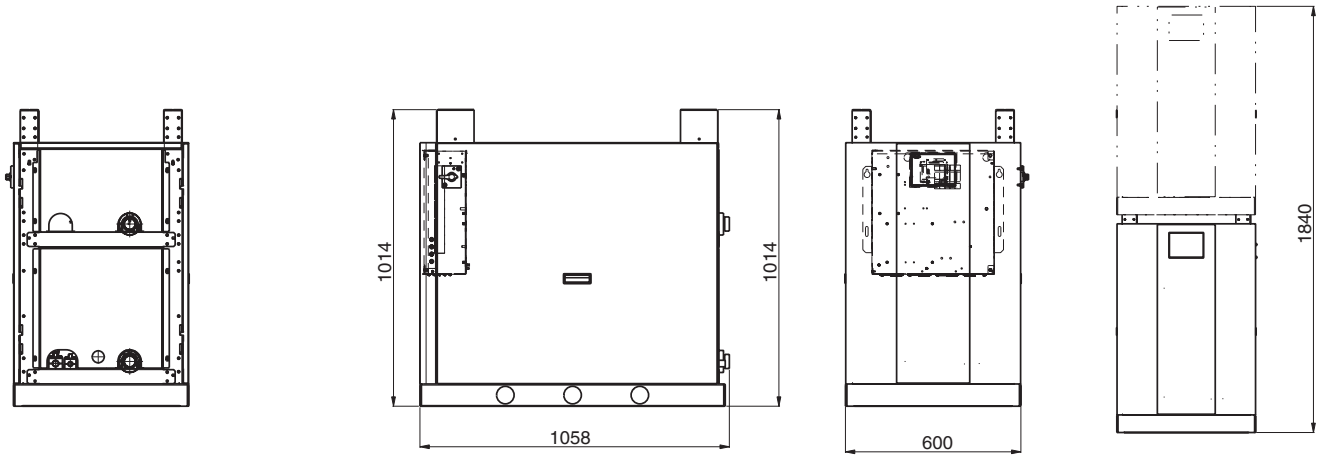

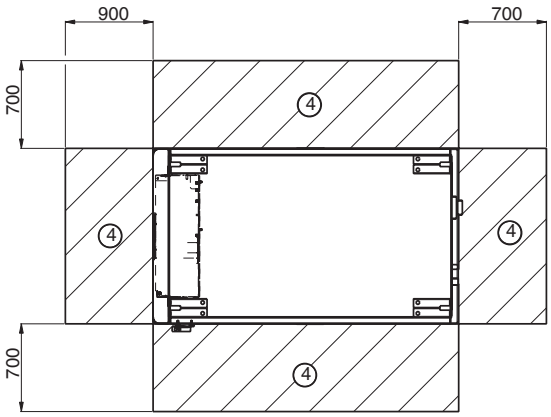

Legend:
All dimensions are in mm

1. Evaporator
3. Safety valve
4. Clearances required for maintenance (see note)
5. Control box
6. Refrigerant inlet
7. Refrigerant outlet
- Water inlet
- Water outlet
- Power wiring connection

30WGA 050-090 - standard unit

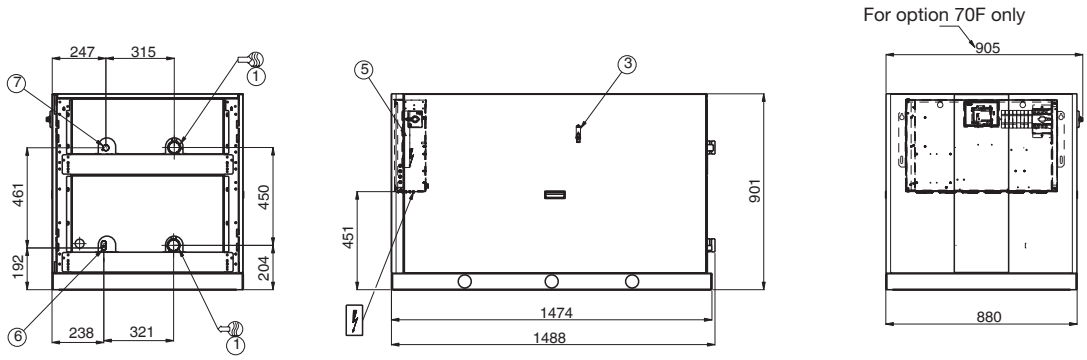

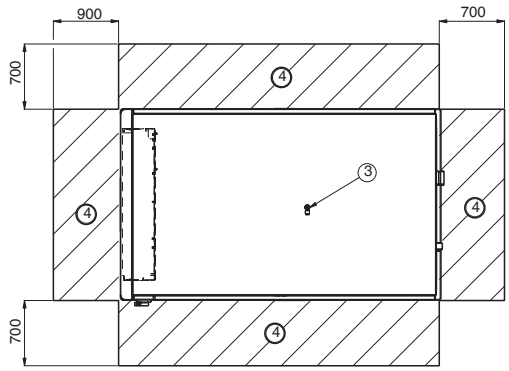

Note: Non-contractual drawings. Refer to the certified dimensional drawings available on request, when designing an installation.

30WGA 050-090 - unit with evaporator hydronic module (option 116)

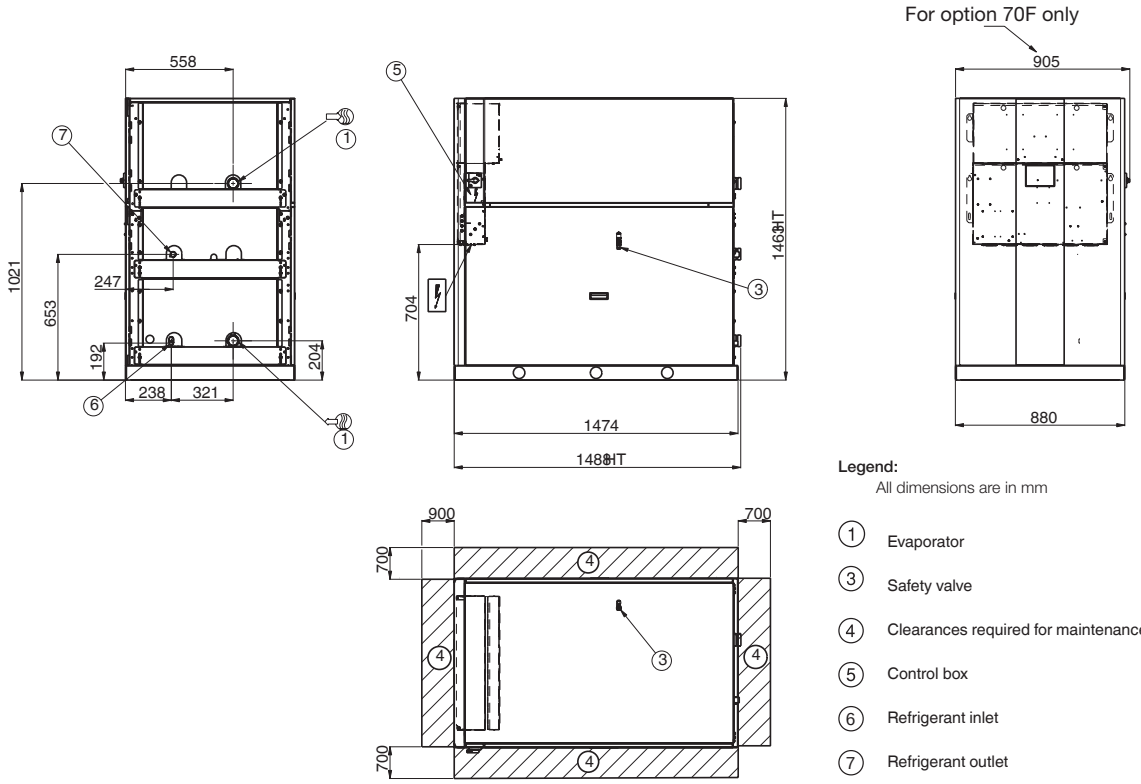

Legend:
All dimensions are in mm

1. Evaporator
3. Safety valve
4. Clearances required for maintenance (see note)
5. Control box
6. Refrigerant inlet
7. Refrigerant outlet
- Water inlet
- Water outlet
- Power wiring connection

30WGA 050-090 - stackable unit (option 273)

Note: The water and electrical connections are identical to those of the standard unit.

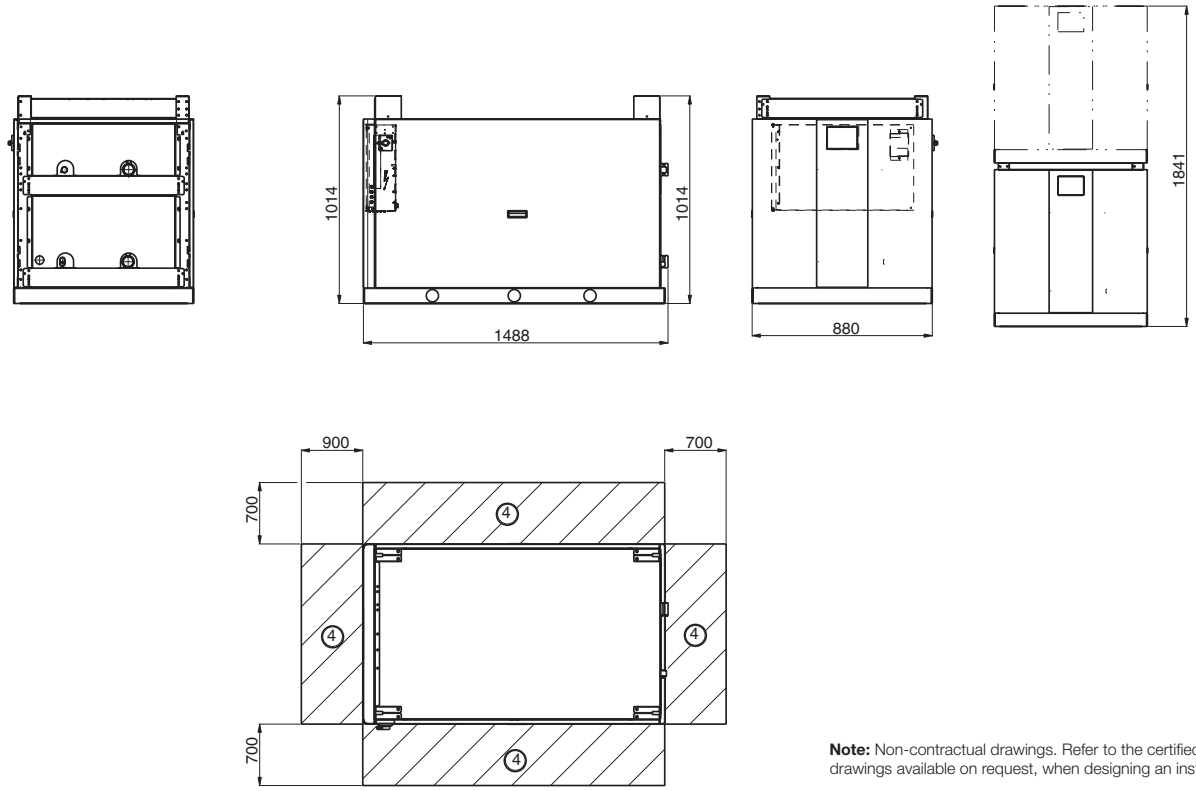

Note: Non-contractual drawings. Refer to the certified dimensional drawings available on request, when designing an installation.

WATER-COOLED/CONDENSERLESS LIQUID CHILLERS
WITH INTEGRATED HYDRONIC MODULE

30RW/30RWA

Nominal cooling capacity 109 -315 kW

COOLING

AQUASNAP®

The 30RW/30RWA AquaSnap liquid chiller range features the latest technological innovations: scroll compressors, digital auto-adaptive Pro-Dialog control and non-ozone depleting refrigerant HFC-407C.

AquaSnap can be supplied with hydronic evaporator and condenser modules as standard, limiting the installation to simple operations such as the entering and leaving water piping connection.

An autoadaptive control algorithm intelligently controls the condenser water pump speed and the operation of the glycol cooler fans (30RW) or of the air-cooled condenser fans (30RWA) to ensure reliable and economical operation under any climate conditions.

Physical data

EUROVENT CERTIFIED PERFORMANCE
www.eurovent-certification.com

30RW/RWA				110	120	135	150	160	185	210	245	275	300
Cooling													
30RW													
Full load performances*	C1	Nominal capacity	kW	109.6	124.52	141.48	151.49	164.45	186.36	219.43	251.27	288.28	315.1
	C1	EER	kW/kW	4.05	3.90	4.00	3.92	4.49	4.25	4.35	4.28	4.32	4.31
	C1	Eurovent Energy Class		D	D	D	D	C	D	C	C	C	C
Seasonal Efficiency*		ESEER	kW/kW	4.79	4.56	4.74	4.66	5.36	5.06	5.17	5.01	5.27	5.15
Operating weight													
30RW unit without pump			kg	864	937	956	977	1079	1144	1357	1471	1557	1557
30RWA unit without pump			kg	773	836	845	855	948	996	1159	1273	1311	1311
Extra weight													
30RW: single evaporator pump (option 116B)			kg	15	15	15	15	245	245	245	245	245	245
30RWA: single evaporator pump (option 116B)			kg	15	15	15	15	245	245	245	285	285	285
30RW/RWA: dual evaporator pump (option 116C)			kg	130	130	130	130	300	300	358	358	358	358
30RW: single condenser pump (option 270B)			kg	80	80	80	80	250	250	265	265	265	265
30RW: dual condenser pump (option 270C)			kg	140	140	140	140	310	310	368	368	368	368
Dimensions (length x depth x height)													
Standard unit with or without hydronic module			mm	2013 x 922 x 1963									
Unit with hydronic module (options 116B, 116C, 270B, 270C)			mm	2950 x 922 x 1993									
Refrigerant 30RW**				R-407C									
Compressors 30RW/30RWA				Hermetic scroll, 48.3 r/s									
Control				Pro-Dialog Plus									
Condensers (30RW)				Welded plate heat exchangers, max. water-side operating pressure with hydronic module 1000 kPa, without hydronic module 400 kPa									
Hydronic condenser module (30RW)				Removable screen filter, variable-speed water pump, expansion tank, safety valve, pressure gauge, and purge valve									
Condenser pump				Single or twin-head composite centrifugal pump, according to option used, variable speed by frequency converter (48.3 r/s)									
Evaporator (30RW/30RWA)				Welded direct-expansion plate heat exchanger, max. water-side operating pressure with hydronic module 1000 kPa, without hydronic module 400 kPa									
Hydronic evaporator module (30RW/30RWA)				Removable screen filter, water pump, expansion tank, water flow switch, safety valve, pressure gauge, purge valve and control valve									
Evaporator pump				Single or twin-head composite centrifugal pump, according to option used (48.3 r/s)									
Water connections (30RW/30RWA)				Victaulic***									
Field refrigerant connections (30RWA)				Welded copper tube									

C1 Cooling mode conditions: Evaporator Water heat exchanger, entering/leaving temperature 12°C/7°C, fouling factor 0 m^2 K/W. Condenser Water heat exchanger, entering/leaving temperature 30°C/35°C, fouling factor 0 m^2 K/W.
* In accordance with standard EN14511-3:2013
† Weight shown is a guideline only. The dimensions shown are for the standard unit. For other unit types please refer to the dimensional drawings.
** The RWA units only have a nitrogen holding charge.
*** With tubular sleeve, supplied with the unit, consisting of a Victaulic connection at one end and a plain section at the other end.

Eurovent certified data

Electrical data

30RW/RWA (without hydronic module)		110	120	135	150	160	185	210	245	275	300
Power circuit											
Nominal power supply	V-ph-Hz	400-3-50 ± 10%									
Control circuit supply		24 V via internal transformer									
Maximum unit power input, 30RW + 30RWA*	kW	42.4	48.8	54.0	59.1	63.2	72.2	84.9	97.6	107.9	118.2
Nominal unit current draw 30RW**	A	48.1	54.0	61.0	68.0	71.7	84.2	96.1	108.0	122.0	136.0
Nominal unit current draw 30RWA***	A	51.4	58.0	64.7	71.4	76.3	89.6	102.8	116.0	129.4	142.8
Maximum start-up current, (standard unit without electronic starter)											
30RW + 30RWA†	A	245.2	254.0	309.0	318.0	212.6	245.7	314.5	332.0	396.0	414.0
Maximum start-up current, (electronic-starter option)											
30RW + 30RWA‡	A	159.2	168.0	201.0	210.0	158.6	183.7	228.5	246.0	288.0	306.0

* Power input of the compressor(s) at maximum unit operating conditions: entering/leaving evaporator water temp. 15°C/10°C, maximum condensing temp. 65°C, and 400 V nominal voltage.
** Nom. unit current draw at standard conditions: evaporator entering/leaving water temp. 12°C/7°C, condenser entering/leaving water temp. 30°C/35°C. The current values are given at 400 V nom. voltage.
*** Nom. unit current draw at standard conditions: evaporator entering/leaving water temp. 12°C/7°C, saturated condensing temp. (dew point) 45°C, subcooling 5 K. The current values are given at 400 V nom. voltage.
† Max. instantaneous starting current at 400 V nom. voltage and with compressor in across-the-line start (max. operating current of the smallest compressor(s) + locked rotor current of the largest compressor).
‡ Max. instantaneous starting current at 400 V nom. voltage and with compressor with electronic starter (max. operating current of the smallest compressor(s) + reduced start-up current of the largest compressor).

Options

- High-pressure single or dual pump, evaporator
- Condenser hydronic module with variable-speed single or dual pump
- Heat pump (hot-water control)
- Electronic starter for reduced startup current
- RS485 communications and “CCN Clock Board” time schedule board
- Very low temperature glycol solution down to -10°C
- Field water connections at the unit top

Features and advantages

- Ten sizes with nominal cooling capacities from 109 to 315 kW.
- AquaSnap chillers with scroll compressors, digital auto-adaptive Pro-Dialog control and Non-ozone depleting refrigerant HFC-407C.
- Can be supplied with integrated hydronic evaporator and condenser modules, limiting the installation to simple operations such as the entering and leaving water piping connection.
- Intelligent control of condenser water pump speed and operation of glycol cooler (30RW) or air-cooled condenser fans (30RWA) to ensure reliable and economical operation.
- Quick electrical connections.
- Units can operate down to -20°C outside temperature.
- The variable-speed condenser water pump automatically adjusts the water flow rate to maintain the ideal condensing conditions.
- High-performance plate heat exchangers maximise the thermodynamic properties of refrigerant HFC-407C. From size 30RW 160 the evaporator and the condenser have two interlaced refrigerant circuits.
- Space-saving design.
- No plant room required – unit can be installed in a place that is open to the public, if local regulations permit.
- The refrigerant circuit is completely leak-proof.
- Used with Carrier 09 series glycol coolers or air-cooled condensers, supplied ready for installation with a control box. All control components are installed and tested in the factory.

Operating limits

30RW

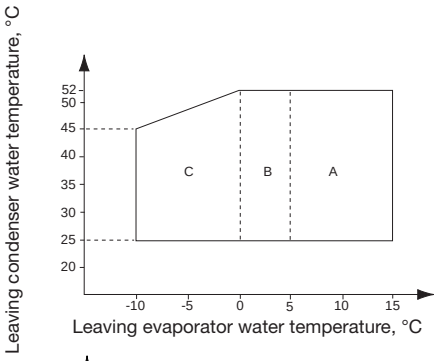

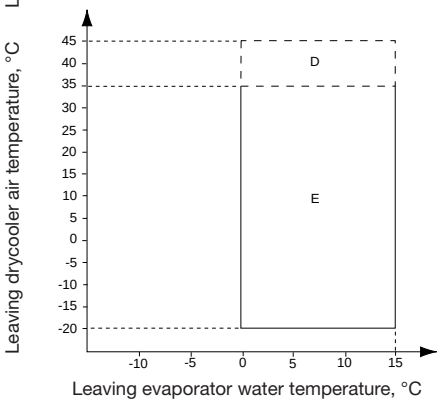

Notes 30RW

1. Evaporator and condenser ΔT = 5 K
2. For 30RW units without hydronic module with an entering condenser water temperature below 20°C a three-way valve is required to allow operation, while maintaining the correct condensing temperature.
3. For 30RW units equipped with a hydronic module the minimum entering water temperature is -15°C.
4. Maximum leaving condenser water temperature is 52°C (at full load)

A Standard unit with without antifreeze solution
B Standard unit operation with the anti-freeze solution required and control configuration for a leaving water temperature down to 0°C.
C Standard unit operation with the anti-freeze solution required and control configuration for a leaving water temperature down to -10°C.
D Operation at high air temperature is based on the drycooler selected.
E Operation at low air temperature is possible down to -20°C with a drycooler.

30RWA

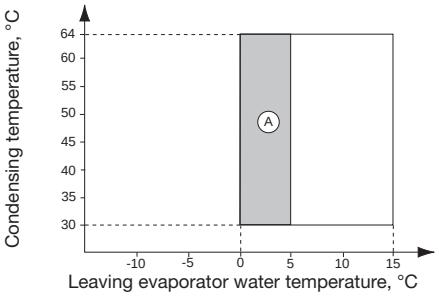

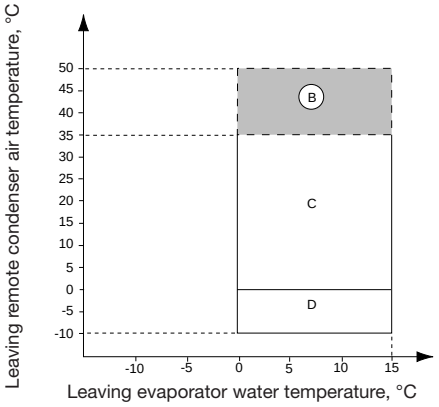

Notes 30RWA

1. Evaporator ΔT = 5 K
2. Unit operation is limited by the maximum compressor condensing temperature of 64°C.

A Standard unit operation with the anti-freeze solution required and special control configuration.
B Operation at high air temperature is based on the condenser selected.
C Operating range down to 0°C, if the air-cooled condenser is not equipped with a variable-speed head fan.
D Extended operating range with variable-speed fan.

Available static pressure, evaporator side 30RW/30RWA

Single pump

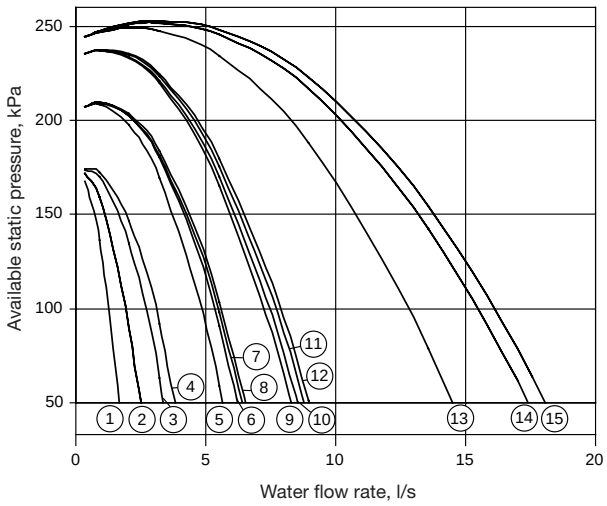

Legend

9	30RW/RWA 110
10	30RW/RWA 120
11	30RW/RWA 135
12	30RW/RWA 150
13	30RW/RWA 160-185
14	30RW/RWA 210-245
15	30RW/RWA 275-300

Dual pump

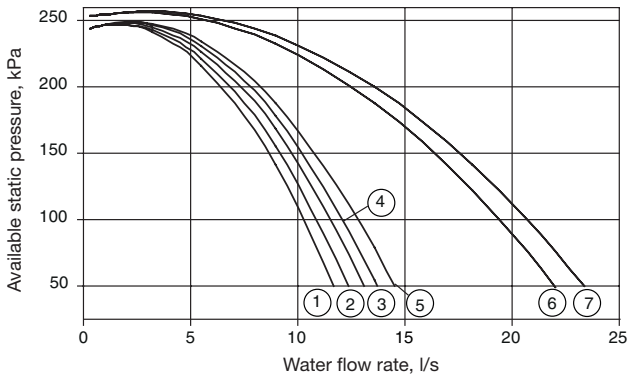

Legend

5	30RW/RWA 110
6	30RW/RWA 120
7	30RW/RWA 135
8	30RW/RWA 150
9	30RW/RWA 160-185
10	30RW/RWA 210-245
11	30RW/RWA 275-300

Available static pressure, condenser side 30RW

Single pump

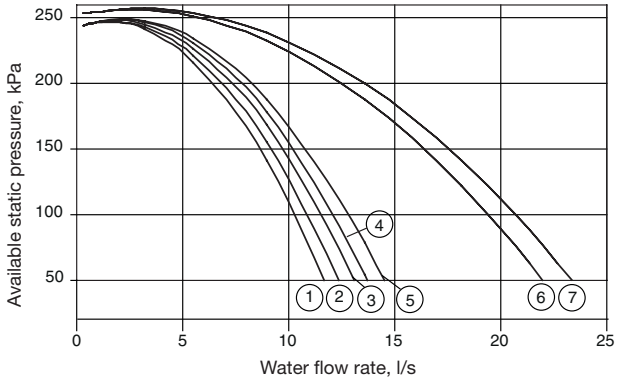

Legend

1	30RW 110
2	30RW 120
3	30RW 135
4	30RW 150
5	30RW 160-185
6	30RW 210-245
7	30RW 275-300

Dual pump

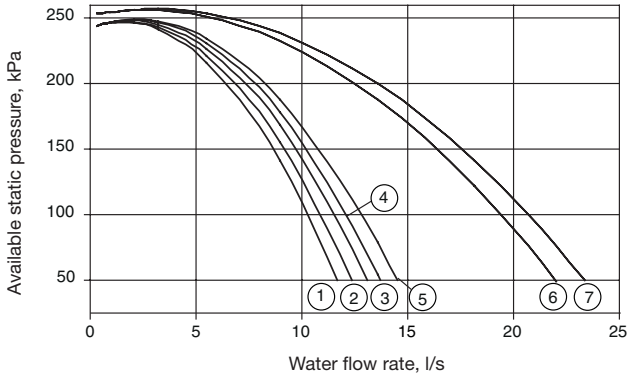

Legend

1	30RW 110
2	30RW 120
3	30RW 135
4	30RW 150
5	30RW 160-185
6	30RW 210-245
7	30RW 275-300

Dimensions/clearances

30RW 110-150/30RWA 060-150 - unit with or without hydronic module

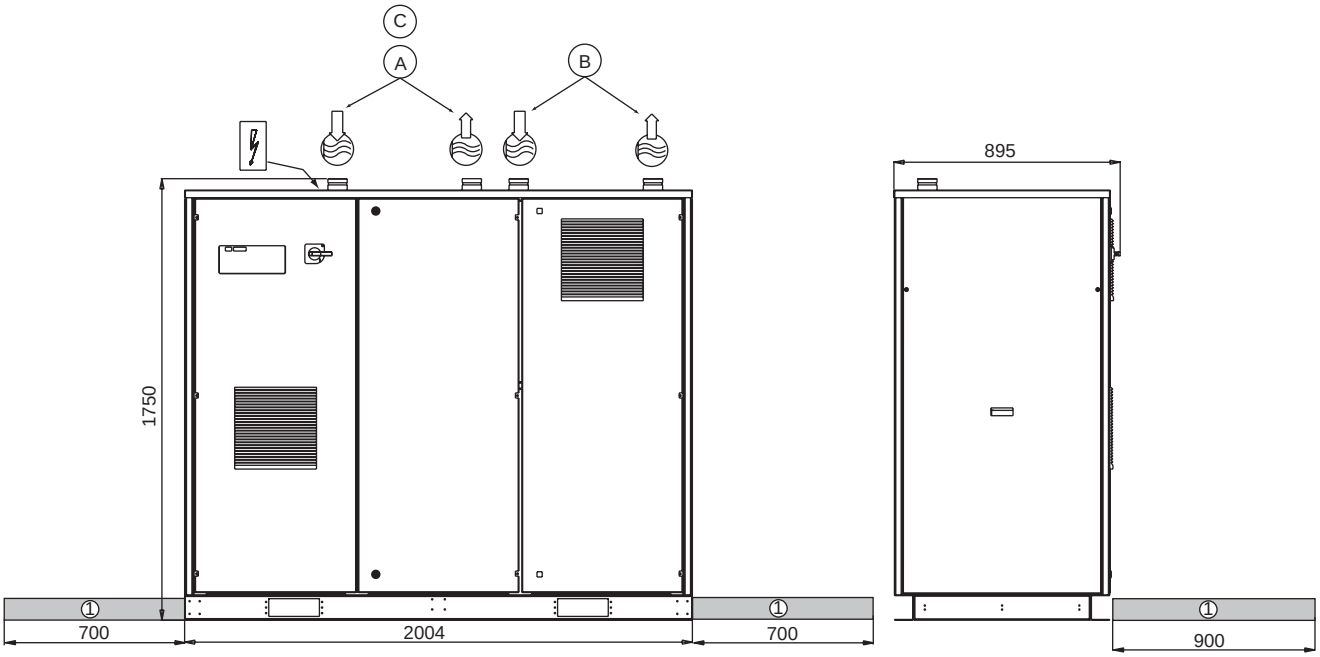

Note: Drawings are not contractually binding. Before designing an installation, consult the certified dimensional drawings, available on request.

Legend

All dimensions are given in mm.

- Water inlet
- Water outlet
- A Condenser (water inlet/outlet for 30RW unit)
- B Evaporator
- C Refrigerant inlet/outlet (30RWA units only)
- 1 Required clearances for maintenance
- Power supply

30RW/30RWA 160-300 - unit without hydronic module (standard)

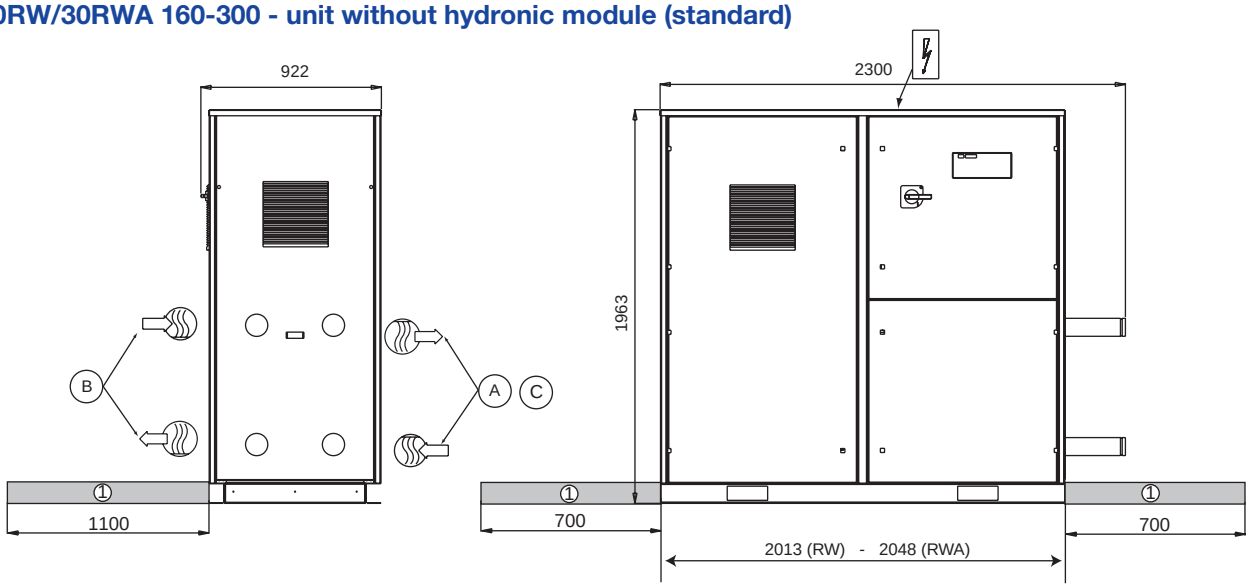

30RW/30RWA 160-300 - unit with hydronic module (option)

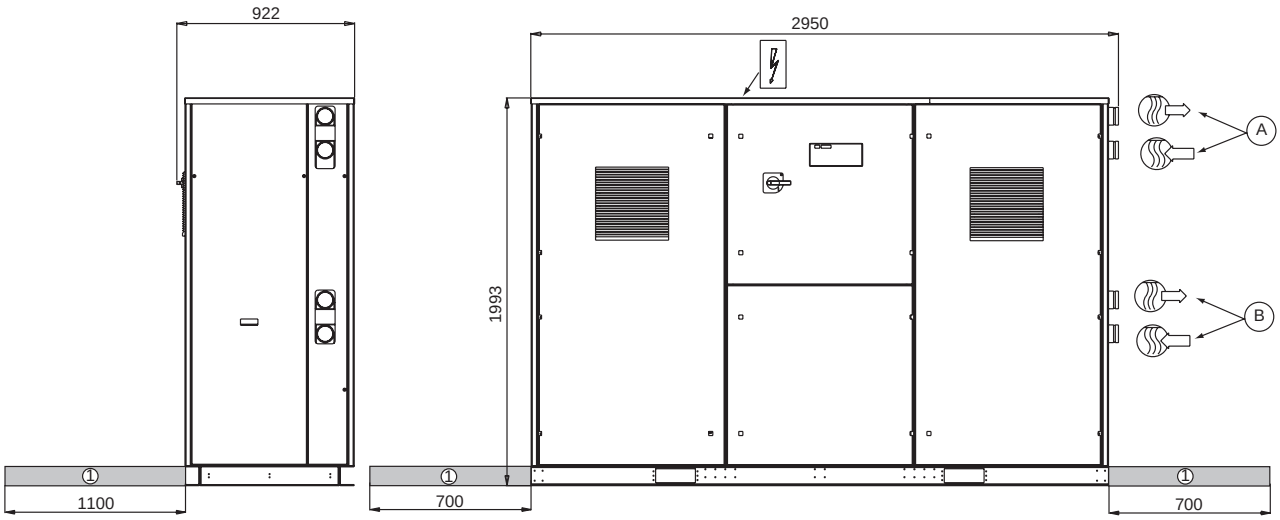

Note: Drawings are not contractually binding. Before designing an installation, consult the certified dimensional drawings, available on request.

Legend

All dimensions are given in mm.

- Water inlet
- Water outlet
- A Condenser (water inlet/outlet for 30RW unit)
- B Evaporator
- C Refrigerant inlet/outlet (30RWA units only)
- 1 Required clearances for maintenance
- Power supply

30HXC

Nominal cooling capacity 286-1302 kW

The 30HXC units are water-cooled chillers, designed from the ground up to meet the needs of today and tomorrow:

- Non-ozone depleting HFC-134a refrigerant
- Screw compressors
- Fits through a standard door with no disassembly required- - mechanically cleanable evaporators and condensers

All units are equipped with Pro-Dialog Plus control to optimise the efficiency of the refrigerant circuit.

Physical data

EUROVENT CERTIFIED PERFORMANCE
www.eurovent-certification.com

Cooling

30HXC				080	090	100	110	120	130	140	155	175	190	200	230	260	285	310	345	375
Full load performances*	C1	Nominal capacity	kW	287	312	348	375	413	450	510	543	600	652	701	814	899	987	1109	1207	1302
	C1	EER	kW/kW	5.03	4.79	4.82	4.60	4.87	4.72	4.74	4.57	4.68	4.73	4.74	4.74	4.46	4.77	4.76	4.56	4.66
	C1	Eurovent Energy Class		B	B	B	C	B	B	B	C	B	B	B	B	C	B	B	C	B
Seasonal Efficiency*		ESEER	kW/kW	5.56	5.41	5.31	5.28	5.23	5.21	5.17	4.85	5.03	4.97	5.08	5.06	5.01	5.11	5.49	5.39	5.34
Sound Power Level Standard Unit			dB(A)	94	94	94	94	94	97	98	100	101	101	99	101	102	102	103	104	104
Operating weight			kg	2274	2279	2302	2343	2615	2617	2702	2712	3083	3179	3873	4602	4656	4776	5477	5553	5721
Dimensions, standard unit																				
Depth			mm	2558	2558	2558	2565	3275	3275	3275	3275	3275	3275	3903	3924	3924	3924	4533	4533	4533
Length			mm	980	980	980	980	980	980	980	980	980	980	1015	1015	1015	1015	1015	1015	1015
Height			mm	1800	1800	1800	1850	1816	1816	1816	1816	1940	1940	1980	2060	2060	2060	2112	2112	2112
Refrigerant				R-134a																
Compressors				06N semi-hermetic twin-screw compressor																
Quantity - Circuit A				1	1	1	1	1	1	1	1	1	1	2	2	2	2	2	2	2
Quantity - Circuit B				1	1	1	1	1	1	1	1	1	1	1	1	1	1	2	2	2
Capacity control				Pro-Dialog Plus control																
No. of control steps				6	6	6	6	6	6	6	6	6	6	8	8	8	8	10	10	10
Evaporator				Shell and tube with internally finned copper tubes																
Water connections				Victaulic																
Inlet/outlet			in	4	4	4	5	5	5	5	5	5	5	6	6	6	6	8	8	8
Condenser				Shell and tube with internally finned copper tubes																
Water connections				Victaulic																
Inlet/outlet			in	5	5	5	5	5	5	5	5	6	6	6	8	8	8	8	8	8

C1 Cooling mode conditions: Evaporator Water heat exchanger, entering/leaving temperature 12°C/7°C, fouling factor 0 m^2 K/W. Condenser Water heat exchanger, entering/leaving temperature 30°C/35°C, fouling factor 0 m^2 K/W.
* In accordance with standard EN14511-3:2013
Weight shown is a guideline only. The dimensions shown are for the standard unit. For other unit types please refer to the dimensional drawings.

Eurovent certified data

Electrical data

30HXC		080	090	100	110	120	130	140	155	175	190	200	230	260	285	310	345	375
Power circuit																		
Nominal power supply (Un)*	V-ph-Hz	400-3-50 ± 10%																
Control circuit supply		The control circuit is supplied via the factory-installed transformer																
Nominal current drawn*	A	101	115	127	143	149	168	190	207	226	234	255	294	337	354	399	448	477
Maximum starting current***	A	181	206	223	249	267	298	333	355	382	442	841	978	1027	1200	1129	1184	1373
Circuit A**	A	-	-	-	-	-	-	-	-	-	-	712	822	871	1028	844	871	1028
Circuit B**	A	-	-	-	-	-	-	-	-	-	-	605	715	715	856	844	871	1028

* Standard Eurovent conditions: Evaporator entering/leaving water temperature 12°C and 7°C. Condenser entering/leaving water temperature 30°C/35°C.
** Maximum unit operating current at maximum unit power input.
*** Maximum instantaneous starting current (maximum operating current of the smallest compressor(s) + locked rotor current or reduced starting current of the largest compressor).

Options

Options	No.	Description	Advantages	Use 30HXC
Low-temperature brine solution	6	Low-temperature glycol solution production down to -10°C	Covers specific applications such as ice storage and industrial processes	090, 110, 130, 155, 175, 200, 230, 260, 310, 345
IP44C electrical protection level	20	Control box tightness reinforced	Permits unit installation in more severe environments	080-375
Tropicalisation	22	Unit control box suitable for tropical climates	Reduced relative humidity in the control boxes for operation in tropical climates (warm and humid)	080-375
Soft starter	25	Electronic compressor starter	Reduced compressor start-up current	200-375
Cu/Ni condensers	33	Condenser tubes and tubes sheets in 90-10 Copper/Nickel alloy	Allows applications with sea water	080-375
Cu/Ni condensers + Sakaphen coated water boxes	34A	Condenser tubes and tubes sheets in 90-10 Copper/Nickel alloy and Sakaphen treatment inside water boxes	Allows applications with sea water, improved durability of water boxes	080-375
Unit supplied in two assembled parts	51	Unit supplied in two assembled parts. The unit is equipped with flanges that allow disassembly of the unit on site.	Facilitates installation in plant rooms with limited access	080-375
460-3-60 power supply	60	Power supply of 460 V-3 ph-60 Hz	Permits unit connection to a power network with specific characteristics	080-375
380-3-60 power supply	61	Power supply of 380 V-3 ph-60 Hz	Permits unit connection to a power network with specific characteristics	080-375
Evaporator pump electrical power/ control circuit	84	Unit equipped with an electrical power/control circuit for single evaporator pumps	Quick and easy installation	080-375
Dual evaporator pump electrical power/control circuit	84D	Unit equipped with an electrical power/control circuit for dual evaporator pumps	Quick and easy installation	080-375
Condenser pump electrical power/ control circuit	84R	Unit equipped with an electrical power/control circuit for single condenser pumps	Quick and easy installation	080-375
Compressor suction valve	92	Valve set for the compressor suction side to isolate it in the refrigerant circuit.	Simplified service and maintenance	080-375
Evaporator with one pass	100C	Evaporator with one pass on the water-side. Evaporator inlet and outlet on opposite sides.	Quick and easy installation. Reduced evaporator pressure losses.	080-375
Condenser with one pass	102C	Condenser with one pass on the water-side. Condenser inlet and outlet on opposite sides.	Quick and easy installation. Reduced condenser pressure losses.	080-375
21 bar evaporator	104	Reinforced evaporator for extension of the maximum water-side service pressure to 21 bar	Covers applications with a high water column (high buildings)	080-375
21 bar condenser	104A	Reinforced condenser for extension of the maximum water-side service pressure to 21 bar	Covers applications with a high water column (high buildings)	080-375
Reversed evaporator water connections	107	Evaporator with reversed water inlet/outlet	Simplification of the water piping	080-375
Reversed condenser water connections	107A	Condenser with reversed water inlet/outlet	Simplification of the water piping	080-375
JBus/ModBus gateway	148B	Two-directional communications board, complies with JBus/ModBus protocol	Easy connection by communication bus to a building management system	080-375
BacNet gateway	148C	Two-directional communications board, complies with BacNet protocol	Easy connection by communication bus to a building management system	080-375
LON gateway	148D	Two-directional communications board, complies with LON protocol	Easy connection by communication bus to a building management system	080-375
High condensing temperature	150	Increased condenser leaving water tempe-rature up to 63°C. Control of the condenser leaving water temperature.	Allows applications with high condensing temperature (for heat reclaim or dry cooler applications)	080-375
High condensing temperature in non-reversible applications	150A	Operation in heat pump mode only with condenser leaving water temperature up to 63°C.	Allows applications with high condensing temperature (for heat reclaim or dry cooler applications)	080-375
Control for low condensing temperature systems	152	Output signal (0-10 V) to control the condenser water inlet valve	Used for applications with cold water at condenser inlet (well water). In this case the valve controls the water entering temp. to maintain an acceptable condensing pressure.	080-375
RS 485 communication interface with open protocol	155	Additional RS 485 communication board	Communication via CCN protocol	080-375
Dual discharge valve installed with three-way valve	194	Three-way valve upstream of the discharge valves on the evaporator and the oil separator	Vallve change and inspection facilitated without refrigerant loss. Complies with European standard EN 378/BGVD4.	080-190
Code compliance for Switzerland in addition to PED code	197	Additional tests on the water heat exchangers. Additional supply of PED documents, supple-mentary certificates and test certificates.	Conformance with Swiss regulations in addition to the PED code	080-375
Russian code compliance	199	GOST certification	Conformance with Russian regulations (GOST)	080-375
Water connection kit for welded evaporator connections	266	Victaulic piping connections with welded joints.	Easy installation	080-375
Water connection kit for welded condenser connections	267	Victaulic piping connections with welded joints.	Easy installation	080-375
Water connection kit for flanged evaporator connections	268	Victaulic piping connections with flanged joints.	Easy installation	080-375
Water connection kit for flanged condenser connections	269	Victaulic piping connections with flanged joints.	Easy installation	080-375

Features and advantages

- Quality design and construction make the 30HXC unit the preferred choice.
- Non-controlled, Non-ozone depleting HFC-134a refrigerant.
- HCF-134a is a proven, non-toxic, non-flammable refrigerant.
- Medium-pressure refrigerant HFC-134a minimises stress on the compressors and ensures their long operating life.
- The 30HXC units are equipped with screw compressors for extremely quiet operation and low-vibration levels.
- The 30HXC units exceed the efficiency level of average industry standards for both full- and part-load operation, saving on operating costs, through lower electrical costs.
- Part of the 30HXC product range is available equipped with the very low temperature option that permits evaporator leaving water temperatures down to -10°C with ethylene glycol or down to -7°C with propylene glycol.
- The 30HXC control is fully automatic. The leaving water temperature is continuously monitored to detect load and flow changes. This combination provides the most precise temperature control available.
- Two independent refrigerant circuits - the second one takes over automatically, when the first one malfunctions, maintain-ing partial cooling under all circumstances.
- Easy installation - the 30HXC chillers are supplied with a full refrigerant charge, and conveniently located power supply and water inlet and outlet connections.
- Auto-diagnostics - quick display of the machine status.
- Multiple compressor concept for optimised part-load efficiency and minimised starting current.
- Series star/delta starter, limiting the start-up current on 30HXC 080-190 units.
- All units are also available as high condensing temperature and non-reversible heat pump versions (options 150 and 150A). Their application range is the same as for the standard units, on which they are based, but they also allow condenser leaving water temperatures of up to 63°C. Pro-Dialog control offers all the advantages of the standard units, plus control of the leaving condenser water temperature.

Easy installation

- The 30HXC has a compact design that fits through a standard door opening and requires minimal indoor space. The 30HXC is supplied as a complete package for easy installation. There are no extra controls, timers, starters or other items to install.
- 30HXC units have a single power point and one main disconnect/isolator switch for sizes 30HXC 080 to 190, and one power point and one main disconnect/ isolator switch per circuit for sizes 30HXC 200 to 375. The hydraulic connections are simple and facilitated by the use of Victaulic connections for the evaporator and condenser.

Simple to service

- Mechanically-cleanable evaporator and condenser
- Twin-screw compressors which require minimum routine service or maintenance.
- Easily accessed suction and discharge pressure and temperature information via a display module.

Controls

Pro-Dialog Plus control

Pro-Dialog Plus is an advanced numeric control system that combines intelligence with great operating simplicity.

Pro-Dialog Plus ensures intelligent leaving water temperature control and optimises energy requirements.

- The PID control algorithm with permanent compensation for the difference between the heat exchanger entering and leaving temperature, anticipates load variations, guarantees leaving water temperature stability and prevents unneces-sary compressor cycling.
- The long-stroke electronic expansion valves (EXV), together with refrigerant level control via heat exchange in the evaporator, allows a significant energy efficiency improvement at part load conditions, and faultless chiller operation in a wider temperature range.
- Adjustable ramp loading, according to the inertia of the application, avoids load increases that are too fast and too frequent, increasing unit life and limiting power consump-tion peaks.
- Several capacity loading possibilities ensure improved start-up at low outdoor air temperature, and permit use of one of the refrigerant circuits as a back-up circuit.

Pro-Dialog Plus ensures preventive protection and enhances chiller reliability.

- Equalisation of compressor operating hours
- No capillary tubes or pressostats (except as safety device)
- Pro-Dialog Plus monitors all chiller safety parameters.
- The fault history function and the fault codes facilitate immediate location of faults and in certain cases the condi-tions causing the alarm. Prognostic and preventive mainte-nance functions (incorrect water loop, oil filter dirty etc.) permit anticipation of possible problems.

Pro-Dialog Plus operator interface

Operating limits, standard units

Condenser water flow rates

30HXC	Minimum flow rate, l/s*		Maximum flow rate, l/s**
	Open loop	Closed loop	
080-110	2.3	7	28.2
120-130	3.1	9.3	37.1
140-155	3.7	11.1	44.5
175-190	4.3	13	51.9
200	4.9	14.8	59.2
230-285	6.7	20.1	80.4
310-375	8	24	95.9

* Based on a velocity of 0.3 m/s in a closed loop and 0.9 m/s in an open loop.
** Based on a water velocity of 3.6 m/s.

Evaporator water flow rates

30HXC	Minimum flow rate, l/s	Maximum flow rate, l/s*
080-090	5.2	20.8
100	6.5	25.9
110	7.4	29.6
120-130	8.3	33.4
140-155	9.4	37.8
175-190	11.5	45.9
200	14.1	56.3
230	16.3	65.2
260-285	18.3	73.4
310	20.9	83.7
345-375	23	91.9

* The maximum flow rate corresponds to a pressure drop of 100 kPa.

Operating range, standard units

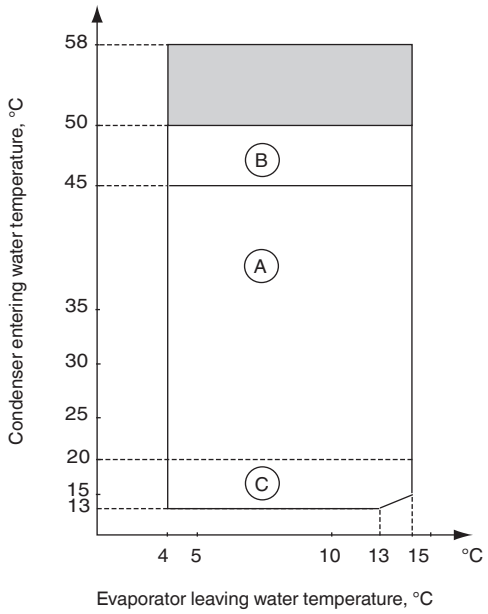

Notes:
1. Evaporator and condenser Δ T = 5 K
2. For start-up at full load with a condenser water entering temperature below 20°C, a three-way valve must be used to maintain the correct condensing temperature.
3. Maximum condenser water leaving temperature 50°C (at full load).
4. For low evaporator leaving water temperatures <+4°C and >-10°C please order option 6.

A Standard unit operating at full load.
B Standard unit operating at reduced load.
C Units operating with head pressure control with analogue water control valve. For transient operating modes (start-up and part load) the unit can operate down to a condenser entering water temperature of 13°C.

Additional operating range for high condensing temperature units and non-reversible heat pumps.

Operating limits, units for very low temperature (option 6)

Evaporator water flow rate with 35% ethylene glycol

30HXC	Minimum flow rate, l/s*	Maximum flow rate, l/s**
090	8	15.7
110	10.6	21.3
130	12.4	25.1
155	14.5	28.1
175	15.6	33
200	20.5	38
230	21	39.7
260	24.1	48.3
310	29.6	62
345	30.2	63

* Based on a Reynolds number of 4000.
** Based on a water velocity of 3.6 m/s.

Evaporator water flow rate with 30% propylene glycol

30HXC	Minimum flow rate, l/s*	Maximum flow rate, l/s**
090	11.1	15.7
110	14.2	21.3
130	16.7	25.1
155	19.1	28.1
175	21.1	33
200	25.1	38
230	27.4	39.7
260	32.3	48.3
310	40	62
345	40.6	63

* Based on a Reynolds number of 4000.
** Based on a water velocity of 3.6 m/s.

For very low temperature applications the amount of antifreeze solution added is critical for the unit operation. The following amounts are required:

Evaporator leaving water temperature, °C	Ethylene glycol, %	Propylene glycol, %
-6	25	27
-7	28	30
-8	30	NA
-9	33	NA
-10	35	NA

Operating range, units for very low temperature (option 6)

Operating range 35% ethylene glycol

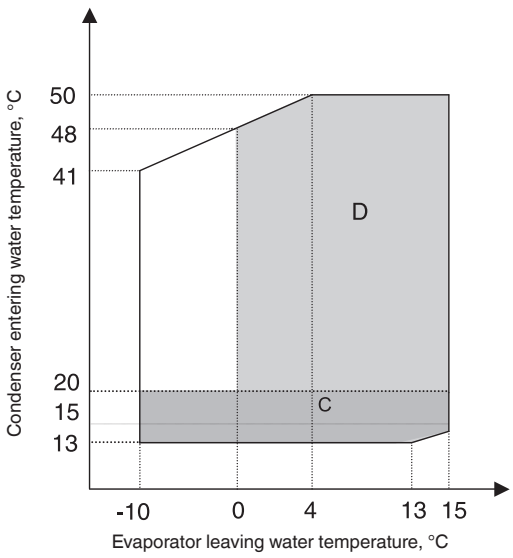

Operating range 30% propylene glycol

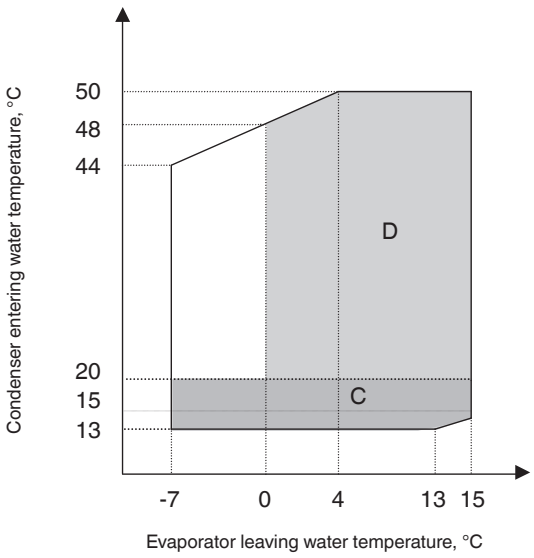

Notes:
1. Evaporator ΔT = 4 K max. - condenser ΔT = 5 K
2. Operating range applicable for full and reduced load.
3. At full load with a condenser water entering temperature below 20°C, a three-way valve must be used to maintain the correct condensing temperature.

Legend
C Unit operating with condensing pressure control with an analogue water control valve. For transient operating modes (start-up and part load), the unit can operate down to a condenser entering water temperature of 13°C.
D Operation permitted, but performance is not optimised.

Dimensions/clearances

The 30HXC fits through a standard door opening, minimising installation cost.

30HXC 080-190

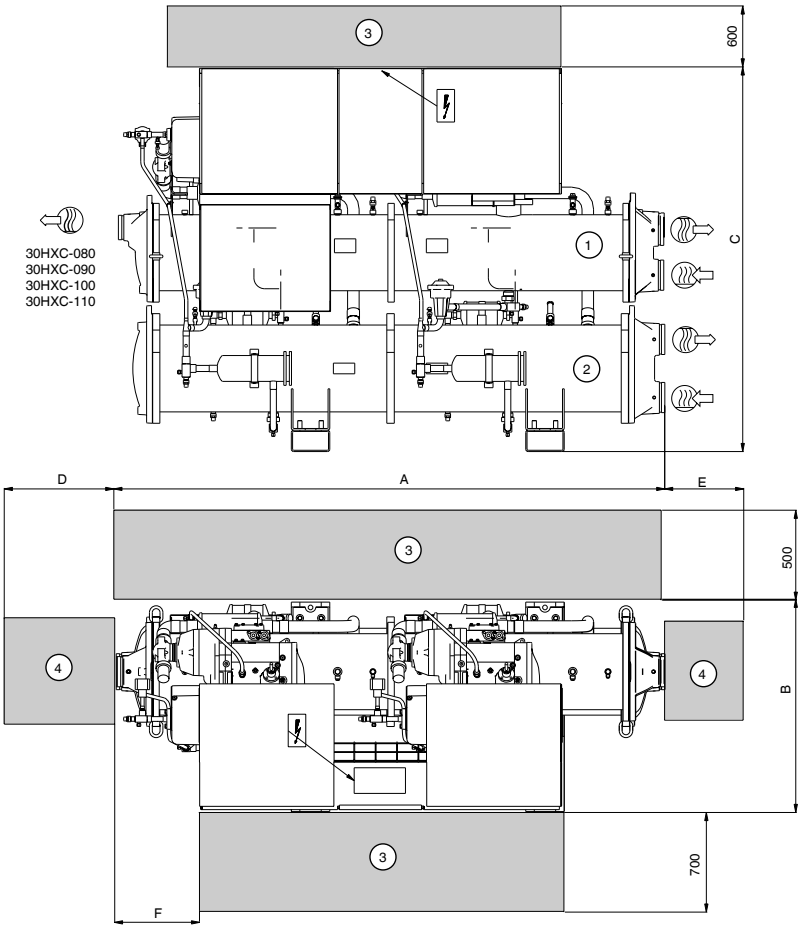

Legend
All dimensions are given in mm.

1. Evaporator
2. Condenser
3. Required clearances for maintenance
4. Recommended space for tube removal (clearances D and E can be either on the right or the left-hand side).

Water outlet

Water inlet

5 Power supply connection

Notes:
Non-certified drawings.
Refer to the certified dimensional drawings supplied with the unit or available on request, when designing an installation.

For the location of fixing points, weight distribution and coordinates of the centre of gravity refer to the certified dimensional drawings.

30HXC	A	B	C	D	E	F
080-100	2558	980	1800	2200	1000	385
110	2565	980	1850	2200	1000	385
120-155	3275	980	1816	2990	1000	689
175-190	3275	980	1940	2990	1000	689

30HXC 200-375

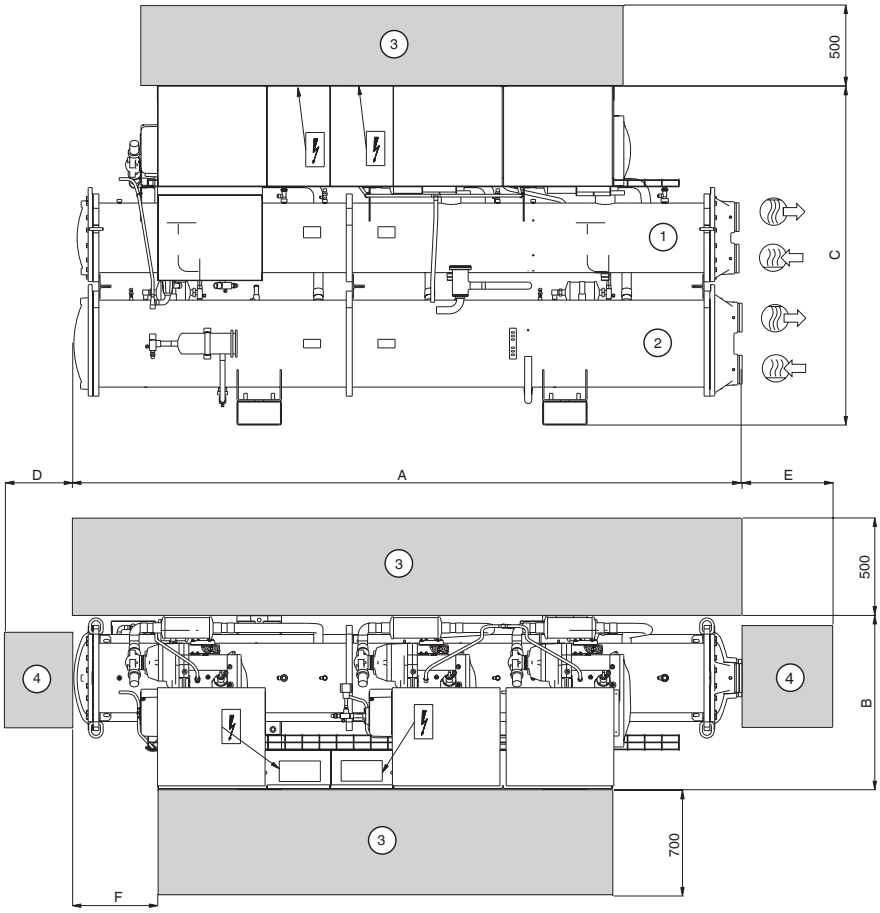

Legend
All dimensions are given in mm.

1. Evaporator
2. Condenser
3. Required clearances for maintenance
4. Recommended space for tube removal (clearances D and E can be either on the right or the left-hand side).

Water outlet

Water inlet

5 Power supply connection

Notes:
Non-certified drawings.
Refer to the certified dimensional drawings supplied with the unit or available on request, when designing an installation.

For the location of fixing points, weight distribution and coordinates of the centre of gravity refer to the certified dimensional drawings.

30HXC	A	B	C	D	E	F
200	3903	1015	1980	3600	1000	489
230-285	3924	1015	2060	3600	1000	489
310-375	4533	1015	2112	4200	1000	503

30XW

Nominal cooling capacity 273-1756 kW

AQUAFORCE

Multi Tiering: entry and premium efficiency

Available for cooling (30XW) or heating (30XWH) operation

Wide operating envelope: down to -12°C chilled liquid temperature, up to +63°C hot water temperature

Compactness: less than 1.2 m width up to 1600 kW

The 30XW liquid chillers are the premium solution for industrial and commercial applications where installers, consultants and building owners require optimal perfor-mances and maximum quality.

The 30XW liquid chillers are designed to meet current and future requirements in terms of energy efficiency, flexibility of use and compactness. They use the most reliable technologies available today:

- Twin-rotor screw compressors with a variable capacity valve
- Single refrigerant R-134a
- Pro-Dialog control system
- Flooded heat exchangers that are mechanically cleanable

To meet to all environmental and economic requirements, the 30XW is available in two efficiency classes:

- Standard-efficiency 30XW units that offer an optimised balance of technical and economical aspects, while at the same time boasting superior energy efficiency.
- High-efficiency 30XW-P units that offer unequalled energy efficiency to satisfy the most stringent demands of building owners wanting to reduce operating costs to the minimum.

Physical data

EUROVENT CERTIFIED PERFORMANCE
www.eurovent-certification.com

Standard-efficiency units 30XW--		254	304	354	402	452	552	602	652	702	802
Cooling											
Air conditioning application as per EN14511-3:2013† - standard unit											
Condition 1											
Nominal cooling capacity	kW	273	307	359	459	473	532	538	677	730	792
ESEER	kW/kW	5.67	5.58	5.58	5.75	5.77	5.78	5.66	6.06	6.02	5.79
EER	kW/kW	5.32	5.30	5.24	5.21	5.35	5.21	5.17	5.39	5.30	5.19
Eurovent class cooling	-	A	A	A	A	A	A	A	A	A	A
Air conditioning application †† - standard unit											
Condition 1											
Nominal cooling capacity	kW	273	308	360	461	474	534	539	679	733	795
ESEER	kW/kW	6.18	6.09	6.14	6.28	6.29	6.46	6.33	6.76	6.79	6.63
EER	kW/kW	5.54	5.52	5.48	5.42	5.57	5.46	5.43	5.65	5.58	5.50
Sound levels - standard unit											
Sound power level*	dB(A)	95	95	95	99	99	99	99	99	99	99
Sound pressure level at 1 m**	dB(A)	78	78	78	82	82	82	82	82	82	82
Sound levels - standard unit + option 257* **											
Sound power level*	dB(A)	-	-	-	96	96	96	96	96	96	96
Sound pressure level at 1 m**	dB(A)	-	-	-	78	78	78	78	78	78	78
Dimensions - standard unit											
Length	mm	2724	2724	2724	2741	2741	2741	2741	3059	3059	3059
Width	mm	928	928	928	936	936	936	936	1040	1040	1040
Height	mm	1567	1567	1567	1692	1692	1692	1692	1848	1848	1848
Operating weight** **	kg	2017	2036	2072	2575	2575	2613	2644	3247	3266	3282
Compressors		Semi-hermetic 06T screw compressors, 50 r/s									
Circuit A	-	1	1	1	1	1	1	1	1	1	1
Circuit B	-	-	-	-	-	-	-	-	-	-	-
Refrigerant** ** - standard unit		R-134a									
Circuit A	kg	84	80	78	82	82	82	82	145	140	135
Circuit B	kg	-	-	-	-	-	-	-	-	-	-
Global Warming Potential (GWP)											
Tonnes of equivalent CO_2 of greatest circuit	tonnes	120	114	112	117	117	117	117	207	200	193
Capacity control		Touch Pilot, electronic expansion valves (EXV)									
Minimum capcity	%	15	15	15	15	15	15	15	15	15	15
Evaporator		Multi-pipe flooded type									
Water volume	l	50	56	61	70	70	70	70	109	109	109
Water connections (Victaulic)	in	5	5	5	5	5	5	5	6	6	6
Drain and vent connections (NPT)	in	3/8	3/8	3/8	3/8	3/8	3/8	3/8	3/8	3/8	3/8
Max. water-side operating pressure	kPa	1000	1000	1000	1000	1000	1000	1000	1000	1000	1000
Condenser		Multi-pipe flooded type									
Water volume	l	55	55	55	76	76	76	76	109	109	109
Water connections (Victaulic)	in	5	5	5	5	5	5	5	6	6	6
Drain and vent connections (NPT)	in	3/8	3/8	3/8	3/8	3/8	3/8	3/8	3/8	3/8	3/8
Max. water-side operating pressure	kPa	1000	1000	1000	1000	1000	1000	1000	1000	1000	1000

† Eurovent-certified performances in accordance with standard EN14511-3:2013.
†† Gross performances, not in accordance with EN14511-3:2013. These performances do not take into account the correction for the proportional heating capacity and power input generated by the water pump to overcome the internal pressure drop in the heat exchanger.
Condition 1 : Cooling mode conditions, evaporator water entering/leaving temperature 12°C/7°C, condenser water entering/leaving temperature 30°C/35°C, evaporator fouling factor 0 m².K/W.
Condition 2: Cooling mode conditions, condenser water entering/leaving temperature 40°C/45°C, evaporator water entering/leaving temperature 10°C/7°C, evaporator fouling factor 0 m².K/W.
* In dB ref=10^{-12} W, (A) weighting. Declared dualnumber noise emission values in accordance with ISO 4871 (with an associated uncertainty of +/-3dB(A)). Measured in accordance with ISO 9614-1 and certified by Eurovent.
** In dB ref 20µPa, (A) weighting. Declared dualnumber noise emission values in accordance with ISO 4871 (with an associated uncertainty of +/-3dB(A)). For information, calculated from the sound power level Lw(A).
*** Option 257 = Low noise level.
**** Weight shown is guideline only. Please refer to the unit nameplate.

Eurovent certified data

Standard-efficiency units

Standard-efficiency units 30XW--		852	1002	1052	1154	1252	1352	1452	1552	1652	1702
Cooling											
Air conditioning application as per EN14511-3:2013† - standard unit											
Condition 1											
Nominal cooling capacity	kW	839	1017	1060	1141	1257	1342	1453	1547	1654	1728
ESEER	kW/kW	5.94	6.30	6.34	6.23	6.73	6.44	6.27	6.06	6.40	6.34
EER	kW/kW	5.39	5.26	5.21	5.30	5.69	5.51	5.36	5.29	5.59	5.60
Eurovent class cooling	-	A	A	A	A	A	A	A	-	-	-
Air conditioning application †† - standard unit											
Condition 1											
Nominal cooling capacity	kW	843	1021	1066	1146	1262	1349	1461	1557	1664	1739
ESEER	kW/kW	6.65	7.36	7.56	7.49	7.69	7.46	7.42	7.29	7.58	7.59
EER	kW/kW	5.66	5.56	5.53	5.64	5.97	5.82	5.71	5.67	5.96	6.00
Sound levels - standard unit											
Sound power level*	dB(A)	99	102	102	102	102	102	102	102	102	102
Sound pressure level at 1 m**	dB(A)	82	84	84	84	83	83	83	83	83	83
Sound levels - standard unit + option 257* **											
Sound power level*	dB(A)	96	99	99	99	99	99	99	99	99	99
Sound pressure level at 1 m**	dB(A)	78	80	80	80	80	80	80	80	80	80
Dimensions - standard unit											
Length	mm	2780	4025	4025	4025	4730	4730	4730	4730	4790	4790
Width	mm	1042	1036	1036	1036	1156	1156	1156	1156	1902	1902
Height	mm	1898	1870	1870	1925	2051	2051	2051	2051	1515	1515
Operating weight** **	kg	3492	5370	5408	5698	7066	7267	7305	7337	8681	8699
Compressors											
Circuit A	-	1	1	1	1	1	1	1	1	1	1
Circuit B	-	-	1	1	1	1	1	1	1	1	1
Refrigerant** ** - standard unit**											
Circuit A	kg	140	85	85	105	120	115	110	105	195	195
Circuit B	kg	-	85	85	105	120	115	110	105	195	195
Global Warming Potential (GWP)											
Tonnes of equivalent CO_2 of greatest circuit	tonnes	200	122	122	150	172	164	157	150	279	279
Capacity control											
Minimum capcity	%	15	10	10	10	10	10	10	10	10	10
Evaporator											
Water volume	l	98	182	182	205	301	301	301	301	354	354
Water connections (Victaulic)	in	6	6	6	8	8	8	8	8	8	8
Drain and vent connections (NPT)	in	3/8	3/8	3/8	3/8	3/8	3/8	3/8	3/8	3/8	3/8
Max. water-side operating pressure	kPa	1000	1000	1000	1000	1000	1000	1000	1000	1000	1000
Condenser											
Water volume	l	137	193	193	193	340	340	340	340	426	426
Water connections (Victaulic)	in	8	8	8	8	8	8	8	8	8	8
Drain and vent connections (NPT)	in	3/8	3/8	3/8	3/8	3/8	3/8	3/8	3/8	3/8	3/8
Max. water-side operating pressure	kPa	1000	1000	1000	1000	1000	1000	1000	1000	1000	1000

† Eurovent-certified performances in accordance with standard EN14511-3:2013.
† † Gross performances, not in accordance with EN14511-3:2013. These performances do not take into account the correction for the proportional heating capacity and power input generated by the water pump to overcome the internal pressure drop in the heat exchanger.
Condition 1 : Cooling mode conditions, evaporator water entering/leaving temperature 12°C/7°C, condenser water entering/leaving temperature 30°C/35°C, evaporator fouling factor 0 m^2.K/W.
Condition 2: Cooling mode conditions, condenser water entering/leaving temperature 40°C/45°C, evaporator water entering/leaving temperature 10°C/7°C, evaporator fouling factor 0 m^2.K/W.
* In dB ref=10^{-12} W, (A) weighting. Declared dualnumber noise emission values in accordance with ISO 4871 (with an associated uncertainty of +/-3dB(A)). Measured in accordance with ISO 9614-1 and certified by Eurovent.
** In dB ref 20µPa, (A) weighting. Declared dualnumber noise emission values in accordance with ISO 4871 (with an associated uncertainty of +/-3dB(A)). For information, calculated from the sound power level Lw(A).
*** Option 257 = Low noise level.
**** Weight shown is guideline only. Please refer to the unit nameplate.

Eurovent certified data

Physical data

High-efficiency units 30XW-P		512	562	712	812	862	1012	1162	1314	1464	1612	1762
Cooling												
Air conditioning application as per EN14511-3:2013† - standard unit												
Condition 1												
Nominal cooling capacity	kW	509	577	737	786	861	1039	1157	1323	1452	1626	1756
ESEER	kW/kW	6.09	6.14	6.41	6.24	6.17	6.74	6.83	6.65	6.36	6.80	6.60
EER	kW/kW	5.71	5.64	5.83	5.62	5.65	5.73	5.78	5.80	5.58	5.87	5.79
Eurovent class cooling	-	A	A	A	A	A	A	A	A	A	-	-
Air conditioning application †† - standard unit												
Condition 1												
Nominal cooling capacity	kW	510	578	739	788	863	1042	1161	1329	1459	1632	1764
ESEER	kW/kW	6.61	6.77	6.94	6.83	6.84	7.47	7.89	7.70	7.48	7.65	7.52
EER	kW/kW	5.94	5.89	6.04	5.85	5.92	5.95	6.07	6.13	5.93	6.13	6.08
Sound levels - standard unit												
Sound power level*	dB(A)	99	99	99	99	99	102	102	102	102	102	102
Sound pressure level at 1 m**	dB(A)	82	82	81	81	81	83	83	83	83	83	83
Sound levels - standard unit + option 257* **												
Sound power level*	dB(A)	96	96	96	96	96	99	99	99	99	99	99
Sound pressure level at 1 m**	dB(A)	78	78	78	78	78	80	80	80	80	80	80
Dimensions - standard unit												
Length	mm	3059	3059	3290	3290	3290	4730	4730	4730	4730	4832	4832
Width	mm	936	936	1069	1069	1069	1039	1039	1162	1162	2129	2129
Height	mm	1743	1743	1950	1950	1950	1997	1997	2051	2051	1562	1562
Operating weight** **	kg	2981	3020	3912	3947	3965	6872	6950	7542	7752	10910	10946
Compressors		Semi-hermetic 06T screw compressors, 50 r/s										
Circuit A	-	1	1	1	1	1	1	1	1	1	1	1
Circuit B	-	-	-	-	-	-	1	1	1	1	1	1
Refrigerant** - standard unit**		R-134a										
Circuit A	kg	130	130	180	175	170	120	120	130	130	240	250
Circuit B	kg	-	-	-	-	-	120	120	150	130	240	250
Global Warming Potential (GWP)												
Tonnes of equivalent CO_2 of greatest circuit	tonnes	186	186	257	250	243	172	172	215	186	343	358
Capacity control		Touch Pilot, electronic expansion valves (EXV)										
Minimum capcity	%	15	15	15	15	15	10	10	10	10	10	10
Evaporator		Multi-pipe flooded type										
Water volume	l	101	101	154	154	154	293	293	321	321	473	473
Water connections (Victaulic)	in	6	6	8	8	8	8	8	8	8	10	10
Drain and vent connections (NPT)	in	3/8	3/8	3/8	3/8	3/8	3/8	3/8	3/8	3/8	3/8	3/8
Max. water-side operating pressure	kPa	1000	1000	1000	1000	1000	1000	1000	1000	1000	1000	1000
Condenser		Multi-pipe flooded type										
Water volume	l	103	103	148	148	148	316	316	340	340	623	623
Water connections (Victaulic)	in	6	6	8	8	8	8	8	8	8	10	10
Drain and vent connections (NPT)	in	3/8	3/8	3/8	3/8	3/8	3/8	3/8	3/8	3/8	3/8	3/8
Max. water-side operating pressure	kPa	1000	1000	1000	1000	1000	1000	1000	1000	1000	1000	1000

† Eurovent-certified performances in accordance with standard EN14511-3:2013.
† † Gross performances, not in accordance with EN14511-3:2013. These performances do not take into account the correction for the proportional heating capacity and power input generated by the water pump to overcome the internal pressure drop in the heat exchanger.
Condition 1 : Cooling mode conditions, evaporator water entering/leaving temperature 12°C/7°C, condenser water entering/leaving temperature 30°C/35°C, evaporator fouling factor 0 m².K/W.
Condition 2: Cooling mode conditions, condenser water entering/leaving temperature 40°C/45°C, evaporator water entering/leaving temperature 10°C/7°C, evaporator fouling factor 0 m².K/W.
* In dB ref=10^{-12} W, (A) weighting. Declared dualnumber noise emission values in accordance with ISO 4871 (with an associated uncertainty of +/-3dB(A)). Measured in accordance with ISO 9614-1 and certified by Eurovent.
** In dB ref 20µPa, (A) weighting. Declared dualnumber noise emission values in accordance with ISO 4871 (with an associated uncertainty of +/-3dB(A)). For information, calculated from the sound power level Lw(A).
*** Option 257 = Low noise level.
**** Weight shown is guideline only. Please refer to the unit nameplate.

Eurovent certified data

Electrical data

Standard-efficiency units 30XW--		254	304	354	402	452	552	602	652	702	802
Nominal power supply, all units	V-ph-Hz	400-3-50 ± 10%									
Control circuit, all units		24 V via the built-in transformer									
Maximum start-up current*											
Circuit A	A	233	233	303	414	414	414	414	587	587	587
Circuit B	A	-	-	-	-	-	-	-	-	-	-
Maximum power input**											
Circuit A	kW	76	89	97	128	135	151	151	184	200	223
Circuit B	kW	-	-	-	-	-	-	-	-	-	-
Maximum current drawn (Un)**											
Circuit A	A	123	145	160	206	217	242	242	295	317	351
Circuit B	A	-	-	-	-	-	-	-	-	-	-

Standard-efficiency units 30XW--		852	1002	1052	1154	1252	1352	1452	1552	1652	1702
Nominal power supply, all units	V-ph-Hz	400-3-50 ± 10%									
Control circuit, all units		24 V via the built-in transformer									
Maximum start-up current*											
Circuit A	A	587	414	414	414	587	587	587	587	587	587
Circuit B		-	414	414	414	414	587	587	587	587	587
Maximum power input**											
Circuit A	kW	223	150	151	151	184	184	200	223	223	223
Circuit B		-	135	151	151	151	184	200	223	202	223
Maximum current drawn (Un)**											
Circuit A	A	351	242	242	242	295	295	317	351	351	351
Circuit B		-	217	242	242	242	295	317	351	317	351

High-efficiency units 30XW-P		512	562	712	812	862	1012	1162	1314	1464	1612	1762
Maximum start-up current*												
Circuit A/B	A	414/-	414/-	587/-	587/-	587/-	414/414	414/414	587/414	587/587	587/587	587/587
Maximum power input**												
Circuit A/B	kW	135/-	151/-	184/-	200/-	223/-	134/134	151/151	184/151	184/184	200/200	223/223
Maximum current drawn (Un)**												
Circuit A/B	A	217/-	242/-	295/-	317/-	351/-	217/217	242/242	295/242	295/295	317/317	351/351

* Instantaneous start-up current (maximum operating current of the smallest compressor(s) + locked rotor current or reduced start-up current of the largest compressor). Values obtained at operation with maximum unit power input.

** Values obtained at operation with maximum unit power input. Values given on the unit name plate.

Options

Options	No.	Description	Advantages	Use 30XW
Medium-temperature brine solution	5	Implementation of new algorithms of control and evaporator redesign to allow chilled brine solution production down to -6°C when ethylene glycol is used (-3°C with propylene glycol)	Covers specific applications such as ice storage and industrial processes	Only sizes 512/562/ 1012/1154
Low-temperature brine solution	6	Implementation of new algorithms of control and evaporator redesign to allow chilled brine solution production down to -12°C when ethylene glycol is used (-8°C with propylene glycol)	Covers specific applications such as ice storage and industrial processes	Only sizes 512/562/ 1012/1154
Light-brine solution, down to -3°C	8	Implementation of new algorithms of control to allow chilled brine solution production down to -3°C when ethylene glycol is used (0°C with propylene glycol)	Matches with most application requirements for ground-sourced heat pumps and fits with many industrial processes requirements	254-1762
Unit supplied in two assembled parts	51	The unit is equipped with flanges that allow disassembly of the unit on site	Facilitates installation in plant rooms with limited access	Only sizes 1612/1652/ 1702/1762
Master/slave operation	58	Unit equipped with supplementary water outlet temperature sensor kit to be field-installed allowing master/slave operation of two units connected in parallel	Optimised operation of two chillers connected in parallel with operating time equalisation	254-1762
Single power connection point	81	Unit power connection via one main supply connection	Quick and easy installation	1002-1762
No disconnect switch, but short circuit protection	82A	Unit without disconnect switch, but with short-circuit protection device	Permits an external electrical disconnect system for the unit (field-supplied), while ensuring unit short circuit protection	254-1762
Evaporator pump electrical power / control circuit	84	Unit equipped with an electrical power and control circuit for one pump evaporator side	Quick and easy installation: the control of fixed speed pumps is embedded in the unit control	252-1252, 1314
Evaporator dual pumps electrical power / control circuit	84D	Unit equipped with an electrical power and control circuit for two pumps evaporator side	Quick and easy installation: the control of fixed speed pumps is embedded in the unit control	252-1252, 1314
Condenser pump electrical power / control circuit	84R	Unit equipped with an electrical power and control circuit for one pump condenser side	Quick and easy installation: the control of fixed speed pumps is embedded in the unit control	252-1252, 1314
Condenser insulation	86	Thermal condenser insulation	Minimizes thermal dispersions condenser side (key option for heat pump or heat recovery applications) and allows compliancy with special installation criteria (hot parts insulated)	254-1762
Service valve set	92	Liquid line valve (evaporator inlet) and compressor suction line valve	Allow isolation of various refrigerant circuit components for simplified service and maintenance	254-1762
Evaporator with one pass	100C	Evaporator with one pass on the water side. Evaporator inlet and outlet on opposite sides.	Easy to install, depending on site. Reduced pressure drops	254-1762
Condenser with one pass	102C	Condenser with one pass on the water side. Condenser inlet and outlet on opposite sides.	Easy to install, depending on site. Reduced pressure drops	254-1762
21 bar evaporator	104	Reinforced evaporator for extension of the maximum water-side service pressure to 21 bar (standard 10 bar)	Covers applications with a high water column evaporator side (typically high buildings)	254-1762
21 bar condenser	104A	Reinforced condenser for extension of the maximum water-side service pressure to 21 bar (standard 10 bar)	Covers applications with a high water column condenser side (typically high buildings)	254-1762
Reversed evaporator water connections	107	Evaporator with reversed water inlet/outlet	Easy installation on sites with specific requirements	254-1762
Reversed condenser water connections	107A	Condenser with reversed water inlet/outlet	Easy installation on sites with specific requirements	254-1762
JBus gateway	148B	Two-directional communication board complying with JBus protocol	Connects the unit by communication bus to a building management system	254-1762
LON gateway	148D	Two-directional communication board complying with Lon Talk protocol	Connects the unit by communication bus to a building management system	254-1762
Bacnet over IP gateway	149	Two-directional high-speed communication using BACnet protocol over Ethernet network (IP)	Easy and high-speed connection by ethernet line to a building management system. Allows access to multiple unit parameters	254-1762
High condensing temperature	150	Optimized compressor for operation at high condensing temperature	Increased condenser leaving water temperature up to 63°C. Allows applications with high condensing temperature (heat pumps, installations with not generously sized dry-coolers or more generally, installations with dry-coolers in hot climate). NOTE: to ensure control of the condenser leaving water temperature, this option must be fitted with 30XWH units.	254-1762
Condensing temperature limitation	150B	Limitation of the maximum condenser leaving water temperature to 45°C	Reduced maximum power input and current absorption: power cables and protection elements can therefore be downsized	254-1762

Options	No.	Description	Advantages	Use 30XW
Control for low condensing temperature systems	152	Output signal (0-10 V) to control the condenser water inlet valve	Simple installation: for applications with cold water at condenser inlet (ex. ground-source, groundwater-source, superficial water-source applications) the signal permits to control a 2 or 3-way valve to maintain condenser water temperature (and so condensing pressure) at acceptable values	254-1762
Energy Management Module EMM	156	Control board with additional inputs/outputs. See Energy Management Module option chapter	Extended remote control capabilities (Set-point reset, ice storage end, demand limits, boiler on/ off command...)	254-1762
Touch Pilot control, 7" user interface	158A	Touch Pilot control supplied with a 7 inch colour touch screen user interface	Enhanced ease of use	254-1762
Leak detection	159	0-10 V signal to report any refrigerant leakage in the unit directly on the controlller (the leak detector itself must be supplied by the customer)	Immediate customer notification of refrigerant losses to the atmosphere, allowing timely corrective actions	254-1762
Compliance with Swiss regulations	197	Additional tests on the water heat exchangers: supply (additional of PED documents) supplementary certificates and test certifications	Conformance with Swiss regulations	254-1762
Compliance with Australian regulations	200	Unit approved to Australian code	Conformance with Australian regulations	254-1762
Low noise level	257	Evaporator and suction piping sound insulation	3 dB(A) quiter than standard unit	254-1762
Welded evaporator water connection kit	266	Victaulic piping connections with welded joints	Easy installation	254-1762
Welded condenser water connection kit	267	Victaulic piping connections with welded joints	Easy installation	254-1762
Flanged evaporator water connection kit	268	Victaulic piping connections with flanged joints	Easy installation	254-1762
Flanged condenser water connection kit	269	Victaulic piping connections with flanged joints	Easy installation	254-1762
Thermal compressor insulation	271	The compressor is covered with a thermal insulation layer	Prevents air humidity to condensate on the compressor surface	254-1762
230V electrical plug	284	230V AC power supply source provided with plug socket and transformer (180 VA, 0,8 Amps)	Permits connection of a laptop or an electrical device during unit commissioning or servicing	254-1762
Carrier Connect link (BSS regions only)	298	3G router board NOTE 1: require option 149 NOTE 2: when more than one machine is installed on site, only one of them shall be equipped with option 298 while all of them must be equipped with option 149 NOTE 3: if a CARRIER-PSM is on site, option 298 shall be integrated in the PSM while option 149 is still mandatory for each single unit.	Enabler for Carrier Connect service offer	254-1762

Accessories

Accessories	Description	Advantages	Use 30XW
Very low noise level (-20 dB(A) compared to standard unit)	Sound absorbing cabinet for single-circuit units	Significantly quieter (-20 dB(A)) than a unit without this option	254-862
Very low noise level (-20 dB(A) compared to standard unit)	Sound absorbing cabinet for twin-circuit units	Significantly quieter (-20 dB(A)) than a unit without this option	1002-1252, 1352, 1452, 1552, 1314, 1464

Remote management (EMM option)

The Energy Management Module offers extended remote control possibilities:

- Room temperature: permits set-point reset based on the building indoor air temperature (with Carrier thermostat)
- Set point reset: ensures reset of the cooling set-point based on a 4–20 mA or 0–10 V signal
- Demand limit: permits limitation of the maximum chiller power or current based on a 0–10 V signal
- Demand limit 1 and 2: closing of these contacts limits the maximum chiller power or current to two predefined values
- User safety: this contact can be used for any customer safety loop; opening of the contact generates a specific alarm
- Ice storage end: when ice storage has finished, this input permits return to the second set-point (unoccupied mode)
- Time schedule override: closing of this contact cancels the time schedule effects
- Out of service: this signal indicates that the chiller is completely out of service
- Chiller capacity: this analogue output (0–10 V) gives an immediate indication of the chiller capacity

Features and advantages

Superior operating economy

- Full load and part load energy efficiency that surpasses the industry average:
  - Eurovent energy efficiency class “A”
  - EER of up to 5.9 kW/kW (30XW-P)
  - ESEER of up to 6.8 kW/kW (30XW-P)
  - New twin-rotor screw compressor equipped with a high-efficiency motor and a variable capacity valve that permits exact matching of the cooling capacity to the load.
  - Flooded multi-pipe evaporator and condenser for increased heat exchange efficiency.
  - Electronic expansion device permitting operation at a lower condensing pressure and improved utilisation of the evaporator heat exchange surface.
  - Economizer system with electronic expansion device for increased cooling capacity (30XW-P).

Low operating sound levels

- Compressors
  - Silencers on the discharge line.
  - Silencers on the economiser return line.
  - Acoustic insulation on the components that are most subjected to radiated noise.

Easy and fast installation

- Compact design
  - The 30XW units are designed to offer the most compact dimensions on the market.
  - With a width of approximately 1 m up to 1600 kW the units can pass through standard door openings and only require minimum floor space in the plant room.
- Simplified electrical connections
  - Main disconnect switch with high trip capacity
  - Transformer to supply the integrated control circuit (400/24 V)
- Simplified hydronic connections
  - Victaulic connections on the evaporator and condenser
  - Practical reference marks for entering and leaving water connections
  - Possibility to reverse the heat exchanger water inlet and outlet at the factory
  - Possibilty to modify the number of heat exchanger passes
- Fast commissioning
  - Systematic factory operation test before shipment
  - Quick-test function for step-by-step verification of the instruments, expansion devices and compressors

Environmentally balanced

- R-134a refrigerant
  - HFC refrigerant with zero ozone depletion potential
- Leak-tight refrigerant circuit
  - Reduction of leaks as no capillary tubes and flare connections are used
  - Verification of pressure transducers and temperature sensors without transferring refrigerant charge
  - Discharge line shut-off valve and liquid line service valve for simplified maintenance.

Absolute reliability

- Screw compressors
  - Industrial-type screw compressors with oversized bearings and motor cooled by suction gas.
  - All compressor components are easily accessible on site minimising down-time.
  - Protection increased by an electronic board.
- Refrigerant circuit
  - Two independent refrigerant circuits (from 1000 kW upwards); the second one automatically takes over, if the first one develops a fault, maintaining partial cooling under all circumstances.
- Evaporator
  - Electronic paddle-free flow switch. Auto-setting according to cooler size and fluid type.
- Auto-adaptive control
  - Control algorithm prevents excessive compressor cycling (Carrier patent)
  - Automatic compressor unloading in case of abnormally high condensing pressure.
- Exceptional endurance tests
  - Partnerships with specialised laboratories and use of limit simulation tools (finite element calculation) for the design of critical components.
  - Transport simulation test in the laboratory on a vibrating table and then on an endurance circuit (based on a military standard).

Remote Management (Standard)

- Units with Touch Pilot control can be easily accessed from the internet, using a PC with an Ethernet connection. This makes remote control quick and easy and offers significant advantages for service operations.
- The 30XW also communicates with other building management systems via optional communication gateways.
- The 30XW is equipped with an RS485 serial port that offers multiple remote control, monitoring and diagnostic possibilities. Carrier offers a vast choice of control products, specially designed to control, manage and supervise the operation of an air conditioning system. Please consult your Carrier representative for more information.
- The following commands/visualisations are possible from remote connection:
  - Condenser pumps control: a digital input allows verification of condenser water flow (the flow switch must be supplied by the installer)
  - Start/stop of the machine
  - Dual set-point management: through a dedicated contact is possible to activate a second set-point (example: unoccupied mode)
  - Demand limit setting: to limit the maximum chiller capacity to a predefined value
  - Operation visualization: indication if the unit is operating or if it’s in stand-by (no cooling load)
  - alarm visualization.

New generation 06T screw compressor

The new generation of the Carrier 06T screw compressors benefits from Carrier's long experience in the development of twin-rotor screw compressors. The compressor is equipped with bearings with oversized rollers, oil pressure lubricated for reliable and durable operation, even at maximum load.

A variable control valve controlled by the oil pressure permits infinitely variable capacity.

Among the other advantages: if a fault occurs e.g. if the condenser is fouled or at very high water temperature, the compressor does not switch off, but continues operation with a reduced capacity (unloaded mode).

The silencer in the discharge line considerably reduces discharge gas pulsations for much quieter operation.

The condenser includes an oil separator that minimises the amount of oil in circulation in the refrigerant circuit and re-directs it to the compressor function.

Controls

Touch Pilot Control

- New innovative smart control features:
  - An intuitive and user-friendly, coloured, 5" interface (7» optional)
  - Direct access to the unit's technical drawings and the main service documents
  - Screen-shots with coincisive and clear information in local languages
  - Complete menu, customised for different users (end user, service personnel and Carrier-factory technicians)
  - Easy access to the controller box with inclined touch screen mounting to ensure legibility under any lighting conditions
  - Safe operation and unit setting: password protection ensures that unauthorised people cannot modify any advanced parameters
  - Simple and «smart» intelligence uses data collection from the constant monitoring of all machine parameters to optimise unit operation.
- Energy management:
  - Internal time schedule clock controls chiller on/off times and operation at a second set-point
  - The DCT (Data Collection Tool) records the alarms history to simplify and facilitate service operations.

Touch Pilot control, 5" user interface

Operating limits

Standard 30XW-- and 30XW-P units	Minimum	Maximum
Evaporator		
Entering temperature at start-up	-	35.0°C
Leaving temperature during operation	3.3°C*	20.0°C
Entering/leaving temperature difference at full load	2.8 K	11.1 K
Condenser		
Entering temperature at start-up	13.0°C**	-
Leaving temperature during operation	19.0°C**	50.0°C***
Entering/leaving temperature difference at full load	2.8 K	11.1 K

* For low-temperature applications, where the leaving water temperature is below 3.3°C, a frost protection solution must be used. Please refer to option 5 and option 6.
** For lower condenser temperatures, a water flow control valve must be used at the condenser (two or three-way valve). Please refer to option 152 to ensure the correct condensing temperature.
*** Please refer to option 150 for applications with a high condenser leaving temperature (up to 63°C).

Standard units

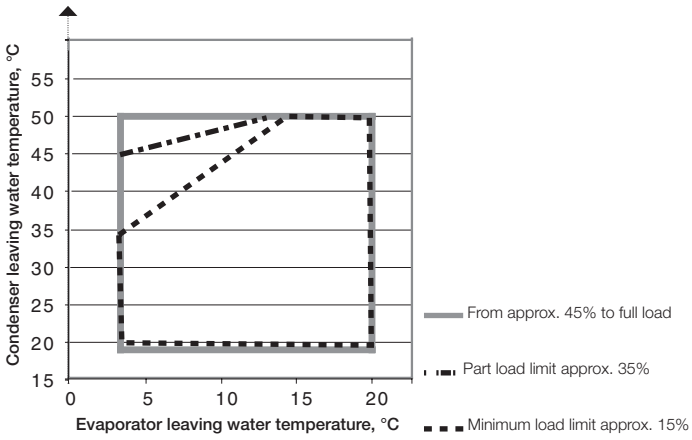

Units with option 150 30XW--/30XW-P	Minimum	Maximum
Evaporator		
Entering temperature at start-up	-	35.0°C
Leaving temperature during operation	3.3°C*	15.0°C
Entering/leaving temperature difference at full load	2.8 K	11.1 K
Condenser		
Entering temperature at start-up	13.0°C**	-
Leaving temperature during operation	23.0°C**	63.0°C
Entering/leaving temperature difference at full load	2.8 K	11.1 K

* For low-temperature applications, where the leaving water temperature is below 3.3°C, a frost protection solution must be used. Please refer to option 5 and option 6.
** For lower condenser temperatures, a water flow control valve must be used at the condenser (two or three-way valve). Please refer to option 152 to ensure the correct condensing temperature.

Option 150

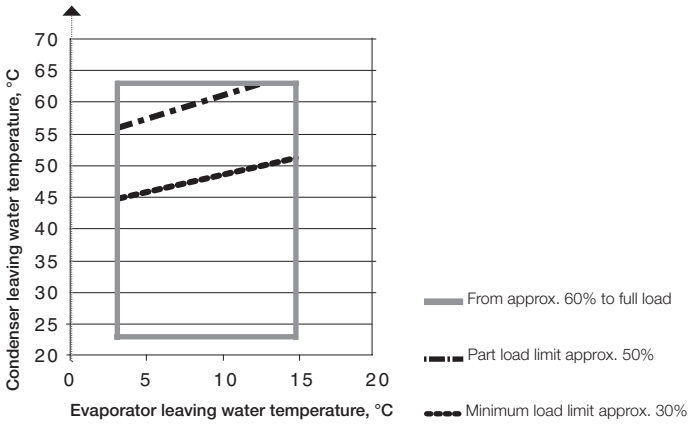

Units with options 5 and 6 30XW-- (1154)/30XW-P (512-562-1012)	Minimum	Maximum
Evaporator		
Entering temperature at start-up	-	35.0°C
Leaving temperature during operation*		
EG 5 Option 5 with ethylene glycol	-6°C	15.0°C
PG 5 Option 5 with propylene glycol	-3°C	15.0°C
EG 6 Option 6 with ethylene glycol	-12°C	15.0°C
PG 6 Option 6 with propylene glycol	-8°C	15.0°C
Entering/leaving temp. difference at full load	2.8 K	11.1 K***
Condenser		
Entering temperature at start-up	13.0°C**	-
Leaving temperature during operation	19.0/ 23.0°C**	55.0/ 63.0°C****
Entering/leaving temp. difference at full load	2.8 K	11.1 K

* The operating range with evaporator leaving temperatures above 3°C is permitted, but the performances are not optimised.
** For lower condenser temperatures, a water flow control valve must be installed at the condenser (two-way or three-way). Please refer to option 152 to ensure the correct condensing temperature.
*** Please refer to chapter 10.5 of the installation manual for the minimum recommended evaporator glycol flow rate.
**** Depends on the conditions at the evaporator and the load conditions.

Options 5 and 6

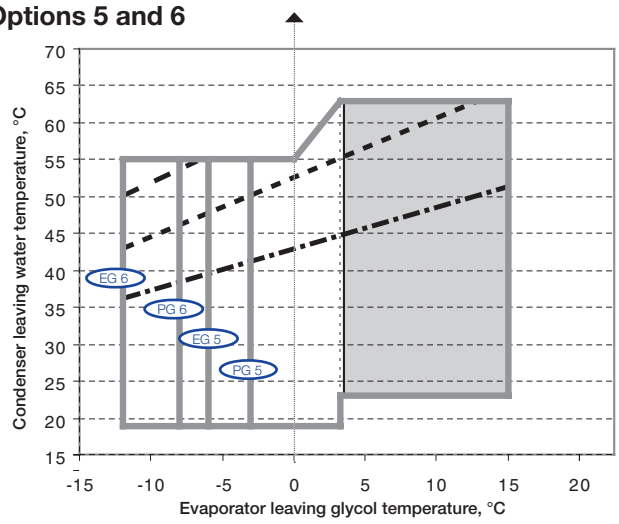

Operating range permitted, but performances are not optimised
Full load with option 5/6 and ethylene or propylene glycol
Part load limit approx. 80%
Part load limit approx. 50%
Part load limit approx. 30%

Notes: Ambient temperatures: During storage and transport of the 30XW units (including by container) the minimum and maximum permissible temperatures are -20°C and 72°C (and 65°C for option 200).
For more precise details refer to the unit selection program.

Pressure drop curves

Evaporator pressure drop curves

Units with two evaporator passes (standard): 30XW--/30XW-P

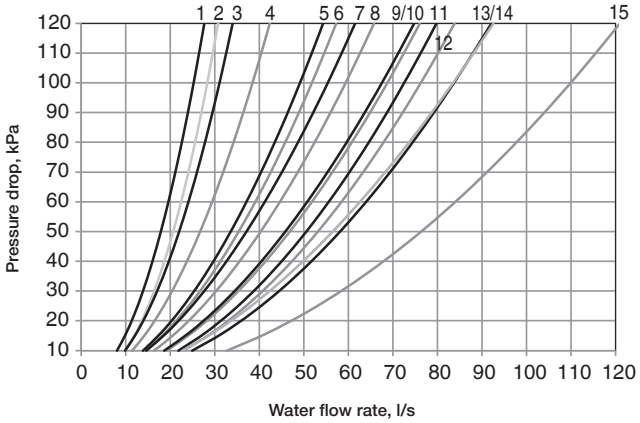

Legend

1. 254
2. 304
3. 354
4. 402, 452, 552, 602
5. 512, 562
6. 652, 702, 802
7. 852
8. 1002, 1052
9. 1154
10. 712, 812, 862
11. 1012,1162
12. 1252, 1352, 1452, 1552
13. 1314, 1464
14. 1652, 1702
15. 1612, 1762

Units with one evaporator pass (option 100C): 30XW/30XW-P

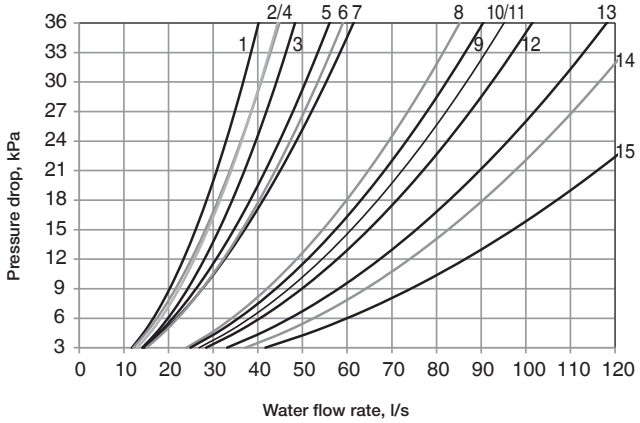

Legend

1. 254
2. 304
3. 354
4. 402, 452, 552, 602
5. 512, 562
6. 652, 702, 802
7. 852
8. 1002, 1052
9. 1012,1162
10. 712, 812, 862
11. 1252, 1352, 1452, 1552
12. 1154
13. 1314, 1464
14. 1652, 1702
15. 1612, 1762

Condenser pressure drop curves

Units with two condenser passes (standard): 30XW/30XW-P

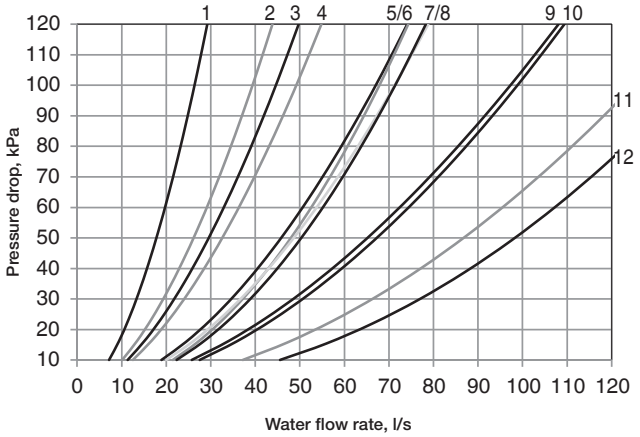

Legend

1. 254, 304, 354
2. 402, 452, 552, 602
3. 512, 562
4. 652, 702, 802
5. 712, 812, 862
6. 852
7. 1154
8. 1002, 1052
9. 1012,1162
10. 1252, 1352, 1452, 1552, 1314, 1464
11. 1652, 1702
12. 1612, 1762

Units with one condenser pass (option 102C): 30XW/30XW-P

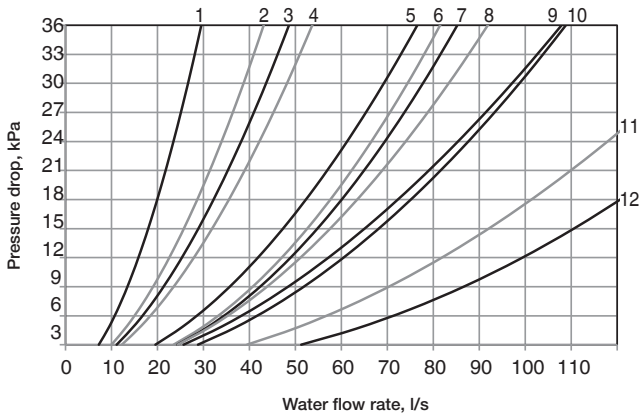

Legend

1. 254, 304, 354
2. 402, 452, 552, 602
3. 512, 562
4. 652, 702, 802
5. 712, 812, 862
6. 852
7. 1002, 1052
8. 1154
9. 1012,1162
10. 1252, 1352, 1452, 1552, 1314, 1464
11. 1652, 1702
12. 1612, 1762

Dimensions/clearances

30XW-- 254-852
30XW-P 512-862

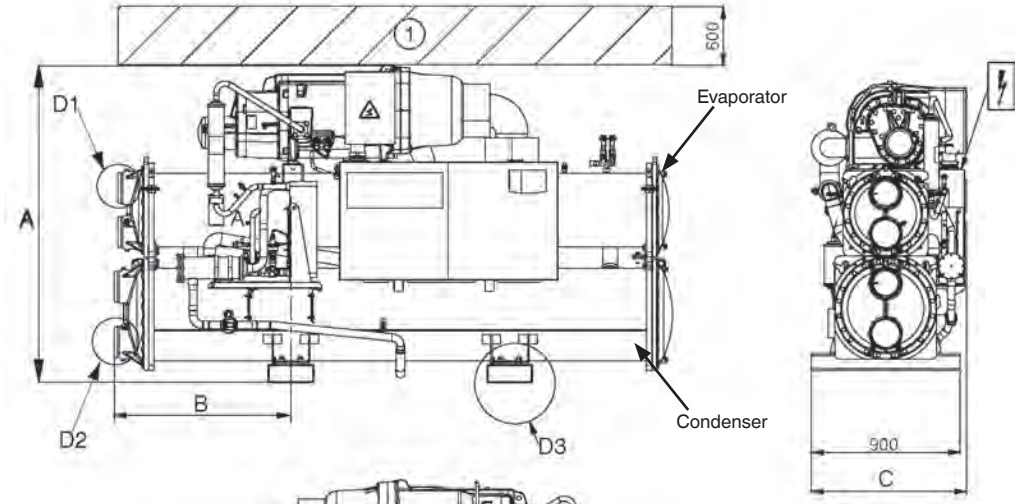

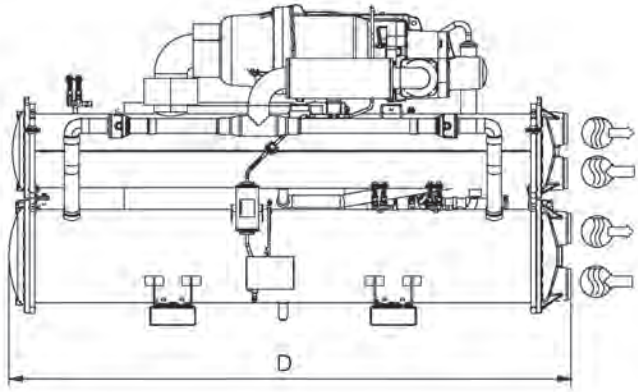

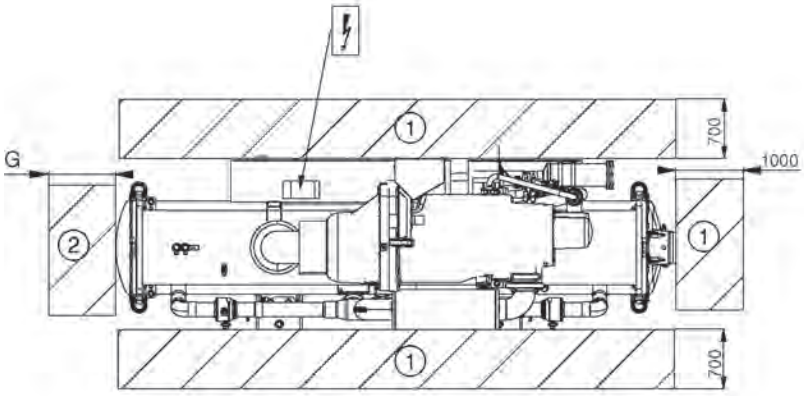

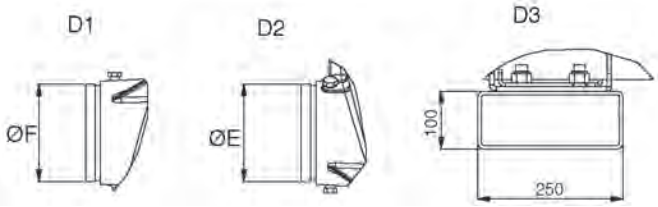

	Dimensions in mm						
	A	B	C	D	E	F	G
Standard-efficiency units 30XW--							
254	1567	800	928	2724	141.3	141.3	2600
304	1567	800	928	2724	141.3	141.3	2600
354	1567	800	928	2724	141.3	141.3	2600
402	1693	810	936	2742	141.3	141.3	2600
452	1693	810	936	2742	141.3	141.3	2600
552	1693	810	936	2742	141.3	141.3	2600
602	1693	810	936	2742	141.3	141.3	2600
652	1848	968	1044	3059	168.3	168.3	2800
702	1848	968	1044	3059	168.3	168.3	2800
802	1848	968	1044	3059	168.3	168.3	2800
852	1898	828	1044	2780	219.1	168.3	2600
High-efficiency units 30XW-P							
512	1743	968	936	3059	168.3	168.3	2800
562	1743	968	936	3059	168.3	168.3	2800
712	1950	1083	1065	3290	219.1	219.1	3100
812	1950	1083	1070	3290	219.1	219.1	3100
862	1950	1083	1070	3290	219.1	219.1	3100
Standard-efficiency units 30XW-- (option 150)							
254	1567	800	928	2724	141.3	141.3	2600
304	1567	800	928	2724	141.3	141.3	2600
354	1567	800	928	2724	141.3	141.3	2600
402	1693	810	936	2742	141.3	141.3	2600
452	1693	810	936	2742	141.3	141.3	2600
552	1693	810	936	2742	141.3	141.3	2600
602	1693	810	936	2742	141.3	141.3	2600
652	1868	968	1090	3059	168.3	168.3	2800
702	1868	968	1090	3059	168.3	168.3	2800
802	1868	968	1090	3059	168.3	168.3	2800
852	1920	828	1090	2780	168.3	219.1	2600
High-efficiency units 30XW-P (option 150)							
512	1743	968	936	3059	168.3	168.3	2800
562	1743	968	936	3059	168.3	168.3	2800
712	1970	1083	1105	3290	219.1	219.1	3100
812	1970	1083	1105	3290	219.1	219.1	3100
862	1970	1083	1105	3290	219.1	219.1	3100

Legend:

All dimensions are in mm.

(1) Required clearance for maintenance

(2) Recommended clearance for tube removal

Water inlet

Water outlet

Power supply connection

Note: Drawings are not contractually binding. Before designing an installation, consult the certified dimensional drawings, available on request.

30XW-- 1002-1552
30XW-P 1012-1464

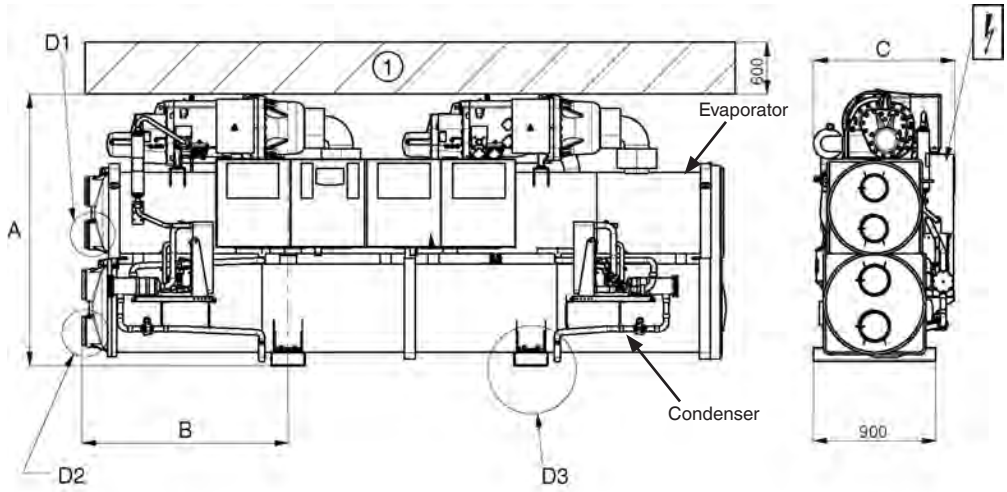

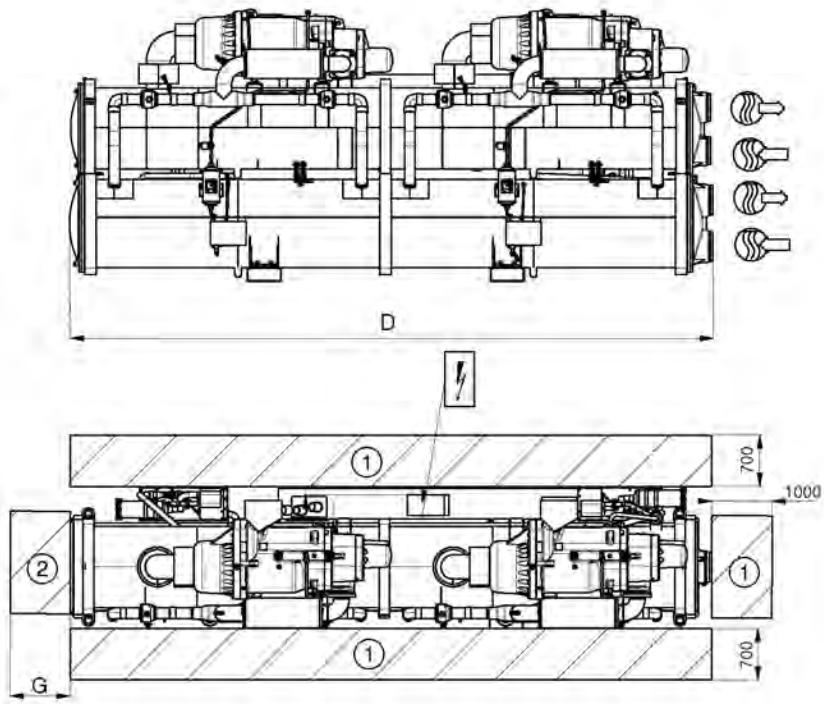

	Dimensions in mm						
	A	B	C	D	E	F	G
Standard-efficiency units 30XW--							
1002	1870	950	1036	4025	219.1	168.3	3800
1052	1870	950	1036	4025	219.1	168.3	3800
1152	1925	950	1036	4025	219.1	219.1	3800
1252	2051	1512	1162	4730	219.1	219.1	4500
1352	2051	1512	1162	4730	219.1	219.1	4500
1452	2051	1512	1162	4730	219.1	219.1	4500
1552	2051	1512	1162	4730	219.1	219.1	4500
High-efficiency units 30XW-P							
1012	1997	1512	1039	4730	219.1	219.1	4500
1162	1997	1512	1039	4730	219.1	219.1	4500
1314	2051	1512	1162	4730	219.1	219.1	4500
1464	2051	1512	1162	4730	219.1	219.1	4500
Standard-efficiency units 30XW-- (option 150)							
1002	1870	950	1036	4025	219.1	168.3	3800
1052	1870	950	1036	4025	219.1	168.3	3800
1154	2925	950	1036	4025	219.1	219.1	3800
1252	2071	1512	1202	4730	219.1	219.1	4500
1352	2071	1512	1202	4730	219.1	219.1	4500
1452	2071	1512	1202	4730	219.1	219.1	4500
1552	2071	1512	1202	4730	219.1	219.1	4500
High-efficiency units 30XW-P (option 150)							
1012	1997	1512	1039	4730	219.1	219.1	4500
1162	1997	1512	1039	4730	219.1	219.1	4500
1314	2071	1512	1202	4730	219.1	219.1	4500
1464	2071	1512	1202	4730	219.1	219.1	4500

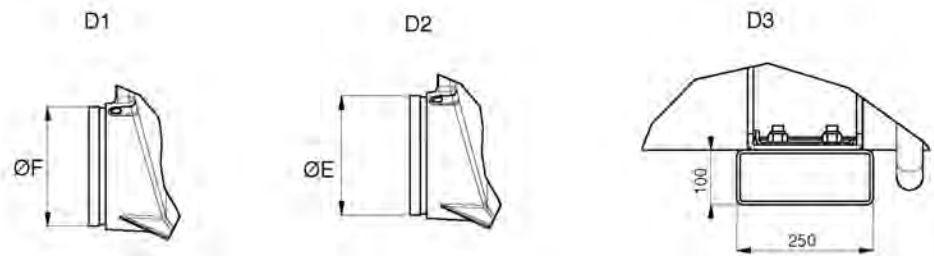

Note: Drawings are not contractually binding. Before designing an installation, consult the certified dimensional drawings, available on request.

Legend:

All dimensions are in mm.

1 Required clearance for maintenance

2 Recommended clearance for tube removal

Water inlet

Water outlet

Power supply connection

30XW-- 1652-1702
30XW-P 1612-1762

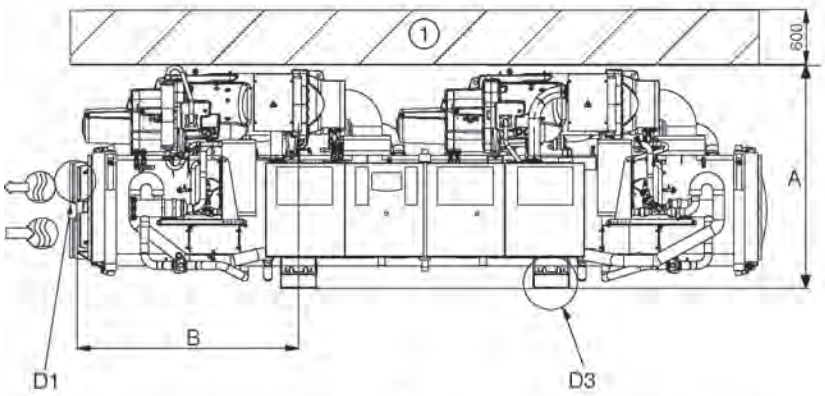

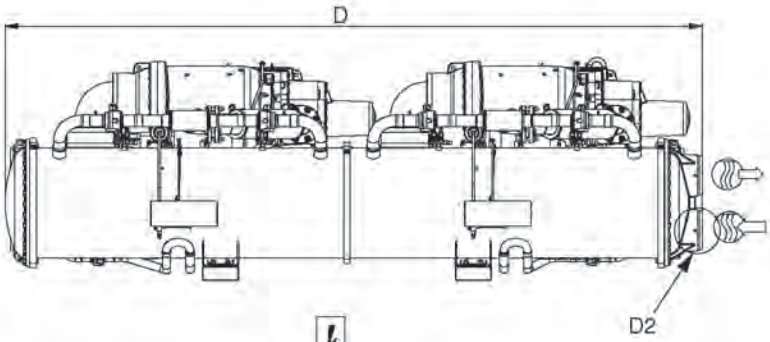

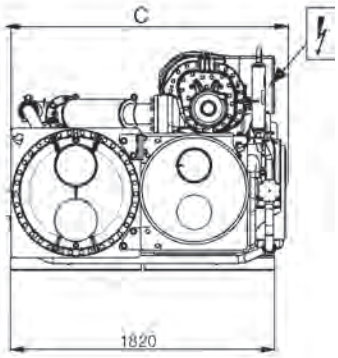

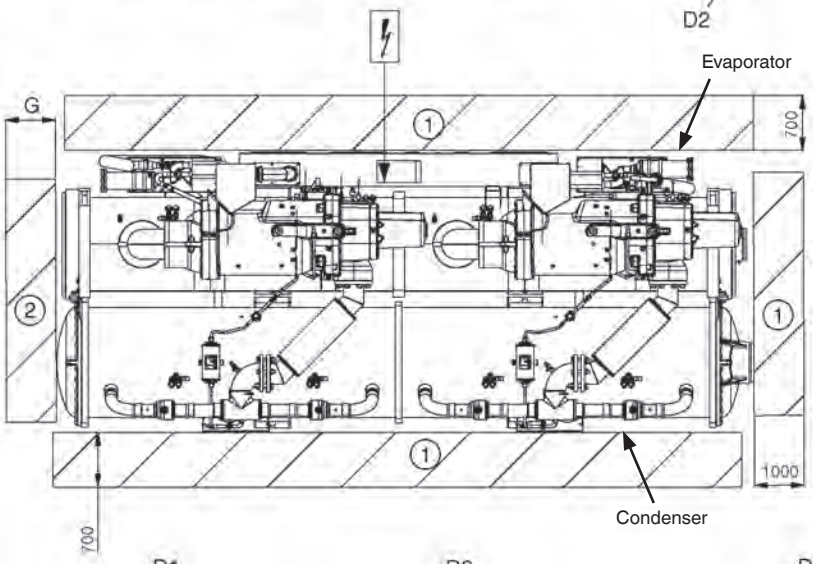

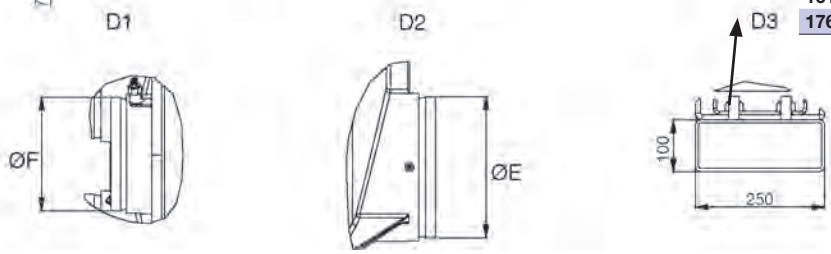

Dimensions in mm	A	B	C	D	E	F	G
Standard-efficiency units 30XW--							
1652	1515	1568	1902	4790	219.1	219.1	4500
1702	1515	1568	1902	4790	219.1	219.1	4500
High-efficiency units 30XW-P							
1612	1562	1591	2129	4832	273.1	273.1	4600
1762	1562	1591	2129	4832	273.1	273.1	4600
Standard-efficiency units 30XW-- (option 150)							
1652	1535	1568	1947	4790	219.1	219.1	4500
1702	1535	1568	1947	4790	219.1	219.1	4500
High-efficiency units 30XW-P (option 150)							
1612	1585	1591	2174	4832	273.1	273.1	4600
1762	1585	1591	2174	4832	273.1	273.1	4600

Legend:

All dimensions are in mm.

1 Required clearance for maintenance

2 Recommended clearance for tube removal

Water inlet

Water outlet

Power supply connection

Note: Drawings are not contractually binding. Before designing an installation, consult the certified dimensional drawings, available on request.

30XW-V

Nominal cooling capacity 587-1741 kW

COOLING

greenspeed AQUAFORCE

High efficiency, especially at part load

Reliability

Adaptability

Low inrush current, high cos(phi)

The 30XW-V water-sourced units are the premium solution for commercial and industrial applications where installers, consultants and building owners require maximum quality and optimal performances, especially at part load.

The 30XW-V units are designed to meet current and future requirements in terms of energy efficiency, versatility and compactness. They feature exclusive inverter-driven screw compressors - an evolution of the proven traditional Carrier twin-rotor screw compressor design. Other features include:

- The new Touch Pilot control
- Mechanically cleanable flooded heat exchangers
- Refrigerant R-134a

The 30XW-V/30XWHV range is split into two versions:

- 30XW-V for air conditioning applications
- 30XWHV for heating applications

As standard, the unit can provide an evaporator leaving water temperature down to 3.3°C.

Physical data

EUROVENT CERTIFIED PERFORMANCE
www.eurovent-certification.com

30XW-V		580	630	810	880	1150	1280	1470	1570	1710
Cooling										
Air conditioning application as per EN14511-3:2013† - standard unit										
Condition 1										
Nominal cooling capacity	kW	587	652	812	858	1140	1305	1461	1604	1741
ESEER	kW/kW	7.80	7.60	8.04	7.76	7.79	7.59	7.30	7.15	6.85
EER	kW/kW	5.44	5.31	5.25	5.07	5.45	5.50	5.38	5.05	4.94
Eurovent class cooling	-	A	A	A	A	A	A	A	-	-
Air conditioning application†† - standard unit										
Condition 1										
Nominal cooling capacity	kW	588	655	814	861	1144	1311	1469	1614	1754
ESEER	kW/kW	9.03	9.04	9.52	9.25	9.08	9.17	9.08	9.16	9.01
EER	kW/kW	5.67	5.56	5.46	5.29	5.68	5.80	5.74	5.41	5.34
Cooling floor application as per EN14511-3:2013† - standard unit										
Condition 2										
Cooling capacity	kW	791	846	1023	970	1528	1688	1703	2093	2273
EER	kW/kW	6.96	6.50	6.22	5.63	6.86	6.64	5.99	6.00	6.00
Eurovent class cooling	-	A	A	A	A	A	A	A	-	-
Cooling floor application†† - standard unit										
Condition 2										
Cooling capacity	kW	794	850	1026	973	1537	1700	1715	2113	2297
EER	kW/kW	7.50	7.03	6.62	5.93	7.42	7.29	6.53	6.76	6.88
Sound levels, standard units										
Sound power level*	dB(A)	105	105	105	105	106	106	106	106	106
Sound pressure level at 1 m**	dB(A)	87	87	87	87	87	87	87	87	87
Sound levels - standard unit + option 257* **										
Sound power level*	dB(A)	102	102	102	102	103	103	103	103	103
Sound pressure level at 1 m**	dB(A)	84	84	84	84	84	84	84	84	84
Dimensions - standard unit										
Length	mm	3059	3059	3290	3290	4730	4730	4730	4730	4730
Width	mm	1087	1087	1237	1237	1164	1164	1255	1255	1255
Height	mm	1743	1743	1950	1950	1997	1997	2051	2051	2051
Operating weight** **	kg	3152	3190	4157	4161	7322	7398	7574	7770	7808
Compressors		Semi-hermetic 06T screw compressor, 60 r/s								
Circuit A		1	1	1	1	1	1	1	1	1
Circuit B		-	-	-	-	1	1	1	1	1
Refrigerant - standard unit** **		R-134a								
Circuit A	kg	130	130	180	175	120	120	115	115	110
Circuit B	kg	-	-	-	-	120	120	120	115	110
Global Warming Potential (GWP)										
Tonnes of equivalent CO_2 of greatest circuit	tonnes	186	186	257	250	172	172	172	164	157
Capacity control		Touch Pilot, inverter-driven compressor, electronic expansion valve (EXV)								
Minimum capacity	%	20	20	20	20	10	10	10	10	10
Evaporator		Multi-tube type flooded								
Water volume	l	106	106	154	154	297	297	297	297	297
Water connections (Victaulic)	inch	6	6	8	8	8	8	8	8	8
Drain and vent connections (NPT)	inch	3/8	3/8	3/8	3/8	3/8	3/8	3/8	3/8	3/8
Maximum water-side operating pressure	kPa	1000	1000	1000	1000	1000	1000	1000	1000	1000
Condenser		Multi-tube type flooded								
Net water volume	l	112	112	165	165	340	340	340	340	340
Water connections (Victaulic)	inch	6	6	8	8	8	8	8	8	8
Drain and purge (NPT)	inch	3/8	3/8	3/8	3/8	3/8	3/8	3/8	3/8	3/8
Maximum water-side operating pressure	kPa	1000	1000	1000	1000	1000	1000	1000	1000	1000
Chassis paint colour		Colour code: RAL7035								

† Eurovent-certified performances in accordance with standard EN14511-3:2013.
†† Gross performances, not in accordance with EN14511-3:2013. These performances do not take into account the correction for the proportionnal heating capacity and power input generated by the water pump to overcome the internal pressure drop in the heat exchanger.
Condition 1: Cooling mode conditions, evaporator water entering/leaving temperature 12°C/7°C, condenser water entering/leaving temperature 30°C/35°C, evaporator fouling factor 0m².K/W.
Condition 2: Conditions in cooling mode: evaporator water entering/leaving temperature 23°C/18°C, condenser water entering/leaving temperature 30°C/35°C, evaporator/condenser fouling factor 0m².K/W.
* In dB ref=10^{-12} W, (A) weighting. Declared dualnumber noise emission values in accordance with ISO 4871 (with an associated uncertainty of +/-3dB(A)). Measured in accordance with ISO 9614-1 and certified by Eurovent.
** In dB ref 20µPa, (A) weighting. Declared dualnumber noise emission values in accordance with ISO 4871 (with an associated uncertainty of +/-3dB(A)). For information, calculated from the sound power level Lw(A).
*** Option 257 = Low noise level.
**** Weight shown is guideline only. Please refer to the unit nameplate.

Eurovent certified data

Electrical data

30XW-V		580	630	810	880	1150	1280	1470	1570	1710
Power circuit										
Nominal voltage	V-ph-Hz	400-3-50 ± 10%								
Control circuit supply		24 V, via internal transformer								
Start-up current*		Negligible (lower than maximum current drawn)								
Maximum power factor		0.91-0.93	0.91-0.93	0.91-0.93	0.91-0.93	0.91-0.93	0.91-0.93	0.91-0.93	0.91-0.93	0.91-0.93
Maximum power input, circuit A/B* **	kW	155/-	193/-	222/-	246/-	155/155	193/193	222/193	222/222	246/246
Eurovent current draw, circuit A/B **	A	175/-	200/-	240/-	265/-	175/175	200/200	240/200	240/240	265/265
Maximum current draw (Un), circuit A/B* **	A	270/-	330/-	380/-	421/-	270/270	330/330	380/330	380/380	421/421

* Instantaneous start-up current
** Eurovent unit operating conditions: evaporator entering/leaving water temperature 12°C/7°C, condenser entering/leaving water temperature 30°C/35°C.
*** Values obtained at operation with maximum unit power input. Values given on the unit name plate.

Options

Options	No.	Description	Advantages	Use 30XW-V
Light-brine solution, down to -3°C	8	Implementation of new algorithms of control to allow chilled brine solution production down to -3°C when ethylene glycol is used (0°C with propylene glycol)	Matches with most application requirements for ground-sourced heat pumps and fits with many industrial processes requirements	580-1710
Master/slave operation	58	Unit equipped with supplementary water outlet temperature sensor kit to be field-installed allowing master/slave operation of two units connected in parallel	Optimised operation of two chillers connected in parallel with operating time equalisation	580-1710
Single power connection point	81	Unit power connection via one main supply connection	Quick and easy installation	1150-1710
Evap. pump power/control circuit	84	Unit equipped with an electrical power and control circuit for one pump evaporator side	Quick and easy installation: the control of fixed speed pumps is embedded in the unit control	580-1710
Evaporator dual pumps electrical power / control circuit	84D	Unit equipped with an electrical power and control circuit for two pumps evaporator side	Quick and easy installation: the control of fixed speed pumps is embedded in the unit control	580-1710
Cond. pump power/ control circuit	84R	Unit equipped with an electrical power and control circuit for one pump condenser side	Quick and easy installation: the control of fixed speed pumps is embedded in the unit control	580-1710
Cond. dual pumps power/ control circuit	84T	Unit equipped with an electrical power and control circuit for two pumps condenser side	Quick and easy installation: the control of fixed speed pumps is embedded in the unit control	580-1710
Condenser insulation	86	Thermal condenser insulation	Minimizes thermal dispersions condenser side (key option for heat pump or heat recovery applications) and allows compliancy with special installation criteria (hot parts insulated)	580-1710
Service valve set	92	Liquid line valve (evaporator inlet) and compressor suction line valve	Allow isolation of various refrigerant circuit components for simplified service and maintenance	580-1710
Evaporator with one pass less	100C	Evaporator with one pass on the water side. Evaporator inlet and outlet on opposite sides.	Easy to install, depending on site. Reduced pressure drops	580-1710
Condenser with one pass less	102C	Condenser with one pass on the water side. Condenser inlet and outlet on opposite sides.	Easy to install, depending on site. Reduced pressure drops	580-1710
21 bar evaporator	104	Reinforced evaporator for extension of the maximum water-side service pressure to 21 bar (standard 10 bar)	Covers applications with a high water column evaporator side (typically high buildings)	580-1710
21 bar condenser	104A	Reinforced condenser for extension of the maximum water-side service pressure to 21 bar (standard 10 bar)	Covers applications with a high water column condenser side (typically high buildings)	580-1710
Reversed evaporator water connections	107	Evaporator with reversed water inlet/outlet	Easy installation on sites with specific requirements	580-1710
Reversed condenser water connections	107A	Condenser with reversed water inlet/outlet	Easy installation on sites with specific requirements	580-1710

Options	No.	Description	Advantages	Use 30XW-V
JBus gateway	148B	Two-directional communication board complying with JBus protocol	Connects the unit by communication bus to a building management system	580-1710
LON gateway	148D	Two-directional communication board complying with LON protocol	Connects the unit by communication bus to a building management system	580-1710
Bacnet over IP gateway	149	Two-directional high-speed communication using BACnet protocol over Ethernet network (IP)	Easy and high-speed connection by ethernet line to a building management system. Allows access to multiple unit parameters	580-1710
Condensing temperature limitation	150B	Limitation of the maximum condenser leaving water temperature to 45°C	Reduced maximum power input and current absorption: power cables and protection elements can therefore be downsized	580-1710
Control for low condensing temperature systems	152	Output signal (0-10 V) to control the condenser water inlet valve	Simple installation: for applications with cold water at condenser inlet (ex. ground-source, groundwater-source, superficial water-source applications) the signal permits to control a 2 or 3-way valve to maintain condenser water temperature (and so condensing pressure) at acceptable values	580-1710
Energy Management Module EMM	156	Control board with additional inputs/ outputs. See Energy Management Module option chapter	Extended remote control capabilities (Set-point reset, ice storage end, demand limits, boiler on/off command...)	580-1710
Leak detection	159	0-10 V signal to report any refrigerant leakage in the unit directly on the controlller (the leak detector itself must be supplied by the customer)	Immediate customer notification of refrigerant losses to the atmosphere, allowing timely corrective actions	580-1710
Compliance with Swiss regulations	197	Additional tests on the water heat exchangers: supply (additional of PED documents) supplementary certificates and test certifications	Conformance with Swiss regulations	580-1710
Low noise level	257	Evaporator and suction piping sound insulation	3 dB(A) quiter than standard unit	580-1710
Welded evaporator water connection kit	266	Victaulic piping connections with welded joints	Easy installation	580-1710
Welded condenser water connection kit	267	Victaulic piping connections with welded joints	Easy installation	580-1710
Flanged evaporator water connection kit	268	Victaulic piping connections with flanged joints	Easy installation	580-1710
Flanged condenser water connection kit	269	Victaulic piping connections with flanged joints	Easy installation	580-1710
Thermal compressor insulation	271	The compressor is covered with a thermal insulation layer	Prevents air humidity to condensate on the compressor surface	580-1710
EMC classification C2, as per EN 61800-3	282	Additional RFI filters on the unit power line	Reduces electromagnetic interferences. Increase the variable frequency drive (VFD) immunity level according to first environment (so called, residential environment) requirements and allow its compliancy with emissions level required in category C2	580-1710
Fast Capacity Recovery	QM295	New software algorithms to allow quick restart and fast loading while preserving unit-reliability	Full capacity recovery in less than 5 minutes after power failure. Matches requirements of typical critical missions applications	580-1710
Carrier Connect (BSS regions only)	298	3G router board NOTE 1: Require option 149 NOTE 2: When more than one machine is installed on site, only one of them shall be equipped with option 298 while all of them must be equipped with option 149 NOTE 3: If a CARRIER-PSM is on site, option 298 shall be integrated in the PSM while option 149 is still mandatory for each single unit.	Enabler for Carrier Connect service offer	580-1710

Features and advantages

Low energy consumption

- The 30XW-V/30XWHV was designed for high performance both at full load and at part load. Exceptional ESEER values set new benchmarks for low energy consumption.
  - Eurovent energy class A
  - Eurovent certified values per EN14511-3:2011: EER up to 5.5 and ESEER up to 8.0
  - EER up to 5.8 kW/kW and ESEER up to 9.5 kW/kW (gross adjusted performances, not taking into account the water pump and heat exchanger pressure drops, given as a reference for comparison).
- High energy efficiency
  - Inverter-driven twin-rotor screw compressors allow precise capacity matching of building load changes and signifi-cantly reduce unit power input, especially at part-load.
  - Flooded multi-pipe heat exchangers for increased heat exchange efficiency.
  - Electronic expansion device permits operation at a lower condensing pressure and improved utilisation of the evaporator heat exchange surface.
- Optimised electrical performance
  All 30XW-V/30XWHV units comply with class 3 of standard EN61800-3. Category C3 refers to industrial environments. With option 282 category C2 compliance is possible.
  - Inverter-driven motors ensure negligible start-up current (value is lower than the maximum unit current draw)

Designed to support green building design

- Design teams increasingly focus on designing “green buildings” to address today's energy efficiency and environmental sustainability needs. The air conditioning system uses between 30% and 40% of the annual building energy consumption. Selection of the right air conditioning unit is one the main aspects to consider when designing a green building. For buildings with a variable load throughout the year 30XW-V/30XWHV units offer the solution to this important challenge. For more details refer to page 4.

High reliability

- Inverter-driven screw compressors
  - Industrial-type screw compressors with oversized bearings and motor cooled by suction gas.
  - The inverter is optimised for each compressor motor to ensure reliable operation and easy maintenance.
  - All compressor components are easily accessible on site minimising down-time.
- Refrigerant circuits
  - Two independent refrigerant circuits (from 1000 kW upwards); the second one automatically takes over, if the first one develops a fault, maintaining partial cooling under all circumstances.
- Evaporator
  - Electronic paddle-free flow switch. Auto-setting according to cooler size and fluid type.
- Auto-adaptive control
  - Control algorithm prevents excessive compressor cycling
  - Automatic compressor unloading in case of abnormally high condensing pressure or discharge temperature.
- Exceptional endurance tests
  - Partnerships with specialised laboratories and use of limit simulation tools (finite element calculation) for the design of critical components.
  - Transport simulation test in the laboratory on a vibrating table and then on an endurance circuit (based on a military standard).

Easy and fast installation

- Compact design
  - The 30XW-V/30XWHV units are designed to offer compact dimensions for easy installation.
  - With a width of approximately 1.25 m up to 1000 kW the units can pass through standard door openings and only require minimum floor space in the plant room.
- Simplified electrical connections
  - Main disconnect switch with high trip capacity
  - Transformer supply to the integrated control circuit (400/24 V)
- Simplified water connections
  - Victaulic connections on the evaporator and condenser
  - Practical reference marks for entering and leaving water connections
  - Possibility to reverse the heat exchanger water inlet and outlet at the factory
  - Possibilty to modify the number of heat exchanger passes
- Fast commissioning
  - Systematic factory operation test before shipment Quick-test function for step-by-step verification of the instruments, expansion devices and compressors.

Minimised operating sound levels

- The inverter technology used for the compressor motors minimises noise levels at part load operation. In two-compressor units at 25% of the maximum load the unit sound power level is reduced by 10 dB(A).
- Standard unit features include:
  - Silencers on the compressor discharge line.
  - Sound insulation on the components that are most subjected to radiated noise.
- Option 257 further reduces the global unit sound level.

New inverter-driven Thunderbolt screw compressor

- The new generation of Carrier inverter-driven screw compressors benefits from Carrier's long experience in the development of twin-rotor screw compressors. The design of the Thunderbolt compressors is based on the successful 06T screw compressors.
- Advanced control algorithms combine inverter frequency output with motor input logic to minimise mechanical part stress, resulting in best compression performance and high chiller reliability. The compressor is equipped with bearings with oversized rollers, oil pressure lubricated for reliable and durable operation, even at maximum load.
- Other advantages:
  - If a fault occurs e.g. if the condenser is fouled or at very high water temperature, the compressor does not switch off, but continues operation at reduced capacity (unloaded mode).
  - The silencer in the discharge line considerably reduces discharge gas pulsations for much quieter operation.
  - The condenser includes an oil separator that minimises the amount of oil in circulation in the refrigerant circuit and re-directs it to the compressor function.

Environmentally balanced

- R-134a refrigerant
  - HFC-refrigerant with zero ozone depletion potential
- Leak-tight refrigerant circuit
  - Reduction of leaks as no capillary tubes and flare connections are used
  - Verification of pressure transducers and temperature sensors without transferring refrigerant charge
  - Discharge line shut-off valve and liquid line service valve for simplified maintenance.

Remote management (EMM option)

The Energy Management Module offers extended remote control possibilities:

- Room temperature: permits set-point reset based on the building indoor air temperature (with Carrier thermostat)
- Set point reset: ensures reset of the cooling set-point based on a 4-20 mA or 0-10 V signal
- Demand limit: permits limitation of the maximum chiller power or current based on a 0-10 V signal
- Demand limit 1 and 2: closing of these contacts limits the maximum chiller power or current to two predefined values
- User safety: this contact can be used for any customer safety loop; opening the contact generates a specific alarm
- Ice storage end: when ice storage has finished, this input permits return to the second set-point (unoccupied mode)
- Time schedule override: closing of this contact cancels the time schedule effects
- Out of service: this signal indicates that the chiller is completely out of service
- Chiller capacity: this analogue output (0-10 V) gives an immediate indication of the chiller capacity
- Alert indication: this volt-free contact indicates the necessity to carry out a maintenance operation or the presence of a minor fault.

Carrier products and green building certification

- Introduction
  Energy usage and costs combined with increasing concerns to reduce CO_2 emissions are among the most important environmental challenges in today's world. New and existing buildings are one area where energy efficiency and the conservation of natural resources is a high priority.
- Green building design
  Design teams increasingly focus on designing "green buildings" to address today's energy efficiency and environ-mental sustainability needs. A green building is a building that is environmentally sustainable and has been designed, constructed and is operated to minimise the total impact of the environment.

  The underlying principles of this approach: the resulting building will be economical to operate, offer increased comfort and create a healthier environment for the people who live and work there, increasing productivity.

The main strategies* adopted to achieve a green building design include:

- Sustainable Sites (SS)
- Water Efficiency (WE)
- Energy & Atmosphere (EA)
- Materials & Resources (MR)
- Indoor Environmental Quality (IEQ)
- Innovation in Design (ID)

- Green building certification
  A number of green building certification programs exist in the market and offer third-party assessment of green building measures for a wide variety of building types. Some examples of existing programs include:
  - LEED (Leadership in Energy & Environmental Design)
  - BREEAM
  - ESTIDAMA PEARL
  - NABERS (National Australian Built Environment Rating System)
- HVAC products and systems
  Carrier HVAC products are built to high energy efficiency and indoor air quality standards. They assist building designers and owners by offering high-performance heating, ventilation, and air conditioning (HVAC) systems and products with reduced energy consumption and enhanced indoor air quality for the occupants, contributing to optimised green building performance.

  Each certification program may address and prioritise different green building design strategies according to local and regional needs and legislation. The following example looks at how Carrier's new 30XW-V/30XWHV range helps customers involved in LEED building certification.

* Source USGBC: LEED

Example: 30XW-V/30XWHV and LEED® certification

The LEED® (Leadership in Energy and Environmental Design) green building certification programme is a pre-eminent programme to rate the design, construction and operation of green buildings with points assigned in seven credit categories:

- Sustainable Sites (SS)
- Water Efficiency (WE)
- Energy & Atmosphere (EA)
- Materials & Resources (MR)
- Indoor Environmental Quality (IEQ)
- Innovation in Design (ID)
- Regional Priority (RP)

There are a number of different LEED® products. Whilst the strategies and categories assessed remain the same, the point distribution varies to address different building types and application needs, for example according to New Construction, Schools, Core & Shell, Retail and Healthcare. All programmes now use the same point scale.

110 possible LEED points

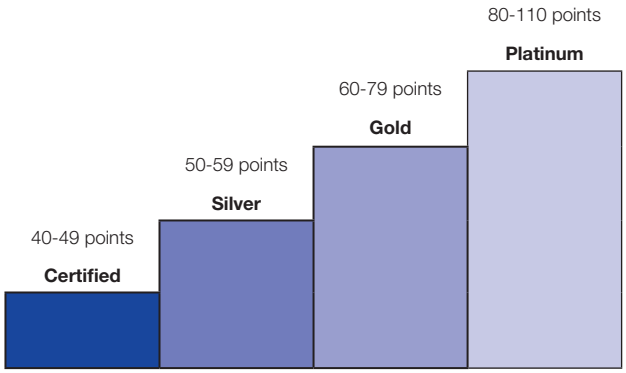

The majority of credits in LEED® rating systems are performance-based and achieving them is dependent on the impacts to the overall building. The contribution any product or system may make to the points achieved depends on how it impacts the entire building and its operations.

Whilst the LEED® green building certification programme does not certify products or services, the selection of products or service programmes is critical to obtaining LEED® certification for a registered project because the right products or service programmes can help meet the goals of green construction and ongoing operation and maintenance.

The choice of heating, ventilating and air conditioning (HVAC) products in particular can have a significant impact on LEED® certification, as the HVAC system directly impacts two categories that together influence 40% of the available points.

Overview of LEED for new construction and major renovations

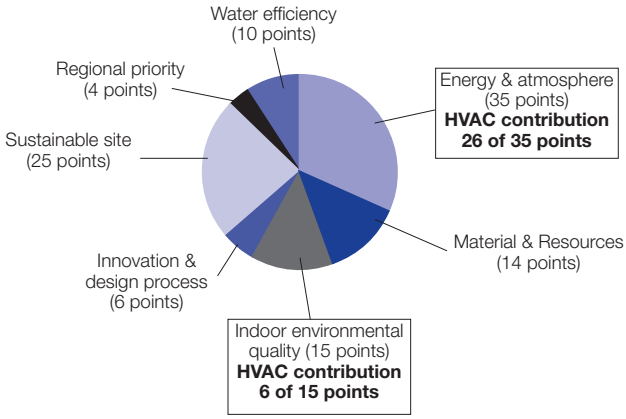

The new 30XWHV units from Carrier can assist building owners to earn LEED® points in the Energy & Atmosphere (EA) credit category and help address the following prerequisites and credit requirements:

- **EA prerequisite 3: Fundamental Refrigerant Management**
  The 30XWHV does not use chlorofluorocarbon (CFC) refrigerants satisfying the prerequisite statement
- **EA credit 1: Optimise energy performance (1 to 19 points)**
  One component for this credit requires the energy cost reduction of the proposed building compared to ASHRAE 90.1-2007 minimum tables and beyond the performance level required to meet EA prerequisite 2.

  The 30XWHV is designed for efficient part-load performance and therefore satisfies this LEED® credit. In addition, the Carrier HAP (Hourly Analysis Program) can be used in the energy analysis component of this credit. The HAP program can run analysis programs that comply with the modeling requirements for this credit and produce reports that are easily transferable to LEED® templates.
- **EA credit 4: Enhanced refrigerant management (2 points)**
  With this credit, LEED® awards systems that minimise the Ozone Depletion Potential (ODP) and Global Warming Potential (GWP) of the system.

  The 30XWHV uses a reduced R134a charge and therefore contributes toward satisfying this credit under LEED®.

Note: This section describes the prerequisites and credit requirements in LEED® for New Construction and is directly related to the 30XWHV. Other prerequisites and credit requirements are not directly and purely related to the air-conditioning unit itself, but more to the control of the complete HVAC system. i-Vu®, Carrier's open control system, has features that can be valuable for:

- EA prerequisite 1: Fundamental commissioning of energy management systems
- EA credit 3: Enhanced commissioning (2 points)
- EA credit 5: Measurements and verification (3 points)

Note: Products are not reviewed or certified under LEED®. LEED® credit requirements cover the performance of materials in aggregate, not the performance of individual products or brands. For more information on LEED®, visit: www.usgbc.org.

Controls

Touch Pilot control

Touch Pilot operator interface

- New innovative smart control for variable-drive screw-compressor chillers. With the ultimate touch screen interface the Touch Pilot includes:
  - An intuitive and user-friendly interface. Concise and clear information is available in local languages.
  - Complete menu, customised for different users (end user, service personnel or Carrier engineers).
  - Safe operation and unit setting: password protection ensures that unauthorised people cannot modify any advanced parameters.
  - General access without password to the most important operating parameters.
  - Touch Pilot combines intelligence with operating simplicity. For optimum energy efficiency the control constantly monitors all machine parameters and precisely manages the operation of compressors, electronic expansion devices and of the evaporator and condenser water pumps.
- Energy management
  - Internal time schedule clock: controls chiller on/off times and operation at a second set-point
  - Set-point reset based on the return water temperature
  - The DCT (Data Collection Tool) records the alarms history to simplify and facilitate service operations.

Remote management (standard)

Units with Touch Pilot control can be easily accessed from the internet, using a PC with an Ethernet connection. This makes remote control quick and easy and offers significant advantages for service operations.

The 30XWHV is equipped with an RS485 serial port that offers multiple remote control, monitoring and diagnostic possibilities. Carrier offers a vast choice of control products, specially designed to control, manage and supervise the operation of an air conditioning system. Please consult your Carrier representative for more information.

The 30XWHV also communicates with other building management systems via optional communication gateways.

A connection terminal allows remote control of the 30XWHV by wired cable:

- A digital input allows verification of condenser water flow (the flow switch must be supplied by the installer). This function is required to control operation of the condenser pumps.
- Start/stop: opening of this contact will shut down the unit
- Dual set-point: closing of this contact activates a second set-point (example: unoccupied mode)
- Demand limit: closing of this contact limits the maximum chiller capacity to a predefined value
- Operation indication: this volt-free contact indicates that the chiller is operating (cooling load) or that it is ready to operate (no cooling load)
- Alarm indication: this volt-free contact indicates the presence of a major fault that has led to the shut-down of one or several refrigerant circuits.

Operating limits

30XW-V	Minimum	Maximum
Evaporator		
Entering temperature at start-up	-	35.0°C
Leaving temperature during operation	3.3°C*	20.0°C
Entering/leaving temperature difference at full load	2.8 K	11.1 K
Condenser		
Entering temperature at start-up	13.0°C**	-
Leaving temperature during operation	19.0°C**	50.0°C
Entering/leaving temperature difference at full load	2.8 K	11.1 K

* Options 5/6 not available
** For lower condenser temperatures, a water flow control valve must be installed at the condenser (two-way or three-way). Please refer to option 152 to ensure the correct condensing temperature.

Notes:
Ambient temperatures: During storage and transport of the units (including by container) the minimum and maximum permissible temperatures are -20°C and 72°C (and 65°C for option 200).
For more precise details refer to the unit selection program.

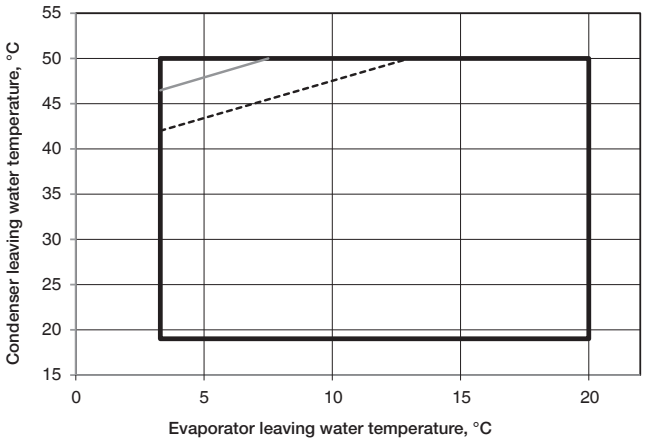

From approx. 50% to full load
Part load limit approx. 50%
Minimum load limit

For more precise details please refer to the unit selection program.

Pressure drop curves

Units with two evaporator passes (standard)

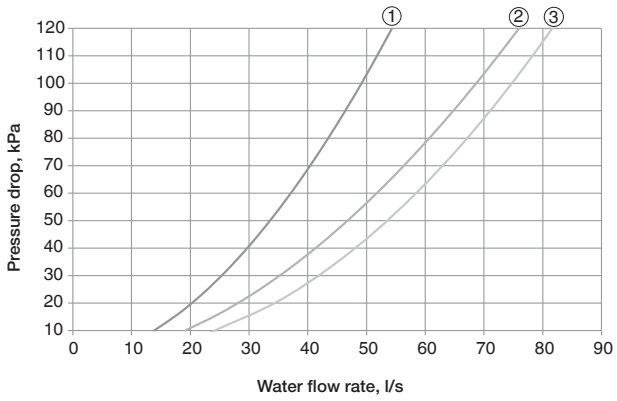

1 Sizes 580, 630
2 Sizes 810, 880
3 Sizes 1150, 1280, 1470, 1570, 1710

Units with one evaporator pass (option 100C)

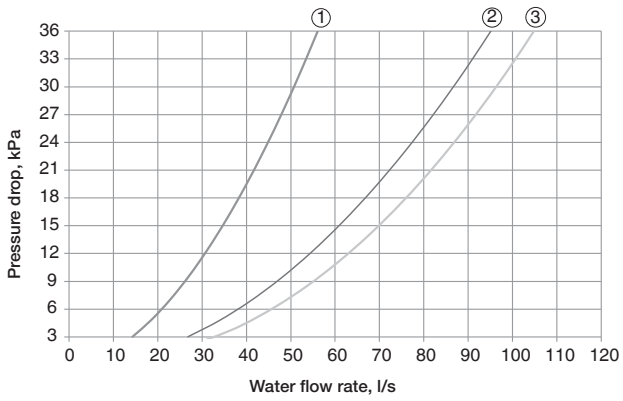

1 Sizes 580, 630
2 Sizes 810, 880
3 Sizes 1150, 1280, 1470, 1570, 1710

Units with two condenser passes (standard)

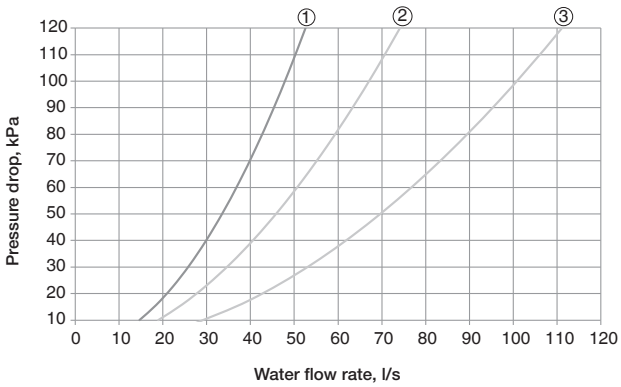

1 Sizes 580, 630
2 Sizes 810, 880
3 Sizes 1150, 1280, 1470, 1570, 1710

Units with one condenser pass (option 102C)

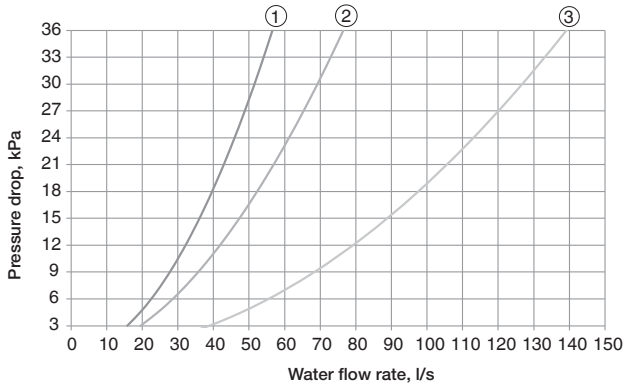

1 Sizes 580, 630
2 Sizes 810, 880
3 Sizes 1150, 1280, 1470, 1570, 1710

Dimensions/clearances

30XW-V 580-880

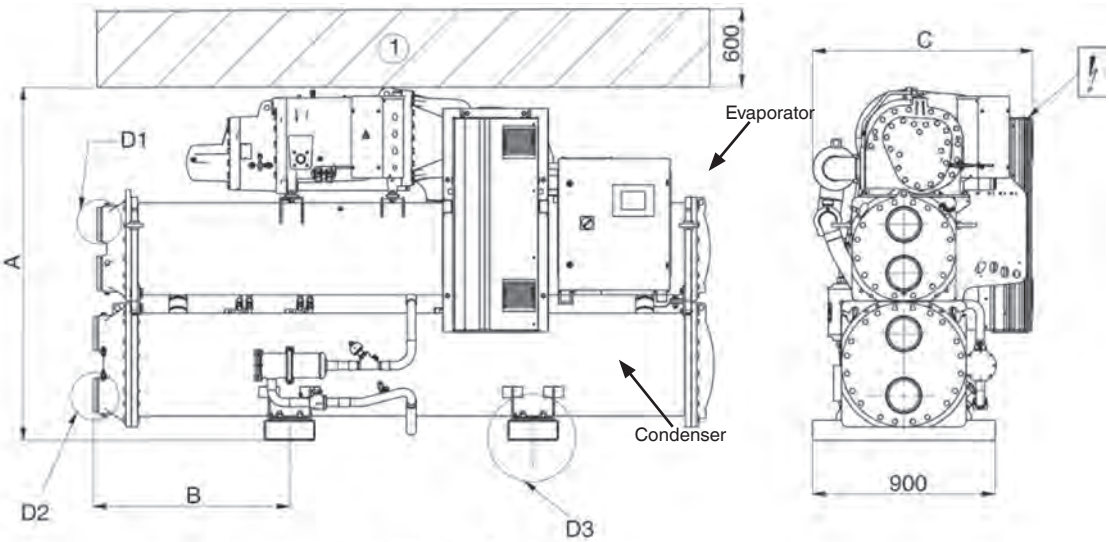

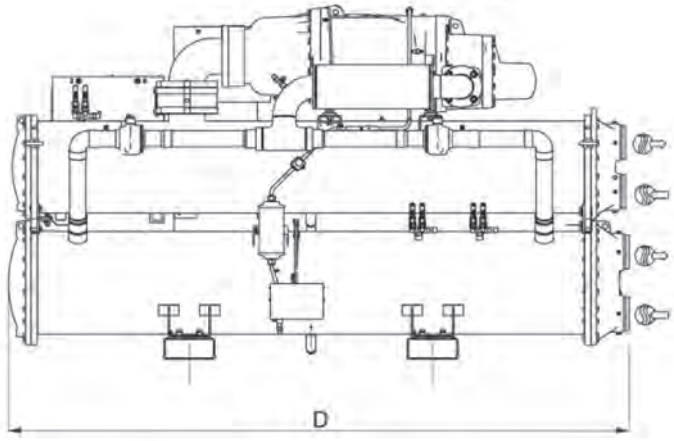

	Dimensions in mm						
	A	B	C	D	E	F	G
30XW-V							
580	1743	968	1087	3059	168.3	168.3	2900
630	1743	968	1087	3059	168.3	168.3	2900
810	1950	1083	1237	3290	219.1	219.1	3100
880	1950	1083	1237	3290	219.1	219.1	3100

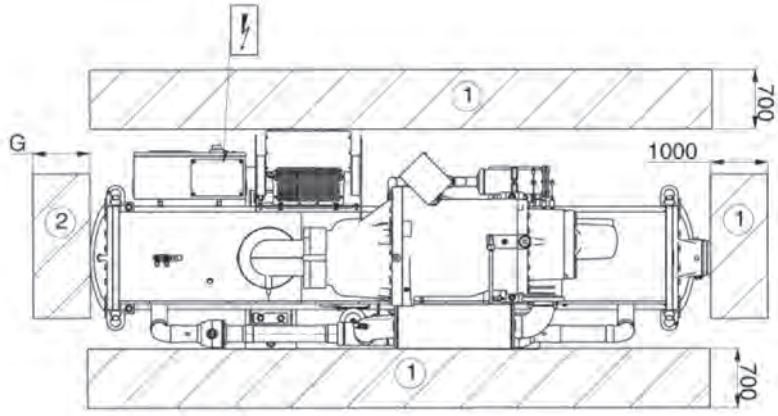

Legend:

All dimensions are in mm.

(1) Required clearance for maintenance

(2) Recommended clearance for tube removal

Water inlet

Water outlet

Power supply connection

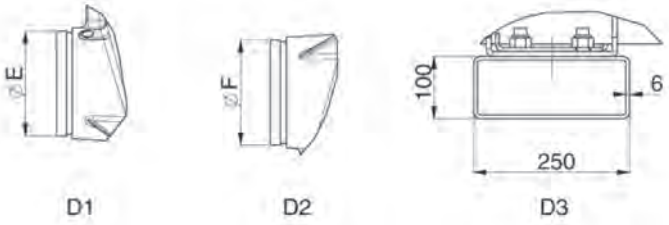

Note: Drawings are not contractually binding. Before designing an installation, consult the certified dimensional drawings, available on request.

30XW-V 1150-1710

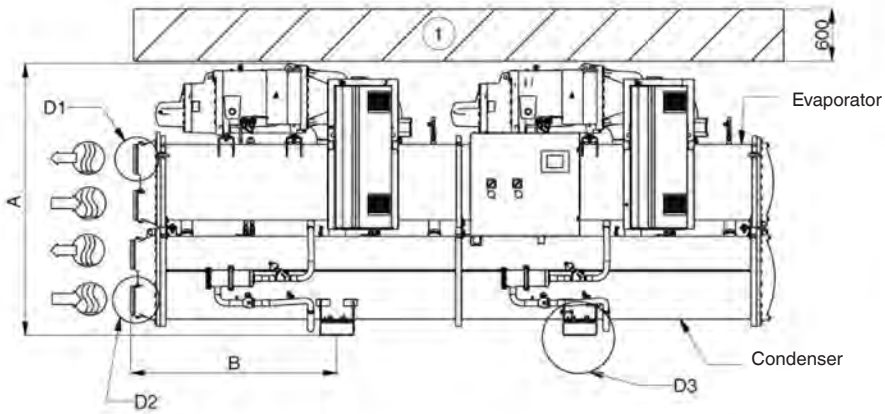

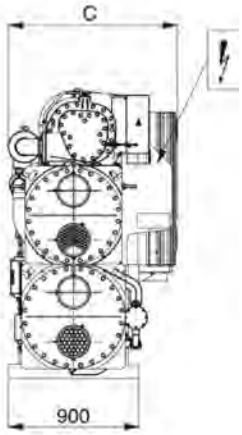

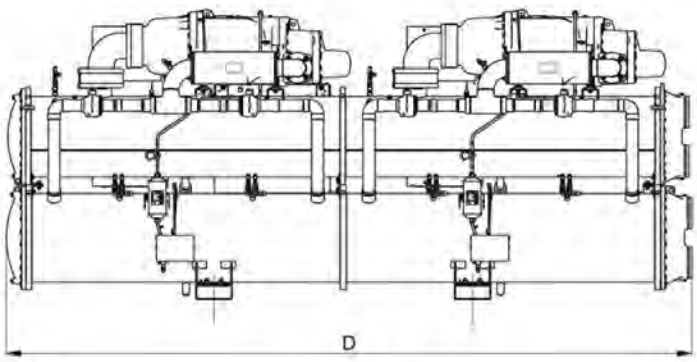

	Dimensions in mm					
	A	B	C	D	E	F
30XW-V						
1150	1997	1514	1164	4730	219.1	219.1
1280	1997	1514	1164	4730	219.1	219.1
1470	2051	1514	1255	4730	219.1	219.1
1570	2051	1514	1255	4730	219.1	219.1
1710	2051	1514	1255	4730	219.1	219.1

Legend:

All dimensions are in mm.

1 Required clearance for maintenance

2 Recommended clearance for tube removal

Water inlet

Water outlet

Power supply connection

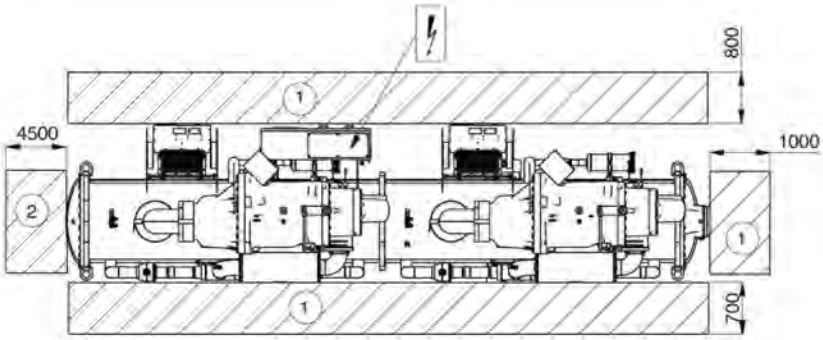

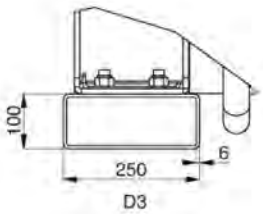

Note: Drawings are not contractually binding. Before designing an installation, consult the certified dimensional drawings, available on request.

30XW-P ZE

Nominal cooling capacity 270 - 1100 kW

NEW

30XW-V ZE

Nominal cooling capacity 440 - 1320 kW

AQUAFORCE PUREtec

Carrier at the forefront of innovative technology

Carrier has been working over the past years on selecting the right refrigerant for the future and has now taken the lead in introducing the next generation of refrigerants on screw units : PUREtec™. With PUREtec, Carrier offers a range of new customized solutions using a refrigerant with zero impact on the ozone layer and nearly zero global warming potential: HFO R-1234ze.

All the reliability, efficiency, adaptability of the AquaForce range combined with PUREtec refrigerant: HFO R-1234ze.

HFO R-1234ze

Long-term refrigerant choice

Nearly zero global warming potential

Zero impact on the ozone layer

Support HFC phase-down plan in Europe

PUREtec

Physical data

30XW-P ZE			30XW-P ZE0301	30XW-P ZE0401	30XW-P ZE0451	30XW-P ZE0551	30XW-P ZE0601
Cooling							
Performance Information							
Cooling Capacity*		kW	273	387	438	560	598
Cooling Efficiency	EER	kW/kW	5,31	5,79	5,71	5,90	5,69
Seasonal Efficiency	ESEER	kW/kW	5,69	6,21	6,26	6,54	6,36
Number of Refrigerant Circuit		--	1	1	1	1	1
Operating/Shipping Weight		kg	2072/1953	2981/2763	3020/2802	3912/3593	3947/3628
Unit Dimensions	LxWxH	mm	2724/927 /1617	3059/936/ 1743	3059/936/ 1743	3290/1065/ 1950	3290/1070/ 1950
Electrical Information							
Unit Voltage:		V-Ph-Hz	400(+/-10%) -3-50	400(+/-10%) -3-50	400(+/-10%) -3-50	400(+/-10%) -3-50	400(+/-10%) -3-50
Standby Power:		kW	0,05	0,05	0,05	0,05	0,05
Power Factor:		--	0,88	0,90	0,90	0,90	0,90
Amps (Un)							
Circuit 1							
Maximum Current		A	130	176	196	239	263
Start Up Current		A	303	414	414	587	587
Current at Eurovent Conditions		A	87	109	123	146	162
Circuit 2							
Maximum Current		A	--	--	--	--	--
Start Up Current		A	--	--	--	--	--
Current at Eurovent Conditions		A	--	--	--	--	--

30XW-P ZE			30XW-P ZE0651	30XW-P ZE0801	30XW-P ZE0901	30XW-P ZE1001	30XW-P ZE1101
Cooling							
Performance Information							
Cooling Capacity*		kW	654	789	879	1005	1103
Cooling Efficiency	EER	kW/kW	5,73	5,80	5,85	5,88	5,66
Seasonal Efficiency	ESEER	kW/kW	6,29	6,87	6,97	6,78	6,49
Number of Refrigerant Circuit		--	1	2	2	2	2
Operating/Shipping Weight		kg	3965/3646	6872/6218	6950/6296	7542/6682	7752/6892
Unit Dimensions	LxWxH	mm	3290/1070/ 1950	4795/1039/ 1997	4795/1039/ 1997	4730/1162/ 2051	4730/1162/ 2051
Electrical Information							
Unit Voltage:		V-Ph-Hz	400(+/-10%) -3-50	400(+/-10%) -3-50	400(+/-10%) -3-50	400(+/-10%) -3-50	400(+/-10%) -3-50
Standby Power:		kW	0,05	0,05	0,05	0,05	0,05
Power Factor:		--	0,82	0,89	0,90	0,90	0,90
Amps (Un)							
Circuit 1							
Maximum Current		A	284	176	196	239	239
Start Up Current		A	587	414	414	587	587
Current at Eurovent Conditions		A	176	109	123	146	146
Circuit 2							
Maximum Current		A	--	176	196	196	239
Start Up Current		A	--	414	414	414	587
Current at Eurovent Conditions		A	--	109	123	123	146

* Cooling mode conditions: Evaporator water heat exchanger, entering/leaving water temperature 12°C/7°C, fouling factor 0 m² K/W. Condenser water heat exchanger, entering/leaving water temperature 30°C/35°C, fouling factor 0m² K/W.

All performances are compliant with EN14511-3 : 2013. Sound power level according to ISO9614-1.
Unit is outside of the scope of AHRI Water-Cooled Water Chilling Packages Using Vapor Compression Cycle Certification Program, but is rated in accordance with AHRI Standard 550/590 (I-P) and AHRI Standard 551/591 (SI).
Preliminary product data for information only. Final product data will be submitted by Carrier to Eurovent company during 2016.

PRELIMINARY DATA
PRELIMINARY DATA

Physical data

30XW-V ZE			30XW-V ZE0451	30XW-V ZE0501	30XW-V ZE0601	30XW-V ZE0651	30XW-V ZE0851
Cooling							
Performance Information							
Cooling Capacity*		kW	446	496	617	652	866
Cooling Efficiency	EER	kW/kW	5,51	5,38	5,32	5,14	5,52
Seasonal Efficiency	ESEER	kW/kW	7,96	7,75	8,20	7,92	7,95
Number of Refrigerant Circuit		--	1	1	1	1	2
Operating/Shipping Weight		kg	3152/2934	3190/2972	4157/3838	4161/3842	7417/6763
Unit Dimensions	LxWxH	mm	3059/1087/ 1743	3059/1087/ 1743	3290/1137/ 1948	3290/1137/ 1948	4730/1165/ 1997
Electrical Information							
Unit Voltage:		V-Ph-Hz	400(+/-10%) -3-50	400(+/-10%) -3-50	400(+/-10%) -3-50	400(+/-10%) -3-50	400(+/-10%) -3-50
Standby Power:		kW	0,05	0,05	0,05	0,05	0,05
Power Factor:		--	0,92	0,92	0,92	0,92	0,92
Amps (Un)							
Circuit 1							
Maximum Current		A	185	234	269	297	185
Start Up Current		A	<RLA	<RLA	<RLA	<RLA	<RLA
Current at Eurovent Conditions		A	132	152	182	201	132
Circuit 2							
Maximum Current		A	--	--	--	--	185
Start Up Current		A	--	--	--	--	<RLA
Current at Eurovent Conditions		A	--	--	--	--	132

30XW-V ZE			30XW-V ZE1001	30XW-V ZE1101	30XW-V ZE1201	30XW-V ZE1301
Cooling						
Performance Information						
Cooling Capacity*		kW	992	1110	1219	1323
Cooling Efficiency	EER	kW/kW	5,57	5,45	5,11	5,01
Seasonal Efficiency	ESEER	kW/kW	7,74	7,45	7,29	6,99
Number of Refrigerant Circuit		--	2	2	2	2
Operating/Shipping Weight		kg	7493/6839	7671/7017	7872/7218	7910/7256
Unit Dimensions	LxWxH	mm	4730/1165/ 1997	4730/1255/ 2051	4730/1255/ 2051	4730/1255/ 2051
Electrical Information						
Unit Voltage:		V-Ph-Hz	400(+/-10%) -3-50	400(+/-10%) -3-50	400(+/-10%) -3-50	400(+/-10%) -3-50
Standby Power:		kW	0,05	0,05	0,05	0,05
Power Factor:		--	0,92	0,92	0,92	0,92
Amps (Un)						
Circuit 1						
Maximum Current		A	234	269	269	297
Start Up Current		A	<RLA	<RLA	<RLA	<RLA
Current at Eurovent Conditions		A	152	182	182	201
Circuit 2						
Maximum Current		A	234	234	269	297
Start Up Current		A	<RLA	<RLA	<RLA	<RLA
Current at Eurovent Conditions		A	152	152	182	201

* Cooling mode conditions: Evaporator water heat exchanger, entering/leaving water temperature 12°C/7°C, fouling factor 0 m² K/W. Condenser water heat exchanger, entering/leaving water temperature 30°C/35°C, fouling factor 0m² K/W.

All performances are compliant with EN14511-3 : 2013. Sound power level according to ISO9614-1.
Unit is outside of the scope of AHRI Water-Cooled Water Chilling Packages Using Vapor Compression Cycle Certification Program, but is rated in accordance with AHRI Standard 550/590 (I-P) and AHRI Standard 551/591 (SI).
Preliminary product data for information only. Final product data will be submitted by Carrier to Eurovent company during 2016.

PRELIMINARY DATA
PRELIMINARY DATA

23XR/XRV

Nominal cooling capacity 970 to 1880 kW

The 23XRV Evergreen range offers superior solutions with record capacities from 970 to 1880 kW, EERs up to 6.5 and ESEERs up to 10.0.

Innovative triple-rotor screw compressor design that features a balanced rotor geometry and shorter screw lengths.

Variable-frequency drive compressor to maximise machine energy efficiency. Achieves ultra-high efficiency levels whilst lowering the cost of ownership.

Combination of the reliability of a screw compressor with the energy savings of a variable-frequency drive (VFD).

Features and advantages

Features

- The 23XRV Evergreen range offers superior solutions with record capacities from 970 to 1880 kW, EERs up to 6.5 and ESEERs up to 10.0.
- Innovative triple-rotor screw compressor design that features a balanced rotor geometry and shorter screw lengths.
- Variable-frequency drive compressor to maximise machine energy efficiency. Achieves ultra-high efficiency levels whilst lowering the cost of ownership.
- Combination of the reliability of a screw compressor with the energy savings of a variable-frequency drive (VFD).
- Unparalleled operational envelope that permits the chiller to operate under real-world adverse conditions.
- Ideal for both new construction and replacement using environmentally sound refrigerant (R-134a) at superior efficiency and with powerful controls.
- Mix-match capability with wide range of heat exchangers for unit performance optimisation.

Evaporator tubes

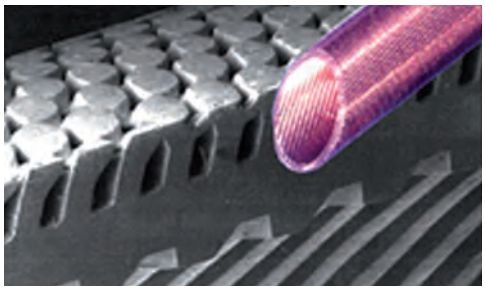

Condenser tubes

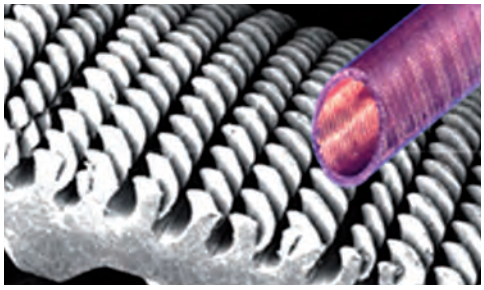

Micro-grooved heat exchanger tubes to ensure optimised heat exchange between the refrigerant and the heat exchange medium.

23XRV units are equipped with unique triple-rotor screw compressor technology

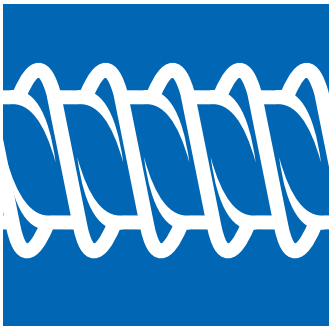

Variable-frequency drive with active filtering Cooling ensured by refrigerant

New generation screw compressor

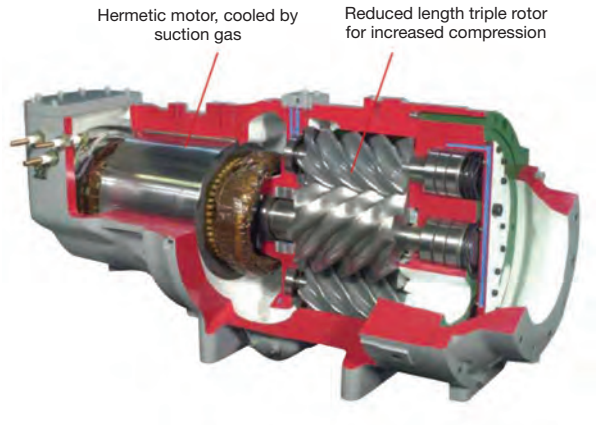

Controls

CCN - Carrier Comfort Network

Dimensions/clearances

Heat exchanger size		Length A			Width B	Height C
		One pass	Two passes	Three passes		
30 to 32	mm	4350	4172	4350	1930	2200
35 to 37	mm	4870	4693	4870	1930	2200
40 to 42	mm	4496	4347	4420	2045	2299
45 to 47	mm	5017	4867	4940	2045	2299
50 to 52	mm	4521	4382	4432	2127	2305
55 to 57	mm	5042	4902	4953	2127	2305

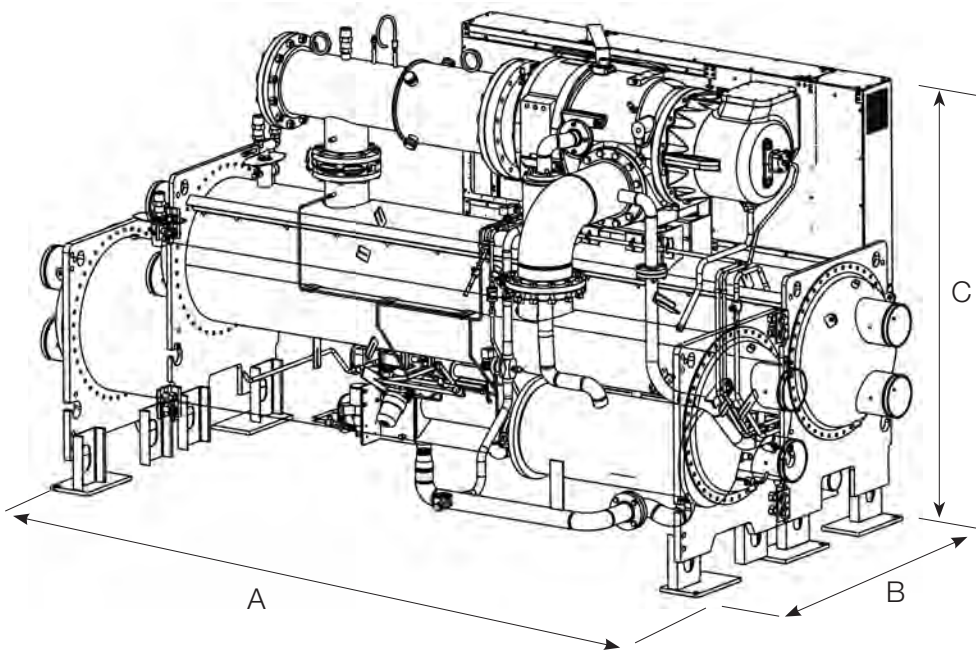

19XR/XRV

Nominal cooling capacity 1000-5300 kW

AQUAEDGE

Single-stage compressor

Industry-leading Efficiency with VFD

Standard or high-tier VFD on choice

Wide Application

Stable Operation

Low Sound Level

Modular Construction

The Carrier 19XR/19XRV centrifugal chillers provide exceptional value by achieving energy efficiency levels as high as 6.8 (EER) utilising proven technology designed specifically for chlorine-free refrigerants:

- Unique concept of the hermetic compressor:
  - Single-stage aerodynamic impeller
  - Tunnel diffusers, based on aircraft engine technology
  - Motor cooled by refrigerant gas injection
- Possibility to control the compressors using a variable frequency drive (19XRV) to maximise machine energy efficiency.
- Use of high-efficiency evaporator and condenser tubes
- Expansion sub-cooler integrated into the condenser
- Patented float valve technology for optimised sub-cooling and refrigerant level in the evaporator

These advantages, together with the modularity of the units and their efficiency, economical operation and dimensional constraints allow the use of the Carrier 19XR/19XRV centrifugal chillers in any high-capacity water cooling applications.

Physical data

heat exchanger frame size	Compressor frame size	Dimensions (mm)					
		Length		Width		Height	
		Min	Max	Min	Max	Min	Max
3	XR3	4230	4820	1670	1800	2055	2465
4	XR3	4365	4950	1880	1880	2140	2550
5	XR3	4390	4980	1995	1995	2150	2720
5	XR4	4390	4980	2055	2301	2250	2915
6	XR4	4415	5005	2145	2480	2365	2970
7	XR4	5050	5210	2430	2935	2850	3283
7	XR5	5160	5210	2470	2935	3015	3283
8	XR5	5200	5845	2710	3165	3040	3335

heat exchanger frame size	Compressor frame size	Weight (kg)					
		net (chiller + R134a)		operating (net + water)		R134a	
		Min	Max	Min	Max	Min	Max
3	XR3	6780	8100	7200	8700	277	390
4	XR3	7180	9180	7985	10200	381	508
5	XR3	8090	10890	9145	12160	493	674
5	XR4	8950	12680	10000	13950	493	674
6	XR4	9500	13430	10785	14995	546	740
7	XR4	13045	16835	14950	18700	836	1168
7	XR5	15500	20420	17400	22760	836	1168
8	XR5	18035	23800	20725	26870	984	1309

Data for unit with two-pass nozzle-in-head water boxes being at the same end (compressor end / DS code)

Features and advantages

- Nominal cooling capacities from 1000 to 5300 kW.
- Mix-match capabilities – a complete line of compressors and heat exchangers to ensure the optimal combination of machine components regardless of capacity, lift and efficiency specifications.
- Hermetic compressor – elimination of leak risks from the compressor/motor shaft sealing in an open compressor.
- Single-stage compressor with special features – aerodynamically contoured impellers, variable inlet guide vanes and movable diffusers for better compressor part and full-load operating efficiency.
- Variable speed compressor capability – improvement of part load efficiency and electrical performance.
- Heat exchangers certified by the European pressure vessels code (PED), and all marine code certifications.
- International Chiller Visual Control (ICVC) -a large english LCD (liquid crystal display) features 4 menu-specific soft keys. The default display offers all in one glance review of key chiller operation data, simplifying the interaction between chiller and user.

Options/accessories

- Two types of unit-mounted variable frequency drives (VFDs): standard and high tier, to match different customer requirements in terms of cost and electrical performances
- Refrigerant isolation valves allow the refrigerant to be stored inside the chiller during service
- Hot gaz by-pass for surge prevention during operation at high condensing temperature or for optimized operation at low load conditions
- Spring isolators adapted for all chiller configurations
- Unit-mounted starter reduces machine installation time and expense
- High-voltage motors available: 3000 V, 3300V, 6300V, 10 kV, 11 kV, 50 Hz or 60 Hz
- CCN/JBus or CCN/BACnet: remote connection
- 21 bar water heat exchanger
- Waterbox with flanges and counterflanges
- Delivered in multiple sections to facilitate the installation
- Refrigerant leak detector module : unit-mounted sensor (not compatible with 19XRV VFD)

19XR refrigeration cycle

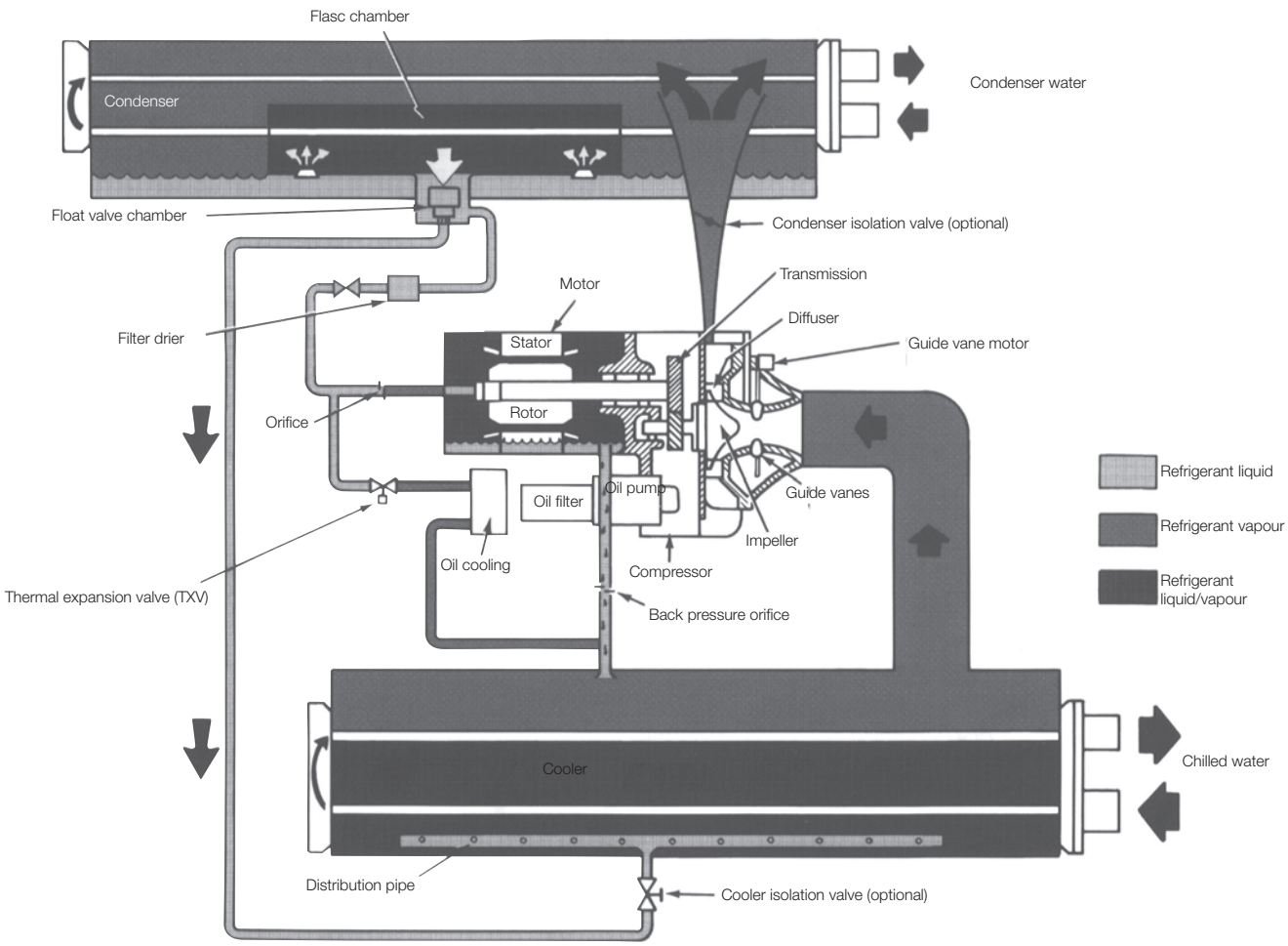

Controls

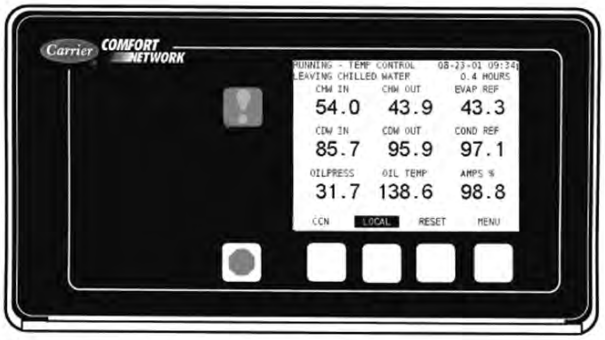

Numerical control

19XR/XRV

NEW

Nominal cooling capacity 2800 - 10500 kW

AQUAEDGE

Interstage economizer

Two-stage compressor

Industry-leading Efficiency with VFD Wide Application

Stable Operation

Low Sound Level

Modular Construction

The Carrier 19XR/19XRV with a COP up to 6.5 (AHRI conditions) and an IPLV up to 7.4 or up to 10.5 with VFD centrifugal chillers provide exceptional value by achieving energy efficiency levels as high as 6.8 (EER) utilising proven technology designed specifically for chlorine-free refrigerants:

- Interstage economizer to improve efficiency and increase capacity.
- Unique concept of the hermetic compressor:
  - Dual-stage aerodynamic impeller
  - Vane-less diffuser to meet high lift application requirement with stable operation
  - Motor cooled by spraying liquid refrigerant on the motor windings.
- Possibility to control the compressors using a variable frequency drive (19XRV) to maximise machine energy efficiency.
- Use of high-efficiency evaporator and condenser tubes
- Expansion sub-cooler integrated into the condenser
- Patented float valve technology for optimised sub-cooling and refrigerant level in the evaporator

These advantages, together with the modularity of the units and their efficiency, economical operation and dimensional constraints allow the use of the Carrier 19XR/19XRV two-stage centrifugal chillers in any high-capacity water cooling applications such as air-conditioning, heat-pump, energy recovery, ice thermal storage, marine, VFD and high-voltage applications.

Physical data

		Dimensions (mm)					
		Length		Width		Height	
Heat exchanger frame size	Compressor frame size	Min	Max	Min	Max	Min	Max
7	XRE	5160	5210	2470	2935	3015	3283
8	XRE	5200	5845	2710	3165	3040	3335

		Weight (kg)					
		net		operating		R134a	
Heat exchanger frame size	Compressor frame size	Min	Max	Min	Max	Min	Max
7	XRE	16015	20815	17920	23155	836	1168
8	XRE	18505	24270	21195	27340	984	1309

heat exchanger frame size			Dimensions (mm)		
cooler frame size	condenser frame size	Compressor frame size	Length	Width	Height
A4	A4	XR6	5175	3130	3485
A6	A6	XR6	5785	3130	3485
A4	B4	XR6	5195	3255	3485
A6	B6	XR6	5805	3255	3485
B6	C6	XR7	5925	3670	3745
C6	C6	XR7	5975	3800	3815
C6	D6	XR7	5975	4015	3815

heat exchanger frame size			Weight (kg)		
			net	operating	R134a
cooler frame size	condenser frame size	Compressor frame size	Max	Max	Max
A4	A4	XR6	30830	35466	1277
A6	A6	XR6	32330	37580	1465
A4	B4	XR6	33080	38432	1416
A6	B6	XR6	34900	40813	1623
B6	C6	XR7	44270	52132	1709
C6	C6	XR7	49110	58055	1997
C6	D6	XR7	54190	64647	2218

Data for unit with two-pass nozzle-in-head water boxes being at the same end (compressor end / DS code)

Features and advantages

- Nominal cooling capacities from 2800-10500 kW.
- Mix-match capabilities – a complete line of compressors and heat exchangers to ensure the optimal combination of machine components regardless of capacity, lift and efficiency specifications.
- Hermetic compressor – elimination of leak risks from the compressor/motor shaft sealing in an open compressor.
- Dual stage compressor with non-blade diffuser designed, combined with inner-stage economizer for chiller performance improvement and high lift application. The innovative two-stage compressor provides a dramatic range of capabilities. With a maximum LWT of 65°C and a minimum LCWT of -6°C, the 19XR two-stage centrifugal chiller is ideal wherever energy conservation and environmental protection are required.
- Variable speed compressor capability on 19XRV-E AquaEdge chiller - Improvement of part load efficiency and electrical performance.
- 19XRV/XR(V)-E equipped with a LF2 VFD that designs with total harmonic distortion (THD)<5% and fully meets IEEE519-1992 requirement. The 19XRV/XR(V)-E becomes a more cost-effective choice for installations with a high percentage of time operating at part load.
- Heat exchangers certified by the European pressure vessels code (PED), and all marine code certifications.
- Touch Pilot control system with strong control and monitoring function during chiller operation. The Touch Pilot control system applies a 10.5 inch high resolution touch screen, which can support more than ten language choices for customer, real time display of operation parameters with pictures makes it more human friendly and comfortable interface for operation.

Options/accessories

- Two types of unit-mounted variable frequency drives (VFDs): standard and high tier, to match different customer requirements in terms of cost and electrical performances (VFD available on 19XRE only)
- Refrigerant isolation valves allow the refrigerant to be stored inside the chiller during service
- Hot gas by-pass for surge prevention during operation at high condensing temperature or for optimized operation at low load conditions
- Spring isolators adapted for all chiller configurations
- Unit-mounted starter reduces machine installation time and expense (VFD available on 19XRE only)
- High-voltage motors available: 400V (19XRE only), 3kV, 3.3kV, 6.3kV, 10kV, 11kV
- CCN/JBus or CCN/BACnet: remote connection
- 21 bar water heat exchanger
- Waterbox with flanges and counterflanges
- Nozzle with flanges (water inlet/outlet with flanges)
- Delivered in multiple sections sections to facilitate the installation
- Refrigerant leak detector module : unit-mounted sensor (not compatible with 19XRE with unit-mounted VFD)

09PE

NEW

Capacity up to 1100 kW

COOLING

The 09PE range is particularly suited to service sector, industrial and healthcare applications..
Drycoolers in the 09PE range are mainly designed for cooling water or glycol/water mix for:

- Condensers for water chillers,
- Free cooling.

These devices are designed to be installed outdoors.

Performance

Flexibility

Intelligence

Energy optimisation

Acoustic optimisation

EUROVENT CERTIFIED PERFORMANCE
www.eurovent-certification.com

CARRIER participates in the ECP programme for HE.
Check ongoing validity of certificate :
www.eurovent-certification.com

Range

09PE is a large modular range, which offers:

- 3 casing lengths (S, M or L module), allowing either the dimensions, the capacity or the power consumption to be optimised,
- A range of sizes, from 1 to 14 fans,
- 2 impeller diameters, 800 or 910 mm,
- Several rotation speeds, from 300 to 1 000 rpm,
- Configuration: horizontal or vertical unit,
- Various combinations of these elements, as well as the choice of a number of options, allow us to provide devices that are adapted to a lange range of applications and environments.

Electrical data

		AC MOTORS								EC MOTOR	
	Speed	900		690		890		680		1000	
	Wiring	Δ		Y		Δ		Y			
		I (A)	P(kW)	I (A)	P(kW)	I (A)	P(kW)	I (A)	P(kW)	I (A)	P(kW)
9010-1		5.3	2.65	3	1.84	3.9	2.13	2.3	1.33	4.4	2.98
9020-1		10.6	5.3	6	3.68	7.8	4.26	4.6	2.66	8.8	5.96
9030-1		15.9	7.95	9	5.52	11.7	6.39	6.9	3.99	13.2	8.94
9040-1		21.2	10.6	12	7.36	15.6	8.52	9.2	5.32	17.6	11.92
9050-1		26.5	13.25	15	9.2	19.5	10.65	11.5	6.65	22	14.9
9040-2		21.2	10.6	12	7.36	15.6	8.52	9.2	5.32	17.6	11.92
9060-2		31.8	15.9	18	11.04	23.4	12.78	13.8	7.98	26.4	17.88
9080-2		42.4	21.2	24	14.72	31.2	17.04	18.4	10.64	35.2	23.84
9100-2		53	26.5	30	18.4	39	21.3	23	13.3	44	29.8
9120-2		63.6	31.8	36	22.08	46.8	25.56	27.6	15.96	52.8	35.76
9140-2		74.2	37.1	42	25.76	54.6	29.82	32.2	18.62	61.6	41.72

I : maximum input current
P : maximum power input
The currents and power actually absorbed depend on the operation point and will be indicated in detail when the unit is selected.

		AC MOTORS												EC MOTOR			
	Speed	900		700		690		560		425		300		510		740	
	Wiring	Δ		Y		Δ		Y		Δ		Y					
		I (A)	P(kW)	I (A)	P(kW)	I (A)	P(kW)	I (A)	P(kW)	I (A)	P(kW)	I (A)	P(kW)	I (A)	P(kW)	I (A)	P(kW)
8010-1		3.65	1.98	2.4	1.43	2.1	0.895	1.05	0.56	0.42	0.194	0.35	0.075	0.49	0.298	1.4	0.918
8020-1		7.3	3.96	4.8	2.86	4.2	1.79	2.1	1.12	0.84	0.388	0.7	0.15	0.98	0.596	2.8	1.836
8030-1		10.95	5.94	7.2	4.29	6.3	2.685	3.15	1.68	1.26	0.582	1.05	0.225	1.47	0.894	4.2	2.754
8040-1		14.6	7.92	9.6	5.72	8.4	3.58	4.2	2.24	1.68	0.776	1.4	0.3	1.96	1.192	5.6	3.672
8050-1		18.25	9.9	12	7.15	10.5	4.475	5.25	2.8	2.1	0.97	1.75	0.375	2.45	1.49	7	4.59
8060-1		21.9	11.88	14.4	8.58	12.6	5.37	6.3	3.36	2.52	1.164	2.1	0.45	2.94	1.788	8.4	5.508
8040-2		14.6	7.92	9.6	5.72	8.4	3.58	4.2	2.24	1.68	0.776	1.4	0.3	1.96	1.192	5.6	3.672
8060-2		21.9	11.88	14.4	8.58	12.6	5.37	6.3	3.36	2.52	1.164	2.1	0.45	2.94	1.788	8.4	5.508
8080-2		29.2	15.84	19.2	11.44	16.8	7.16	8.4	4.48	3.36	1.552	2.8	0.6	3.92	2.384	11.2	7.344
8100-2		36.5	19.8	24	14.3	21	8.95	10.5	5.6	4.2	1.94	3.5	0.75	4.9	2.98	14	9.18
8120-2		43.8	23.76	28.8	17.16	25.2	10.74	12.6	6.72	5.04	2.328	4.2	0.9	5.88	3.576	16.8	11.016
8140-2		51.1	27.72	33.6	20.02	29.4	12.53	14.7	7.84	5.88	2.716	4.9	1.05	6.86	4.172	19.6	12.852

I : maximum input current
P : maximum power input
The currents and power actually absorbed depend on the operation point and will be indicated in detail when the unit is selected.

Designation (Example)

09PE DLN 9124-2 SHI 690A

- Rotation speed
- Induced draught
- Position (H = Horizontal, V = Vertical)
- Coil type (S = Single, Z = Drainable)
- Number of fan lines (1 or 2)
- Number of coil rows
- Number of fans
- Impeller diameter (8 = 800, 9 = 900 mm)
- Module size (S = Short, M = Medium, L = Long)
- D = Drycooler

Options for each application

	Options	Description/Advantages	DRYCOOLER
Protection adapted for the environment	Pre-coated aluminium fins	Improves the resistance of the fins to corrosion. For low corrosion environments.	•
	High efficiency coating on the finned bundle: ALUCOAT®507 or HERESITE	Improves the resistance of the fins to corrosion. For corrosive environments.	•
	Stainless steel tube bundle	For corrosive fluids.	•
	Corrosiveness resistance category C5M	Casing and fan motor assemblies for corrosive environments.	•
	ATEX II 2G/3G	For explosive atmospheres.	•
Quick, simple installation	Terminal box	Connection to the terminals of each motor on the front panel of unit.	•
	Protection cabinet	Protected by a thermal-magnetic circuit breaker on each motor.	•
	Control cabinet with DRY-PIC	Protection for motors and stage regulation provided by an electronic board according to temperature or pressure.	•
	Control cabinet with stages on terminals	Motor protection and stages controlled by the customer control.	•
	Maintenance switch	For stopping individual motors.	•
	Companion flanges	In stainless steel, with gaskets and bolts.	•
	Raised feet	To ensure a good flow of air depending on how the units are installed: against a wall, side by side, etc.	•
	Fins protective screen	Protection against hail, impacts, etc. For forced draught, vertical units.	•
Installation surface constraints	Vertical position	For narrow terraces.	•
Optimised, secure transport	Stacking of 2 identical devices		•
	Skid for transport by container	Secure transport and easy loading/unloading.	•
Optimisation of electrical consumption and sound levels	EC motor (with electronic switching)	Variable speed control from 0 to 100% using a 0/10V signal. With the control cabinet via electronic board option, the device is self-regulating	•
Application for water without glycol	Drainable coil	Device located on a slope to prevent frost - drainage by gravity	•
Free cooling application	Free cooling valve kit	Valves with motor and sensor, controlled by the electronic board. Controlled according to the operation of the drycooler or chiller.	•
Application with adiabatic cooling	ADIABATIC COOLER (water misting into the air flow)	Size of the unit reduced by cooling of the ambient air. Operates completely safely due to the antibacterial treatment applied to the water.	•

Description

Excellent resistance to corrosion

The casing boasts category C3 protection against corrosion, in line with ISO standard 12944-2 – colour RAL 7035 (light grey)

1 **Coil**

Copper tubing and manifolds, high-performance aluminium fins, resistant to fouling.

Anti-shear system for tube bundles.

Pipings : ISO PN16 type 02A rotating flanges in line with NFEN1092 in 304L stainless steel (1 or 2 input(s)/outputs(s) depending on the flow rate).

2 **Fan motor assemblies**

Profiles collars with galvanised steel with polyester powder coating on the internal and external surfaces.

Aluminium and polypropylene impellers.

Class F motor - IP54 - 3PH400V +/-10% 50Hz+/-2% - Standard connection to the motor terminal boxes

Black protective grille compliant with standard BS ISO 12499.

Individual partitioning.

The motors are also available in a 60 Hz version or in other voltages.

3 **Casing**

Galvanised steel with polyester powder coating on the internal and external surfaces. Assembly using stainless rivets and LANTHANUM nuts and bolts for the feet.

4 **Feet**

Galvanised steel with polyester powder coating on the internal and external surfaces.

5 **Protective enclosures on the elbows and manifolds**

Each device is tested:

- The coil sealing is subjected to an underwater airtightness test.
- For devices with the terminal box or electrical cabinet option: rotation tests, dielectric tests, current measurement.

The 09PE range complies with the following European directives:

- Machinery Directive 2006/42/EC,
- EMC Directive 2004/108/EC,
- Pressure Equipment Directive (PED) 97/23 EC.

Sound levels

		SOUND PRESSURE LEVEL (Lp) * /SOUND POWER LEVEL (Lw)** - dB(A)									
		AC MOTORS								EC MOTOR	
	Speed	900		690		890		680		1000	
	Wiring	Δ		Y		Δ		Y			
		Lp	Lw	Lp	Lw	Lp	Lw	Lp	Lw	Lp	Lw
9010-1		53,8	85,4	45,6	77,2	50,1	81,7	42,5	74,1	56,6	88,2
9020-1		56,6	88,4	48,4	80,2	52,9	84,7	45,3	77,1	59,4	91,2
9030-1		58,2	90,2	50	82	54,5	86,5	46,9	78,9	61	93
9040-1		59,2	91,4	51	83,2	55,5	87,7	47,9	80,1	62	94,2
9050-1		60	92,4	51,8	84,2	56,3	88,7	48,7	81,1	62,8	95,2
9040-2		59,5	91,4	51,3	83,2	55,8	87,7	48,2	80,1	62,3	94,2
9060-2		61,1	93,2	52,9	85	57,4	89,5	49,8	81,9	63,9	96
9080-2		62,1	94,4	53,9	86,2	58,4	90,7	50,8	83,1	64,9	97,2
9100-2		62,9	95,4	54,7	87,2	59,2	91,7	51,6	84,1	65,7	98,2
9120-2		63,5	96,2	55,3	88	59,8	92,5	52,2	84,9	66,3	99
9140-2		64	96,9	55,8	88,7	60,3	93,2	52,7	85,6	66,8	99,7

		SOUND PRESSURE LEVEL (Lp) * /SOUND POWER LEVEL (Lw)** - dB(A)															
		AC MOTORS												EC MOTOR			
	Speed	900		700		690		560		425		300		510		740	
	Wiring	Δ		Y		Δ		Y		Δ		Y					
		Lp	Lw	Lp	Lw	Lp	Lw	Lp	Lw	Lp	Lw	Lp	Lw	Lp	Lw	Lp	Lw
8010-1		50,2	81,7	42,2	73,7	38,4	69,9	33	64,5	27,3	58,8	18,9	50,4	32,9	64,4	43,1	74,6
8020-1		53,1	84,7	45,1	76,7	41,3	72,9	35,9	67,5	30,2	61,8	21,8	53,4	35,8	67,4	46,0	77,6
8030-1		54,7	86,5	46,7	78,5	42,9	74,7	37,5	69,3	31,8	63,6	23,4	55,2	37,4	69,2	47,6	79,4
8040-1		55,9	87,7	47,9	79,7	44,1	75,9	38,7	70,5	33	64,8	24,6	56,4	38,6	70,4	48,8	80,6
8050-1		56,7	88,7	48,7	80,7	44,9	76,9	39,5	71,5	33,8	65,8	25,4	57,4	39,4	71,4	49,6	81,6
8060-1		57,4	89,5	49,4	81,5	45,6	77,7	40,2	72,3	34,5	66,6	26,1	58,2	40,1	72,2	50,3	82,4
8040-2		56	87,7	48	79,7	44,2	75,9	38,8	70,5	33,1	64,8	24,7	56,4	38,7	70,4	48,9	80,6
8060-2		57,6	89,5	49,6	81,5	45,8	77,7	40,4	72,3	34,7	66,6	26,3	58,2	40,3	72,2	50,5	82,4
8080-2		58,7	90,7	50,7	82,7	46,9	78,9	41,5	73,5	35,8	67,8	27,4	59,4	41,4	73,4	51,6	83,6
8100-2		59,6	91,7	51,6	83,7	47,8	79,9	42,4	74,5	36,7	68,8	28,3	60,4	42,3	74,4	52,5	84,6
8120-2		60,3	92,5	52,3	84,5	48,5	80,7	43,1	75,3	37,4	69,6	29	61,2	43	75,2	53,2	85,4
8140-2		60,8	93,2	52,8	85,2	49	81,4	43,6	76	37,9	70,3	29,5	61,9	43,5	75,9	53,7	86,1

* Values measured at 10 m for horizontal units in free field, directivity 2, in line with the coil. Tolerance ±3dB.
** Only the sound power level is characteristic of the unit. These values are obtained in compliance with the ISO 3744 standard.
The difference between the sound power level and pressure level varies according to the site. To determine the unit's sound pressure level, recalculate it using the sound power level of the unit and the site conditions (you may need to consult an acoustical engineer).
As the sound emitted by the unit is not uniform in all directions, for a point 10 m away in line with the fans, the recalculated pressure value must be increased by approximately 4 dB.

Dimensions

Horizontal Position - Induced Draught

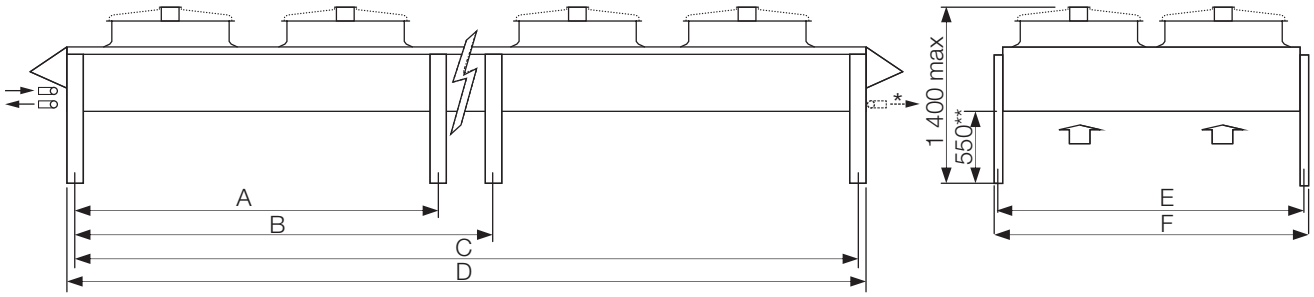

Unit shown has 2 fan lines - no. of motors between the feet is not contractually binding

* for units with input/output tubes on the opposite side
** standard feet

	No. of motors	1	2	3	4	5	6	4	6	8	10	12	14
DSN S module	A	-	-	-	-	1840	1840	-	-	-	1840	1840	1840
	B	-	-	-	-	2790	3740	-	-	-	2790	3740	4690
	C	830	1780	2730	3680	4630	5580	1780	2730	3680	4630	5580	6530
	D	950	1900	2850	3800	4750	5700	1900	2850	3800	4750	5700	6650
	Max empty weight without options +/-10% (kg)	233	369	503	666	809	928	638	875	1135	1393	1617	1874
DMN M module	A	-	-	-	3140	3140		-	-	3140	3140	4740	3140
	B	-	-	-	-	4740		-	-	-	4740	-	7940
	C	1480	3080	4680	6280	7880		3080	4680	6280	7880	9480	11080
	D	1600	3200	4800	6400	8000		3200	4800	6400	8000	9600	11200
	Max empty weight without options +/-10% (kg)	314	523	712	958	1183		918	1298	1645	2029	2388	2772
DLN L module	A	-	-	-	3740	3740		-	-	3740	3740	5640	
	B	-	-	-	-	5640		-	-	-	5640	-	
	C	1780	3680	5580	7480	9380		3680	5580	7480	9380	11280	
	D	1900	3800	5700	7600	9500		3800	5700	7600	9500	11400	
	Max empty weight without options +/-10% (kg)	352	599	846	1110	1373		1036	1474	1929	2384	2806	
All	E	1240						2360					
	F	1280						2400					

All dimensions are in millimeters.

Dimensions

Vertical position

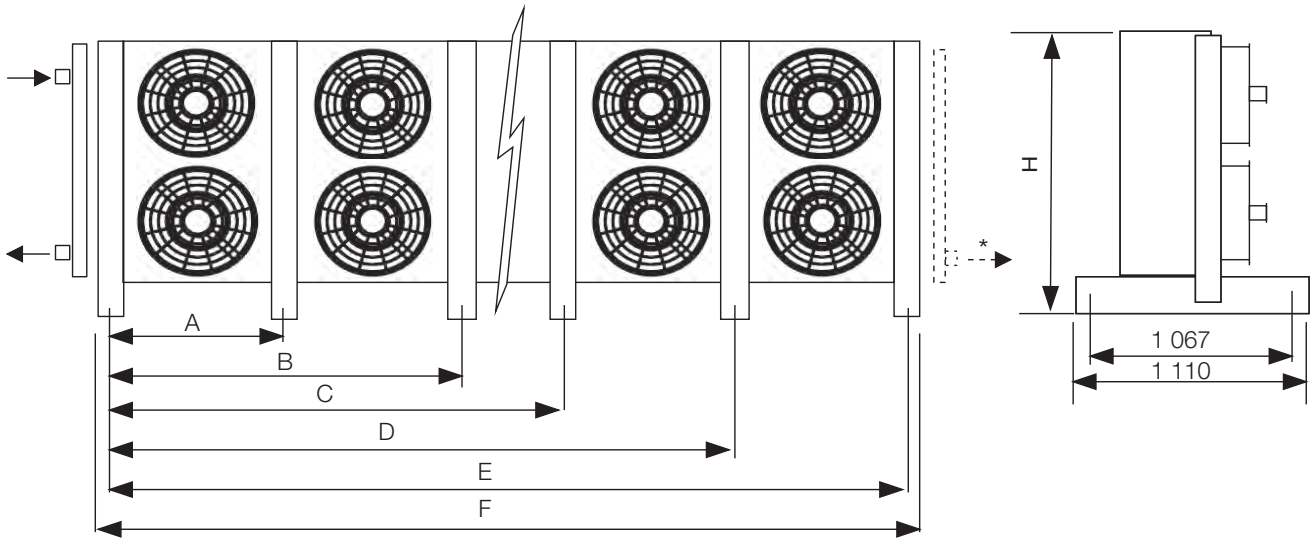

Unit shown has 2 fan lines - no. of motors between the feet is not contractually binding
* for units with input/output tubes on the opposite side

	No. of motors	1	2	3	4	5	6	4	6	8	10	12	14
DSN S module	A	-	-	-	1840	1840	1840	-	-	1840	1840	1840	1840
	B	-	-	-	-	2790	3740	-	-	-	2790	3740	4690
	C	-	-	-	-	-	-	-	-	-	-	-	-
	D	-	-	-	-	-	-	-	-	-	-	-	-
	E	830	1780	2730	3680	4630	5580	1780	2730	3680	4630	5580	6530
	F	950	1900	2850	3800	4750	5700	1900	2850	3800	4750	5700	6650
	Max empty weight without options +/-10% (kg)	282	419	554	705	915	1039	684	922	1181	1497	1727	1983
DMN M module	A	-	-	1540	1540	1540		-	1540	1540	1540	3140	3140
	B	-	-	3140	4740	3140		-	3140	4740	3140	6340	4740
	C	-	-	-	-	4740		-	-	-	4740	-	6340
	D	-	-	-	-	6340		-	-	-	6340	-	7940
	E	1480	3080	4680	6280	7880		3080	4680	6280	7880	9480	11080
	F	1600	3200	4800	6400	8000		3200	4800	6400	8000	9600	11200
	Max empty weight without options +/-10% (kg)	356	558	835	1046	1339		927	1383	1734	2187	2464	2920
DLN L module	A	-	-	1840	1840	1840		-	1840	1840	1840	3740	
	B	-	-	3740	5640	3740		-	3740	5640	3740	7540	
	C	-	-	-	-	5640		-	-	-	5640	-	
	D	-	-	-	-	7540		-	-	-	7540	-	
	E	1780	3680	5580	7480	9380		3680	5580	7480	9380	11280	
	F	1900	3800	5700	7600	9500		3800	5700	7600	9500	11400	
	Max empty weight without options +/-10% (kg)	399	639	972	1204	1537		1053	1572	1986	2501	2842	
All	H	1375						2495					

All dimensions are in millimeters.

09VE

NEW

COOLING

Drycoolers in this range are mainly designed for cooling water or glycol/water mix for:

- Condensers for water chillers,
- Free cooling.

These devices are designed to be installed outdoors.

Slim design

Acoustic comfort

40% smaller footprint

EUROVENT CERTIFIED PERFORMANCE
www.eurovent-certification.com

CARRIER participates in the ECP programme for HE.
Check ongoing validity of certificate :
www.eurovent-certification.com

Range

- More than 220 models
- A range of sizes, from 6 to 20 fans
- 2 impeller diameters, 800 or 910 mm
- Several rotation speeds, from 300 to 1 270 rpm
- Various combinations of these elements, as well as the choice of a number of options, allow us to provide devices that are adapted to a wide range of applications and environments.

Electrical specifications

I: maximum input current

P: maximum power input

The currents and power actually absorbed depend on the operation point and will be indicated in detail when the unit is selected.

		AC MOTORS (A9)								EC MOTOR (E9)	
		Impeller Ø 910 mm								Impeller Ø 910 mm	
	Speed	1270		980		900		690		1000	
	Wiring	Δ		Y		Δ		Y			
		I (A)	P(kW)	I (A)	P(kW)	I (A)	P(kW)	I (A)	P(kW)	I (A)	P(kW)
1060		46.80	27.60	28.80	17.40	31.80	15.90	18.00	11.04	26.40	17.88
1080		62.40	36.80	38.40	23.20	42.40	21.20	24.00	14.72	35.20	23.84
1100		78.00	46.00	48.00	29.00	53.00	26.50	30.00	18.40	44.00	29.80
1120		93.60	55.20	57.60	34.80	63.60	31.80	36.00	22.08	52.80	35.76
1140		109.20	64.40	67.20	40.60	74.20	37.10	42.00	25.76	61.60	41.72
1160		124.80	73.60	76.80	46.40	84.80	42.40	48.00	29.44	70.40	47.68
1180	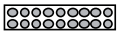	140.40	82.80	86.40	52.20	95.40	47.70	54.00	33.12	79.20	53.64
1200	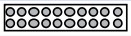	156.00	92.00	96.00	58.00	106.00	53.00	60.00	36.80	88.00	59.60

		AC MOTORS (A8)												EC MOTOR (E8)			
		Impeller Ø 800 mm												Impeller Ø 800 mm			
	Speed	900		700		690		560		425		300		510		740	
	Wiring	Δ		Y		Δ		Y		Δ		Y					
		I (A)	P(kW)	I (A)	P(kW)	I (A)	P(kW)	I (A)	P(kW)	I (A)	P(kW)	I (A)	P(kW)	I (A)	P(kW)	I (A)	P(kW)
1060		21.90	11.88	14.40	8.58	12.60	5.37	6.30	3.36	2.52	1.16	2.10	0.45	2.94	1.78	8.40	5.50
1080		29.20	15.84	19.20	11.44	16.80	7.16	8.40	4.48	3.36	1.55	2.80	0.60	3.92	2.38	11.20	7.34
1100		36.50	19.80	24.00	14.30	21.00	8.95	10.50	5.60	4.20	1.94	3.50	0.75	4.90	2.98	14.00	9.18
1120		43.80	23.76	28.80	17.16	25.20	10.74	12.60	6.72	5.04	2.32	4.20	0.90	5.88	3.57	16.80	11.01
1140		51.10	27.72	33.60	20.02	29.40	12.53	14.70	7.840	5.88	2.71	4.90	1.05	6.86	4.17	19.60	12.85
1160	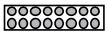	58.40	31.68	38.40	22.88	33.60	14.32	16.80	8.96	6.72	3.10	5.60	1.20	7.84	4.76	22.40	14.68
1180	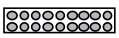	65.70	35.64	43.20	25.74	37.80	16.11	18.90	10.08	7.56	3.49	6.30	1.35	8.82	5.36	25.20	16.52
1200	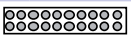	73.00	39.60	48.00	28.60	42.00	17.90	21.00	11.20	8.40	3.88	7.00	1.50	9.80	5.96	28.00	18.36

Designation (Example)

09VE 1 16 4 UI 690 A 9

- Impeller diameter (8 = 800 mm, 9 = 910 mm)
- Motor type
  - A: 3-ph 400 V 50 Hz
  - B: AC- other supply
  - E: EC
  - M: 1st stage with EC motor
- Rotation speed
- Number of rows
- Number of fans

Options for each application

	Options	Description/Assets
Protection adapted for the environment	Pre-coated aluminium fins	Improves the resistance of the fins to corrosion For low corrosion environments
	High-efficiency coating on the finned bundle: ALUCOAT®507 or HERESITE	Improves the resistance of the fins to corrosion For relatively corrosive environments
	Stainless steel tubing bundle	For corrosive fluids
	Corrosiveness resistance category C5M	Casing and fan motor assemblies for corrosive environments
Quick and simple installation	Terminal box	Connection to the terminals of each motor on the front panel of the device
	Protection cabinet	Protected by a thermal-magnetic circuit breaker on each motor
	Control cabinet with DRY-PIC	Protection for motors and stage regulation provided by an electronic board according to temperature
	Control cabinet with stages on terminals	Motor protection and stages controlled by customer regulation
	Flanges	NFE 1092-1 type 01A PN16 steel
	Counter-flanges	In steel, with gaskets and bolts
	Fins protective screen	Impact protection
Optimisation of electrical consumption and noise	EC (electrically commutated) motor	Variable speed control from 0 to 100% using a 0/10V signal. With the control cabinet via electronic board option, the device is self-regulating
Application for water without glycol	Drainable coil	Device located on a slope to prevent frost - Drainage by gravity
Free cooling application	Free cooling valve kit	Valves with motor and sensor, controlled by the electronic board Controlled according to the operation of the drycooler or chiller
Adiabatic cooling application	ADIABATIC COOLER (water misting into the air flow)	Size of the unit reduced by cooling of the ambient air Operates completely safely due to the antibacterial treatment applied to the water

Description

Excellent resistance to corrosion

The casing boasts category C3 protection against corrosion, in line with ISO standard 12944-2.

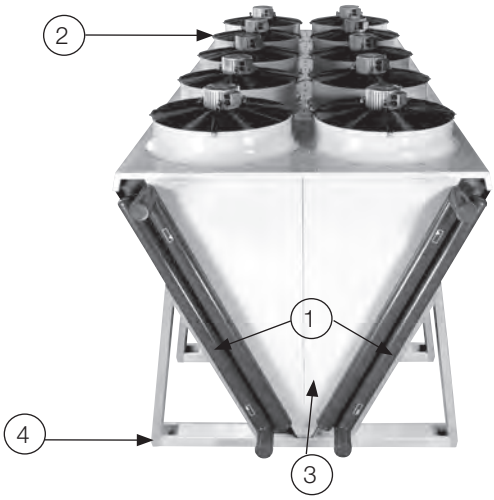

(1) **2 Coils**

Copper tubes and high-performance aluminium fins, resistant to fouling.

Manifolds and piping: steel painted with graphite grey RAL 7024.

(2) **Fan motor assemblies**

Galvanised steel profiled collars with polyester powder coating on the internal and external faces (light grey RAL 7035 paint) or composite collar (black RAL 9005) for 1270/980 rpm motor.

Aluminium + polypropylene propeller.

Class F motors - IP54 - TRI400V +/-10% 50Hz+/-2% - Standard connection to motor terminal boxes.

Black protective grille compliant with standard BS ISO 12499.

The motors are also available in a 60 Hz version or in other voltages.

(3) **Casing**

Galvanised steel with polyester powder coating on the internal and external faces (light grey RAL 7035 paint).

(4) **Feet**

Galvanised steel with polyester powder coating on the internal and external faces (light grey RAL 7035 paint).

Each device is tested:

- The air tightness of the coil is subjected to an underwater airtightness test.
- For devices with the terminal box or electrical cabinet option: rotation tests, dielectric tests, current measurement.

The range complies with the following European directives:

- Machinery Directive 2006/42/EC,
- EMC Directive 2004/108/EC,
- Pressure Equipment Directive (PED) 97/23 EC.

Sound levels

		SOUND PRESSURE LEVEL (Lp) * /SOUND POWER LEVEL (Lw)** - dB(A)									
		AC MOTORS (A9)								EC MOTOR (E9)	
		Impeller Ø 910mm								Impeller Ø 910mm	
	Speed	1270		980		900		690		1000	
	Wiring	Δ		Y		Δ		Y			
		Lp	Lw	Lp	Lw	Lp	Lw	Lp	Lw	Lp	Lw
1060		70,2	102,4	61,7	93,9	62,7	94,9	55,8	88	64,1	96,3
1080		71,3	103,6	62,8	95,1	63,8	96,1	56,9	89,2	65,2	97,5
1100		72,1	104,6	63,6	96,1	64,6	97,1	57,7	90,2	66	98,5
1120		72,8	105,4	64,3	96,9	65,3	97,9	58,4	91	66,7	99,3
1140		73,3	106,1	64,8	97,6	65,8	98,6	58,9	91,7	67,2	100
1160		73,8	106,6	65,3	98,1	66,3	99,1	59,4	92,2	67,7	100,5
1180		74,1	107,2	65,6	98,7	66,6	99,7	59,7	92,8	68	101,1
1200		74,5	107,6	66	99,1	67	100,1	60,1	93,2	68,4	101,5

		SOUND PRESSURE LEVEL (Lp) * /SOUND POWER LEVEL (Lw)** - dB(A)															
		AC MOTORS (A8)												EC MOTOR (E8)			
		Impeller Ø 800mm												Impeller Ø 800mm			
	Speed	900		700		690		560		425		300		510		740	
	Wiring	Δ		Y		Δ		Y		Δ		Y					
		Lp	Lw	Lp	Lw	Lp	Lw	Lp	Lw	Lp	Lw	Lp	Lw	Lp	Lw	Lp	Lw
1060		57	89,2	49,8	82	46,5	78,7	41,4	73,6	35,8	68	27,1	59,3	41,5	73,7	50,1	82,3
1080		58,1	90,4	50,9	83,2	47,6	79,9	42,5	74,8	36,9	69,2	28,2	60,5	42,6	74,9	51,2	83,5
1100		58,9	91,4	51,7	84,2	48,4	80,9	43,3	75,8	37,7	70,2	29	61,5	43,4	75,9	52	84,5
1120		59,6	92,2	52,4	85	49,1	81,7	44	76,6	38,4	71	29,7	62,3	44,1	76,7	52,7	85,3
1140		60,1	92,9	52,9	85,7	49,6	82,4	44,5	77,3	38,9	71,7	30,2	63	44,6	77,4	53,2	86
1160		60,6	93,4	53,4	86,2	50,1	82,9	45	77,8	39,4	72,2	30,7	63,5	45,1	77,9	53,7	86,5
1180		60,9	94	53,7	86,8	50,4	83,5	45,3	78,4	39,7	72,8	31	64,1	45,4	78,5	54	87,1
1200		61,3	94,4	54,1	87,2	50,8	83,9	45,7	78,8	40,1	73,2	31,4	64,5	45,8	78,9	54,4	87,5

* Values measured at 10 m for horizontal units in free field, directivity 2, in line with the coil. Tolerance ±3dB.
** Only the sound power level is characteristic of the unit. These values are obtained in compliance with the ISO 3744 standard.
The difference between the sound power level and pressure level varies according to the site. To determine the unit's sound pressure level, recalculate it using the sound power level of the unit and the site conditions (you may need to consult an acoustical engineer).
As the sound emitted by the unit is not uniform in all directions, for a point 10 m away in line with the fans, the recalculated pressure value must be increased by approximately 4 dB.

Dimensions

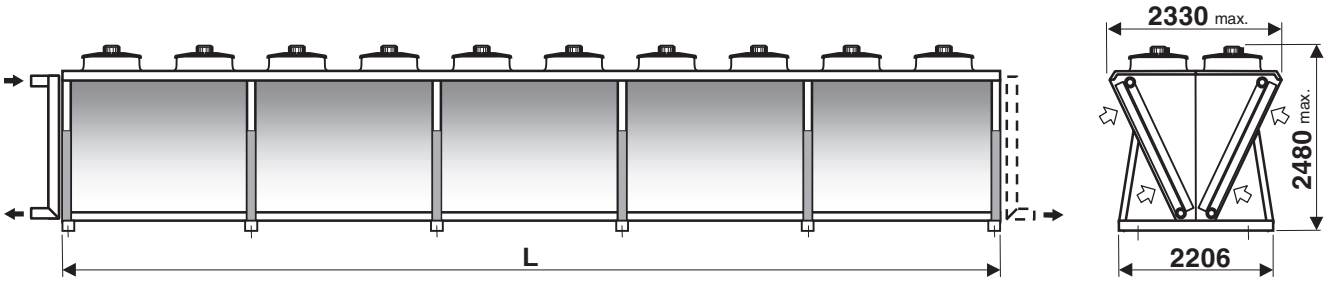

	1060	1080	1100	1120	1140	1160	1180	1200
L (mm)	3550	4700	5850	7000	8150	9300	10450	11660
Max. empty weight without options (kg)	1700	2100	2600	3000	3500	4000	4500	4900

Up to size 1180, these units can be transported by container.

16LJ01-03
16LJ-A11-82

NEW

Nominal cooling capacity 83-3956 kW

COOLING

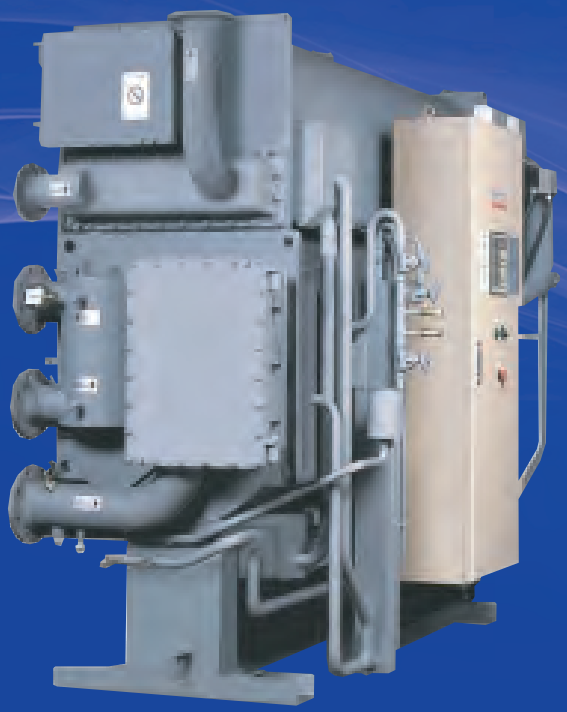

Complete range 80 to 4000 kW

HFC-refrigerant free

Hot water source from

COP up to 0.78

The Carrier 16LJ & 16LJ-A single-effect absorption chillers are designed to provide chilled water from waste heat sources generated from industrial processes and cogeneration systems.

Carrier absorption chillers allow diversification of critical cooling requirements. Critical cooling loads are met with minimal electrical power input.

They allow smaller emergency generators compared to an electrical driven chiller.

The units are ozone-safe and CFC-free. Cooling requirements are met without chlorine-based refrigerants.

They reduce the contribution to global warming and minimise the global impact by greatly reducing electricity consumption and production of greenhouse gases.

The solution inhibitor has no impact on the environment.

An absorption chiller does not utilise mechanical moving parts, and this leads to quiet, vibration-free operation.

The use of high-efficiency heat transfer surface has reduced the space required for installation of the absorption chiller, resulting in a smaller footprint.

Physical data

16LJ/16LJ-A		LJ			LJ-A									
Size		01	02	03	11	12	13	14	21	22	23	24	31	32
Capacity	kW	83	131	166	264	316	387	475	545	633	738	844	949	1055
Chilled water system*														
Flow rate	l/sec	3.58	5.64	7.14	12.6	15.1	18.5	22.7	26	30.3	35.3	40.3	45.3	50.3
Pressure drop	kPa	73	60	60	72.2	78.4	48.5	52.9	46.8	50.2	102	105	104	106
Connection(ANSI)	inch	2	2 1/2	2 1/2	3	3	4	4	5	5	5	5	6	6
Retention volume	m^3	0.06	0.08	0.08	0.11	0.13	0.15	0.17	0.22	0.25	0.28	0.30	0.35	0.38
Cooling water system*														
Flow rate	l/sec	5.4	8.5	10.8	20.8	25	30.6	37.5	43.1	50	58.3	66.7	75	83.3
Pressure drop	kPa	23	16	15	78.8	81.8	86.6	95.4	89.1	93.4	58.4	62.5	49.8	51.6
Connection(ANSI)	inch	3	4	4	5	5	5	5	6	6	8	8	8	8
Retention volume	m^3	0.13	0.18	0.23	0.33	0.37	0.40	0.45	0.58	0.63	0.69	0.76	0.98	1.05
Hot water system*														
Flow rate	l/sec	3.28	5.17	6.56	8.4	10.1	12.3	15.1	17.3	20.1	23.4	26.8	30.1	33.5
Pressure drop	kPa	58	41	41	24.7	26.4	65.6	72.8	31.5	32.5	22.0	22.1	22.4	22.3
Connection(ANSI)	inch	2	2 1/2	2 1/2	4	4	4	4	5	5	6	6	6	6
Retention volume	m^3	0.04	0.04	0.07	0.07	0.08	0.09	0.10	0.13	0.14	0.15	0.17	0.21	0.22
Rupture disk connection	inch	2	2	2	2	2	2	2	2	2	2	2	2	2
Dimmensions														
Length (L)	mm	1745	2450	2450	2 740	2 740	3 750	3 750	3 850	3 850	4 870	4 870	4 920	4 920
Height (H)	mm	2115	2115	2115	2 330	2 330	2 330	2 330	2 480	2 480	2 480	2 480	2 775	2 775
Width (W)	mm	1255	1255	1435	1 400	1 400	1 400	1 400	1 560	1 560	1 560	1 560	1 630	1 630
Tube removal	mm	900	1350	1350	2 400	2 400	3 400	3 400	3 400	3 400	4 500	4 500	4 500	4 500
Weight														
Operation weight	kg	2070	2680	3150	4 000	4 200	5 200	5 500	6 600	6 900	8 100	8 600	10 500	11 000
Max shipping weight	kg	1820	2380	2720	3 500	3 600	4 500	4 700	5 600	5 900	7 000	7 300	9 000	9 300
Shipping method	u	1	1	1	1	1	1	1	1	1	1	1	1	1
Power supply	V-ph-Hz	400-3-50			400-3-50									
Apparent power	kVA	3.1	3.1	3.1	5.0	5.0	5.0	6.8	6.9	6.9	6.9	6.9	10.5	10.5
Total electric current	A	4.8	4.8	4.8	7.5	7.5	7.5	10.2	10.3	10.3	10.3	10.3	15.5	15.5
Absorbent pump N°1, power input	kW	0.75	0.75	0.75	1.1	1.1	1.1	2.2	2.2	2.2	2.2	2.2	3.0	3.0
Absorbent pump N°1, electric current	A	2.2	2.2	2.2	2.8	2.8	2.8	5.5	5.5	5.5	5.5	5.5	7.5	7.5
Absorbent pump N°2, power input	kW	/	/	/	0.3	0.3	0.3	0.3	0.4	0.4	0.4	0.4	1.5	1.5
Absorbent pump N°2, electric current	A	/	/	/	1.4	1.4	1.4	1.4	1.5	1.5	1.5	1.5	4.7	4.7
Refrigerent pump, power input	kW	0.2	0.2	0.2	0.2	0.2	0.2	0.2	0.2	0.2	0.2	0.2	0.2	0.2
Refrigerent pump, electric current	A	0.7	0.7	0.7	1.3	1.3	1.3	1.3	1.3	1.3	1.3	1.3	1.3	1.3
Purge pump, power input	kW	0.4	0.4	0.4	0.4	0.4	0.4	0.4	0.4	0.4	0.4	0.4	0.4	0.4
Purge pump, electric current	A	1.1	1.1	1.1	1.15	1.15	1.15	1.15	1.15	1.15	1.15	1.15	1.15	1.15
PD cell heater	kW	0.038	0.038	0.038	0.038	0.038	0.038	0.038	0.038	0.038	0.038	0.038	0.038	0.038
Control circuit	kW	0.3	0.3	0.3	0.3	0.3	0.3	0.3	0.3	0.3	0.3	0.3	0.3	0.3

* Condition for LJ 12,2/6,7 °C (Fouling Factor = 0.0176 m2°C/kW)
29.4/38.4°C (Fouling Factor = 0.044 m2°C/kW)
95/86°C (Fouling Factor = 0.0176 m2°C/kW)

* Condition for LJ-A 12/7 °C (Fouling Factor = 0.018 m2°C/kW)
29.4/36.3°C (Fouling Factor = 0.044 m2°C/kW)
90/80°C (Fouling Factor = 0.018 m2°C/kW)

Notes : These performance data are provided to support early design activity. For selection outside ARI operating conditions, contact Carrier

Physical data

16LJ-A		LJ-A												
Size		41	42	51	52	53	61	62	63	71	72	73	81	82
Capacity	kW	1 178	1 319	1 477	1 653	1 846	2 110	2 373	2 637	2 901	3 165	3 428	3 692	3 956
Chilled water system*														
Flow rate	l/sec	56.4	63.1	70.6	78.9	88.3	100.8	113.3	126.1	138.6	151.1	163.9	176.4	188.9
Pressure drop	kPa	102	88.5	74.3	37.4	49.3	95.6	45.9	59.9	114	50.7	62.7	50.8	61.7
Connection(ANSI)	inch	8	8	8	8	8	10	10	10	12	12	12	14	14
Retention volume	m^3	0.49	0.56	0.70	0.77	0.83	1.06	1.13	1.21	1.43	1.53	1.63	1.82	1.94
Cooling water system*														
Flow rate	l/sec	93.1	104.2	116.7	130.6	145.8	166.7	187.5	208.3	229.2	250	270.8	291.7	312.5
Pressure drop	kPa	52.8	55.4	94.4	128	43.1	78.1	105	70.6	45.6	57.4	70.8	59.2	71.4
Connection(ANSI)	inch	10	10	12	12	12	14	14	14	16	16	16	16	16
Retention volume	m^3	1.31	1.41	1.97	2.13	2.27	2.87	3.05	3.23	3.79	4.02	4.23	4.75	5.10
Hot water system*														
Flow rate	l/sec	37.4	41.8	46.8	52.4	58.5	66.9	75.2	83.6	91.9	101	109	117	126
Pressure drop	kPa	21.7	22.1	63.8	28.6	37.8	27.2	36.4	47.5	37.9	47.9	59.2	49.3	59.8
Connection(ANSI)	inch	8	8	8	8	8	10	10	10	10	10	10	10	10
Retention volume	m^3	0.29	0.32	0.35	0.37	0.40	0.69	0.72	0.76	0.82	0.86	0.90	0.99	1.03
Rupture disk connection	inch	2	2	2	2	2	2	2	2	2	2	2	2	2
Dimmensions														
Length (L)	mm	5 070	5 070	5 210	5 750	6 250	5 750	6 250	6 750	6 490	6 990	7 490	7 090	7 590
Height (H)	mm	3 015	3 015	3 390	3 390	3 390	3 790	3 790	3 790	3 950	3 950	3 950	4 210	4 210
Width (W)	mm	1 750	1 750	1 990	1 990	1 990	2 420	2 420	2 420	2 650	2 650	2 650	2 820	2 820
Tube removal	mm	4 500	4 500	4 600	5 200	5 700	5 200	5 700	6 200	5 700	6 200	6 700	6 200	6 700
Weight														
Operation weight	kg	13 000	13 600	18 400	20 000	21 400	28 300	30 300	32 400	38 700	41 200	43 700	46 900	49 600
Max shipping weight	kg	10 900	11 300	15 400	16 600	17 900	11 500	12 200	13 100	16 000	17 000	18 000	19 000	19 900
Shipping method	u	1	1	1	1	1	2	2	2	2	2	2	2	2
Power supply	V-ph-Hz	400-3-50												
Apparent power	kVA	10.6	10.6	10.6	10.6	10.8	18.7	18.7	18.7	24.2	24.2	25.6	25.6	25.6
Total electric current	A	15.6	15.6	15.6	15.6	15.9	27.4	27.4	27.4	35.3	35.3	37.4	37.4	37.4
Absorbent pump N°1, power input	kW	3.0	3.0	3.0	3.0	3.0	7.5	7.5	7.5	7.5	7.5	7.5	7.5	7.5
Absorbent pump N°1, electric current	A	7.5	7.5	7.5	7.5	7.5	19.0	19.0	19.0	19.0	19.0	19.0	19.0	19.0
Absorbent pump N°2, power input	kW	1.5	1.5	1.5	1.5	1.5	1.5	1.5	1.5	3.7	3.7	3.7	3.7	3.7
Absorbent pump N°2, electric current	A	4.7	4.7	4.7	4.7	5.0	5.0	5.0	5.0	11.0	11.0	11.0	11.0	11.0
Refrigerent pump, power input	kW	0.3	0.3	0.3	0.3	0.3	0.3	0.3	0.3	0.75	0.75	1.2	1.2	1.2
Refrigerent pump, electric current	A	1.4	1.4	1.4	1.4	1.4	1.4	1.4	1.4	2.5	2.5	4.6	4.6	4.6
Purge pump, power input	kW	0.4	0.4	0.4	0.4	0.4	0.4	0.4	0.4	0.75	0.75	0.75	0.75	0.75
Purge pump, electric current	A	1.15	1.15	1.15	1.15	1.15	1.15	1.15	1.15	1.9	1.9	1.9	1.9	1.9
PD cell heater	kW	0.038	0.038	0.038	0.038	0.038	0.038	0.038	0.038	0.038	0.038	0.038	0.038	0.038
Control circuit	kW	0.3	0.3	0.3	0.3	0.3	0.3	0.3	0.3	0.3	0.3	0.3	0.3	0.3

* Condition for LJ-A 12/7 °C (Fouling Factor = 0.018 m2°C/kW)
29.4/36.3°C (Fouling Factor = 0.044 m2°C/kW)
90/80°C (Fouling Factor = 0.018 m2°C/kW)

Notes : These performance data are provided to support early design activity. For selection outside ARI operating conditions, contact Carrier

The absorption cycle

The absorption cooling cycle, like the mechanical vapour compression refrigeration cycle, utilizes the latent heat of evaporation of a refrigerant to remove heat from the entering chilled water. Vapour compression refrigeration systems use a chlorine-based refrigerant and a compressor to transport the refrigerant vapour to be condensed in the condenser. The absorption cycle, however, uses water as the refrigerant and an absorbent lithium bromide solution to absorb the vaporised refrigerant. Heat is then applied to the solution to release the refrigerant vapour from the absorbent. The refrigerant vapour is then condensed in the condenser.

The basic single-effect absorption cycle (see Figure 1) includes generator, condenser, evaporator and absorber with refrigerant (liquid) and lithium bromide as the working solutions. The generator utilizes a heat source (steam or hot water) to vaporise the diluted lithium bromide solution. The water vapour that is released travels to the condenser where it is condensed back into a liquid, transferring the heat to the cooling tower water. Once condensed, the liquid refrigerant is distributed over the evaporator tubes, removing the heat from the chilled water and vaporising the liquid refrigerant. The concentrated lithium bromide solution from the generator passes into the absorber, absorbs the refrigerant vapour solution from the evaporator and dilutes itself. The diluted lithium bromide solution is then pumped back to the generator where the cycle is started again.

Figure 1 - Simplified absorption cycle

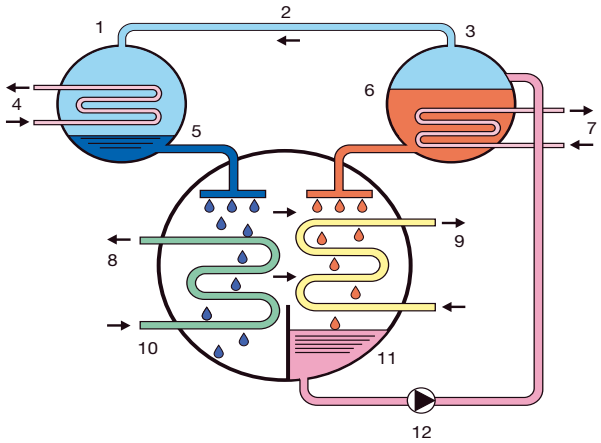

Legend

1. Condenser
2. Refrigerant vapour
3. Generator
4. Cooling water
5. Liquid refrigerant
6. Concentrated solution
7. Heat source
8. Chilled water
9. Cooling water
10. Evaporator
11. Absorber
12. Absorbent pump

Cooling cycle schematic

LJ 01/02/03

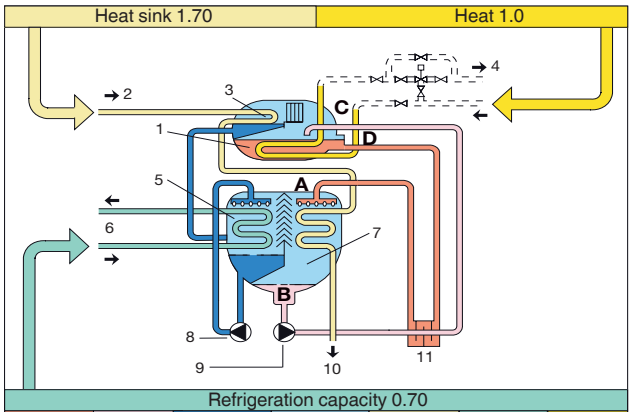

LJA 11-82

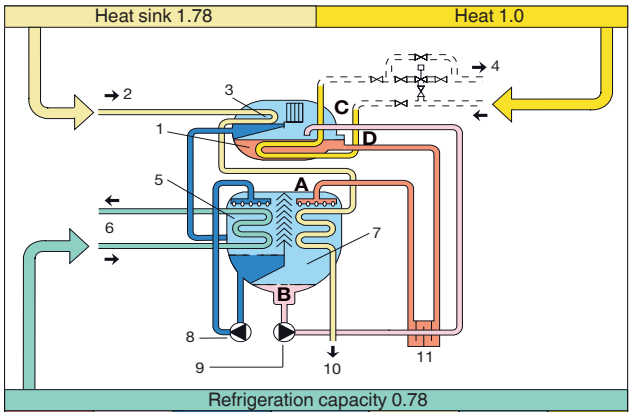

Legend

1. Generator
2. Cooling water
3. Condenser
4. Hot water
5. Evaporator
6. Chilled water
7. Absorber
8. Refrigerant pump
9. Absordent pump
10. Heat exchanger
11. Cooling water
12. Concentrated solution
13. Diluted solution
14. Liquid solution
15. Refrigerant vapour
16. Cooling water
17. Chilled water
18. Hot water

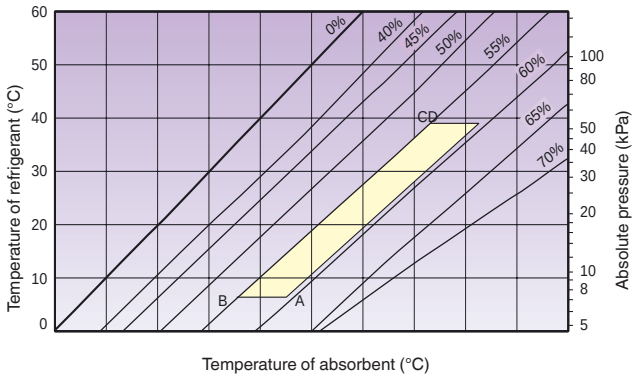

Type key

16 LJ-A - 11

- 11 — Capacity code
- LJ-A — Unit type: Single-effect, hot water-fired absorption chillers

Component identification

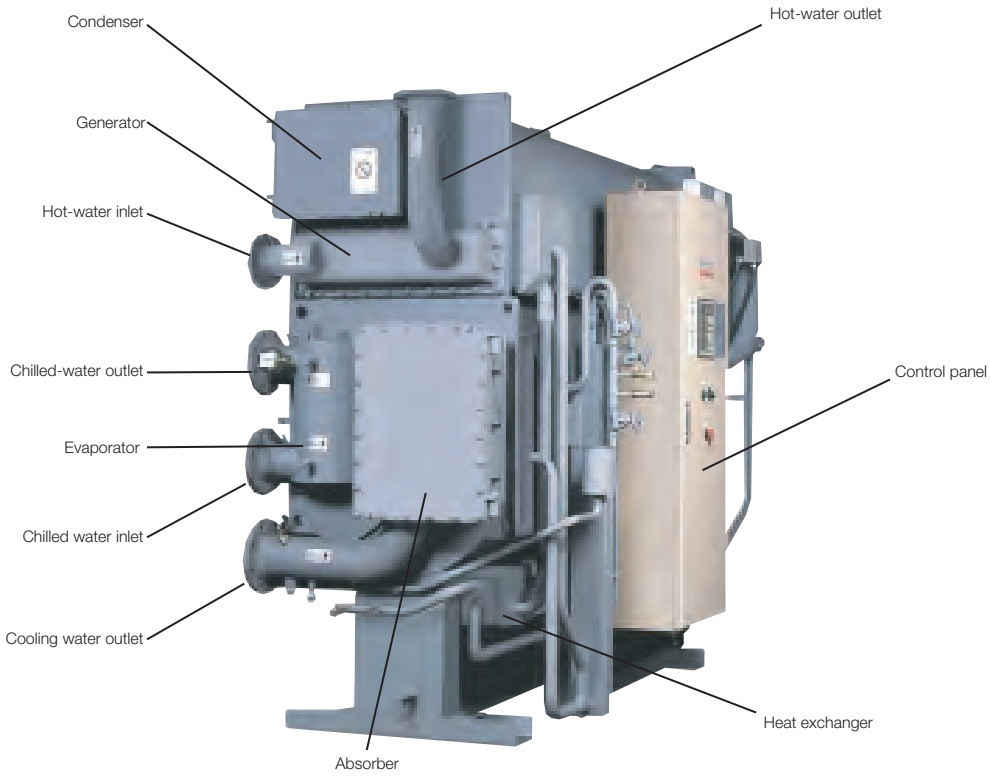

Features and advantages

Expert self-diagnosis function

The expert function is provided to monitor operating conditions, predict chiller information and maintain stable operation.

Predictive maintenance information

Graph 1 - Fouling of heat transfer tubes in cooling water system

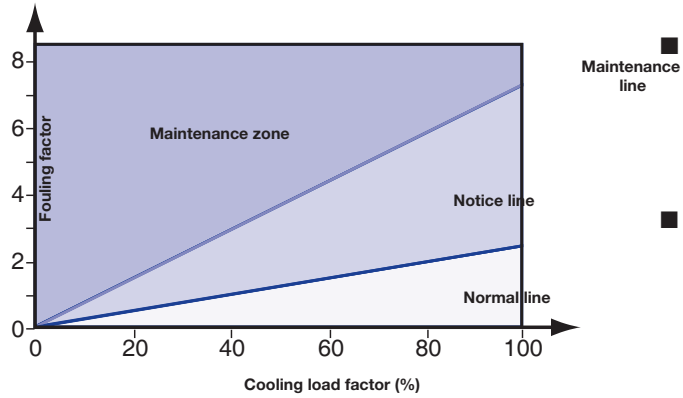

Graph 2 - Tend of absorbent concentration

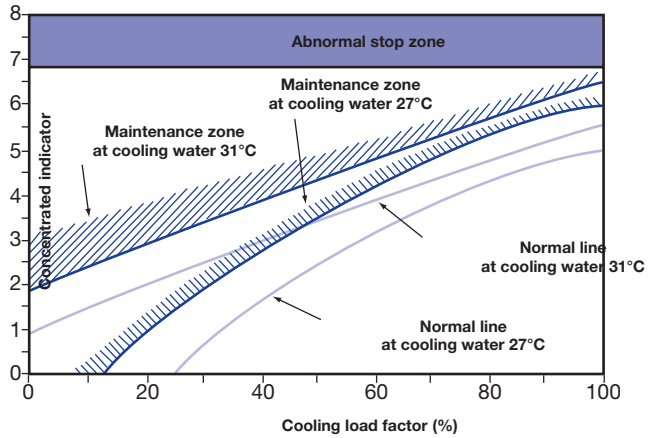

Graph 3 - Vacuum condition monitoring

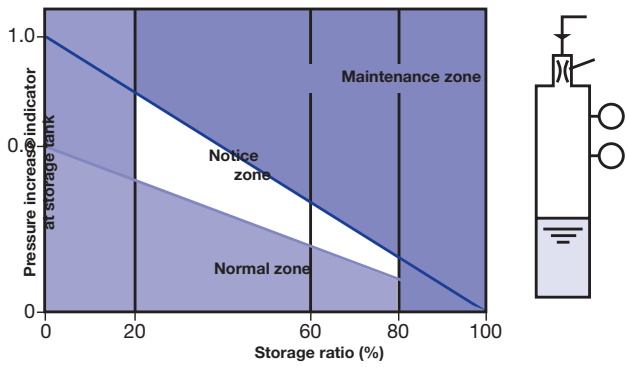

Legend

1. Storage tank
2. Diluted solution
3. Purge nozzle
4. Pd cell
5. Pressure sensor

Control system

- The Carrier control system surpasses other proportional only control systems available today. The digital PID (proportional plus integral plus derivative) control maximises unit performance by maintaining a ±0.5 K variance in leaving chilled-water temperature from the setpoint. Proportional controls can typically only maintain a ±1 K variance from the setpoint. The controller's innovative design also incorporates the ability to start and stop the system chilled/hot and cooling water pumps. During shutdown these pumps are sequenced to ensure a complete dilution cycle
- The leaving chilled-water temperature is measured every five seconds and steam input is changed according to the gradient of the leaving chilled-water temperature curve. System temperatures, setpoints, and operational records are displayed along with indicator lights for the chiller and pumps.
- The Carrier control system offers its users selfdiagnostics by constantly monitoring the chiller status and will automatically shut the chiller down if a fault occurs. The cause of shutdown will be retained in the memory and can be displayed for immediate operator review. The controller's memory will also retain and display the cause of the last three system fault conditions. This method of retaining fault conditions is extremely useful for maintaining an accurate record of unit performance and fault history.

Display and control board

Figure 2 - Indication lights

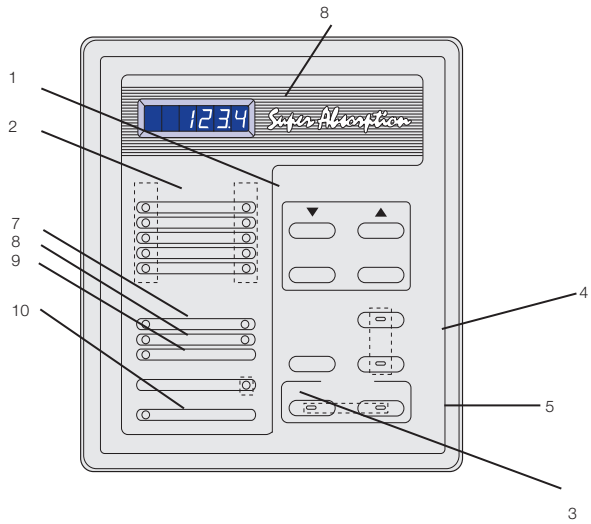

Legend

	Name	LED colour
1.	Operation indication light	Green
2.	Stop indication light	Orange
3.	Alarm indication light	Red
4.	Remote/local select button with LED	Green
5.	Operation select button with LED	Green
6.	Data display	7 segment LED (red)
7.	Stand-by indication light	Green
8.	Dilution indication light	Green
9.	Safety circuit indication light	Green
10.	Power indication light	orange
GL*.	Purge indication light	
43P*.	Purge pump on-off switch	
43ES*.	Emergency stop switch	

*On the control panel door, see p.16

Features and advantages

Fast digital PID control

The introduction of new digital PID control stabilises the chilled/hot water temperature with high accuracy. It quickly responds to the load fluctuation and supplies stable chilled/hot water temperature. It is suitable for air-conditioning intelligent buildings which require sophisticated control.

Saving energy with the inverter (option)

Balancing the load and flow rate with the absorbent pump's inverter control enables efficient and energy-saving operation. As a result, it reduces input energy and electric power consumption. Running cost is decreased by 5% compared to non-inverter control.

Graph 4 - Running cost curve

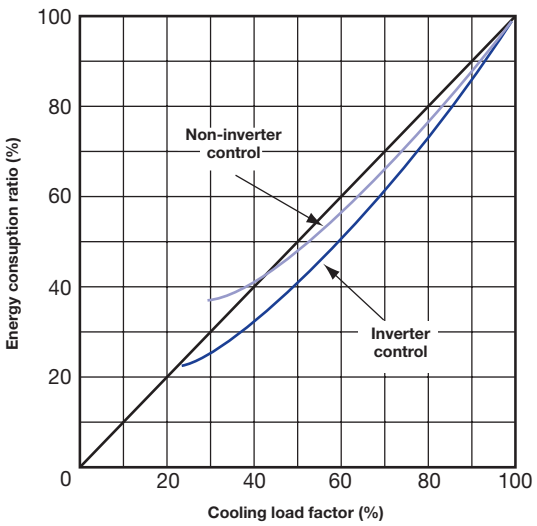

Notes

1. Chilled water leaving temperature 7°C constant
2. Cooling water entering temperature:

Load factor (%)	Temperature (°C)
100	32
50	27
30	25

Purge system

The high-performance purge system maintains the required operating pressure, preserves chiller performance characteristics, minimises chiller maintenance to one purge operation per season (for year-round operation).

Hot-water valve opening control

- At the start-up, the opening angle of the hot-water control valve is controlled in three stages, reducing the amount of hot water and the time needed to reach the desired level, compared with the previous model.
- Adjusting the opening speed of the hot-water control valve at the second and third stage, it is possible to set up the most suitable conditions for the site auxiliary equipment.

Graph 5 - Hot water valve opening control

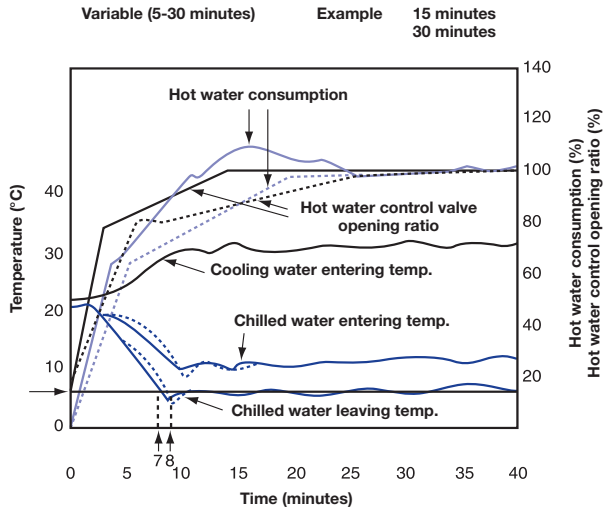

Expansion of safe operating zone

- This ensures quick response to rapid changes and maintains stable operation.
- The safe operating zone is between 19 °C and 34 °C cooling water temperature (for a nominal cooling water entering temperature of 32 °C).

Graph 6 - Safe operating zone chart

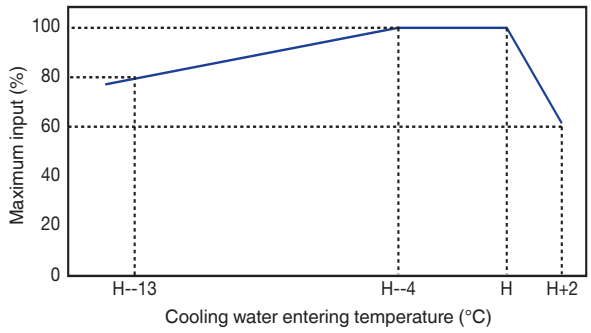

Crystallisation protection

A microprocessor monitors the absorbent concentration. Steam supply is stopped, and the unit is returned to normal operation, when the concentration is over a certain limit, to prevent the crystallisation of absorbent

Scope of order LJ size 01-02-03

Item	Standard	Option
Chilled water		
Temperature	Entering: 12.2 °C, leaving: 5 °C through 12 °C Leaving: 6.7 °C, temperature difference 3 K through 10 K	
Flow rate	0.043 l/s x kW - Temperature difference (min. 50%)	
Max. working pressure	Sizes 01/02/03 784 kPa.	1034 kPa, 1540 kPa and 2068 kPa
Hydraulic test pressure	Max.working pressure x 1.5	Max working pressure x 1.5
Fouling factor	0.018 m^2 K/kW Max. 0.18 m^2 K/kW	
Tube material	Copper tube	Cu Ni tube
Water quality	Refer to JRA-GL02E-1994	No option
Structure of water header	Removable type and epoxy treated	No option
Manufacturing standard of water header	Flanges ANSI (except sizes 01/02/03: Flanges DIN)	No option
Cooling water		
Temperature	Entering: 29.4 °C, entering: 20 °C through 40 °C Leaving: 38.4 °C	
Flow rate	0.065 l/s x kW, within water flow rate range of each model	
Max. working pressure	Sizes 01/02/03 784 kPa.	1034 kPa, 1540 kPa and 2068 kPa
Hydraulic test pressure	Max. working pressure x 1.5	
Fouling factor	0.044 m^2 K/kW	Max. 0.18 m^2 K/kW
Tube material	Copper tube	Cu Ni tube
Water quality	Refer to JRA-GL02E-1994	No option
Structure of water header	Hinged type and epoxy treated	No option
Manufacturing standard of water header	Flanges ANSI	No option
Hot water		
Temperature	Entering: 95.0 °C, entering: 80 °C through 110 °C Leaving: 86.0 °C, leaving: min. 75 °C	
Flow rate	0.039 l/s x kW, within water flow rate range of each model	
Max. working pressure	Sizes 01/02/03 784 kPa.	Sizes 01/02/03 784 kPa.
Hydraulic test pressure	Max. working pressure x 1.5	No option
Fouling factor	0.018 m^2 K/kW	No option
Tube material	Copper tube	No option
Water quality	Refer to JRA-GL02E-1994	No option
Structure of water header	Removable type	No option
Manufacturing standard of water header	Flanged ANSI	
Electricity		
Power supply	400 V - 3 phase - 50Hz (Voltage control within ±10%, frequency control within ±5%)	No option

Scope of order LJ size 01-02-03

Item	Standard	Option
Shipment	One section	No option
Control		
Safety functions	Refrigerant temperature Chilled water freeze protection Chilled water flow switch Cooling water temperature Generator temperature Crystallisation protection Motor protection	Cooling water flow switch
Capacity control	Digital PID control by chilled-water temperature	No option
Parts	Selected by Carrier	No option
Control panel		
Paint finish	Munsell 5Y-7/1	No option
Indication lights	Operation Stop Alarm	No option No option No option
Display	LED	No option
External terminals (volt-free normally open contact)	Operation indication Stop indication Alarm indication Feedback indication Cooling mode indication	No option
Structure Parts	Indoor type Selected by Carrier	No option No option
Electrical wiring and piping		
	Wire: 600 V polyvinyl grade chloride-insulated wires Pipe: Plicatube (flexible metal conduits)	No option No option
Insulation condition		
Place Ambient temperature Ambient humidity	Indoor- 5 °C through 40 °C Relative humidity: Max. 90 % at 45 °C	No option No option No option
Atmosphere	Be sure the following are not present - Corrosive gas - Explosive gas - Poisonous gas	No option
Factory test		
	Vacuum-side leak test Electric insulation resistance test Dielectric breakdown test Function test of electric circuit	Performance test at full load

Scope of order LJ-A size 11-82

Item	Standard	Option
Standard	CE marking	No option
Chilled water		
Temperature	Inlet : 12°C Outlet : 7°C	Outlet : 5°C thru 12°C Temperature difference 3°C thru 10°C
Flow rate	0.605m3/h RT	Changes depending on chilled water temperature difference (min. 50%)
Max. working pressure	1 Mpa	Max. 2 MPa
Hydraulic test pressure	Max. working press. x1.5	No option
Fouling factor	0.018m2°C/kW	Max. 0.18m2°C/kW
Material of tube	Copper tube	Contact to Panasonic
Water quality	Refer to JRA-GL02E-1994	No option
Structure of water header	Removal type	Marine type
Manufacturing standard of water header	Manufacture standard	No option
Cooling water		
Temperature	Inlet : 29.4°C Outlet : 36.3°C”	Inlet : 20°C thru 40°C (There is a limit by the other conditions)
Flow rate	1.0m3/h RT	Within the water flow rate range of each model
Max. working pressure	1 Mpa	Max. 2 MPa
Hydraulic test pressure	Max. working press. x1.5	No option
Fouling factor	0.044m2°C/kW	Max. 0.18m2°C/kW
Tube material	Copper tube	Contact to Panasonic
Water quality	Refer to JRA-GL02E-1994	No option
Structure of water header	Marine type	No option
Manufacturing standard of water header	Manufacture standard	No option
Hot water		
Temperature	Inlet : 90°C Outlet : 80°C	Inlet : Max 110°C
Flow rate	0.112 l/sec RT (at 85°C r=0.968)	Within the water flow rate range of each model
Max. working pressure	1 Mpa	Max. 2 MPa
Hydraulic test pressure	Max. working press. x1.5	No option
Fouling factor	0.018m^2°C/kW	Max. 0.18m2°C/kW
Tube material	Copper tube	Contact to Panasonic
Water quality	Refer to JRA-GL02E-1994	No option
Structure of water header	Removal type	No option
Manufacturing standard of water header	Manufacture standard	No option
Electricity		
Phase Voltage Frequency	3phase 400V 50Hz (Voltage regulation : within ±10%) (Frequency regulation : within ±5%)	No option

Scope of order LJ-A size 11-82

Item	Standard	Option
Shipment	One section	Two sections
Control		
Safety functions	Chilled water freeze protection Chilled water flow switch Cooling water temperature Generator temperature Generator pressure Crystallization protection Motor protection	Cooling water flow switch
Capacity control	Digital PID control by CHW temp Remote control of CHW by 4-20mA	No option
Parts	Selected by Panasonic	
Control panel		
Painting	Munssel 5Y-7/1	No option
Indication lamps	Operation : Green Stop: Orange Alarm : Red	No option
Display	LED	No option
External terminals (No-voltage normal open contact)	Operation indication Stop indication Alarm indication Answer back indication Cooling mode indication Purge alarm indication	No option
Structure	Indoor type	No option
Parts	Selected by Panasonic	No option
Electrical wiring and piping	Wire : 600V grade polyvinyl chloride-insulated wires	No option
	Pipe : plica tube (flexible metal conduits)	No option
Insulation condition		
Place	Indoor	No option
Ambient temperature	5 °C thru 40 °C	No option
Ambient humidity	Relative humidity: Max. 90 % at 45 °C	No option
Atmosphere	Be sure the following are not present *Corrosive gas *Explosive gas *Poisonous gas	No option
Factory test	Leak test of vacuum side Electric insulation resistance test Dielectric breakdown test Function test of electric circuit	Performance test at full load

Dimensions/clearances

16LJ01

NOTE
(1) Dimensions (L), (W), (H), are for standard machine. The dimensions are changed by parts added.
(2) Indicates the position of anchor bolts.
(3) Clearance space must be saved either side of the chiller.
(4) Mating flange of all external water piping are provide welded ansi 150LB flange with chiller.
(5) Indicates the position of the power supply connection on control panel. (Dia. 35 mm).
(6) Installation clearance
. Longitudinal distance : 1000 mm
. Top : 200 mm
. Others : 500 mm

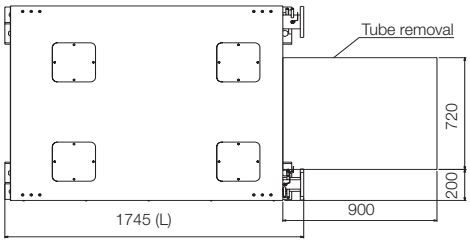

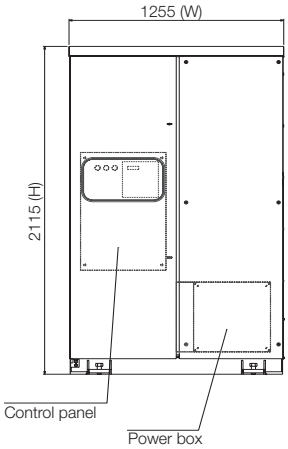

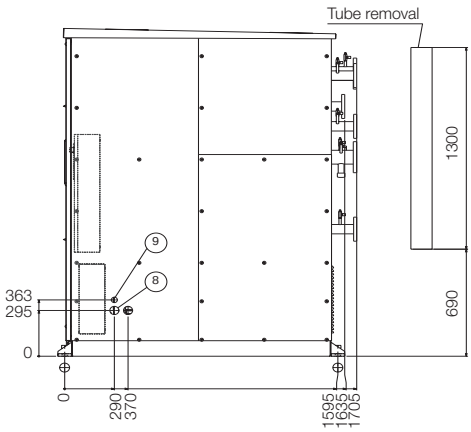

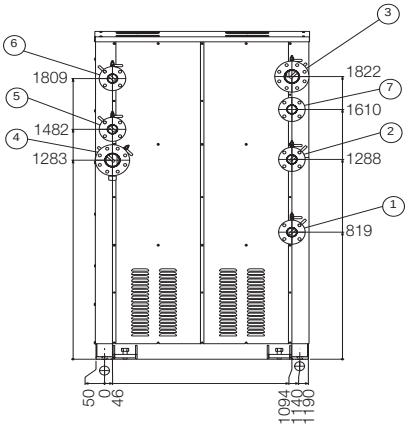

16LJ02

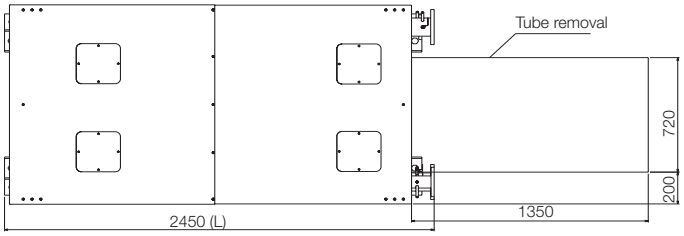

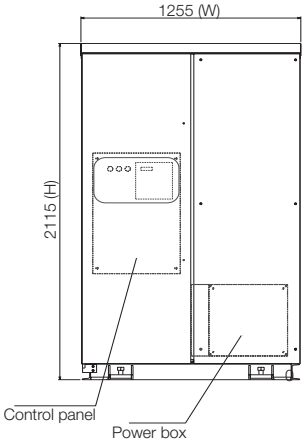

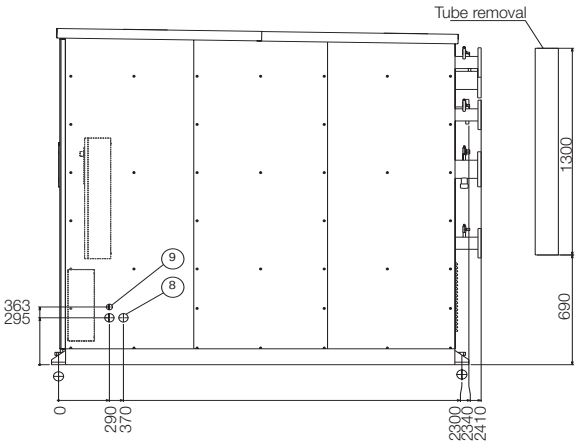

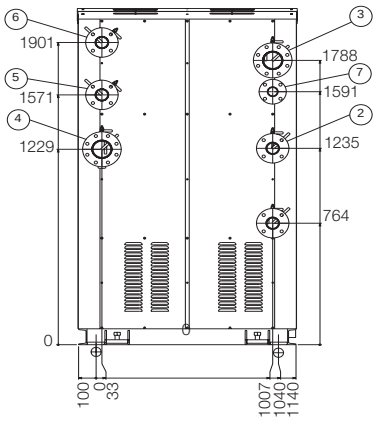

NOTE: Dimensions are for guidance only. Always refer to the certified drawings supplied upon request when designing an installation.

Dimensions/clearances

16LJ03

NOTE

(1) Dimensions (L), (W), (H), are for standard machine. The dimensions are changed by parts added.
(2) ◐ Indicates the position of anchor bolts.
(3) Clearance space must be saved either side of the chiller.
(4) Mating flange of all external water piping are provide welded ansi 150LB flange with chiller.
(5) ⬆ Indicates the position of the power supply connection on control panel. (Dia. 35 mm).
(6) Installation clearance
. Longitudinal distance : 1000 mm
. Top : 200 mm
. Others : 500 mm

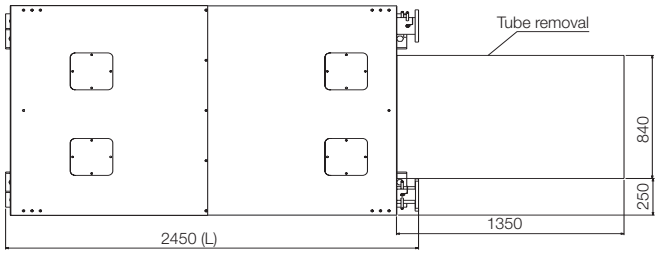

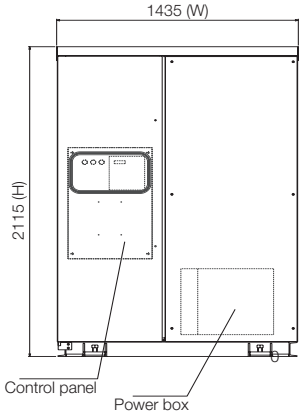

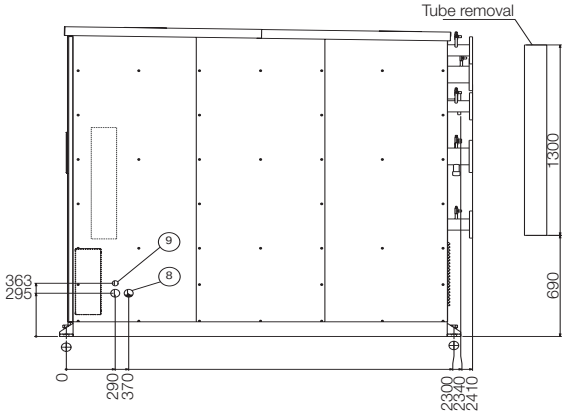

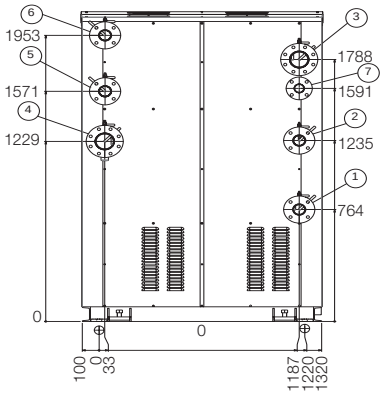

NOTE: Dimensions are for guidance only. Always refer to the certified drawings supplied upon request when designing an installation.

16LJ-A11 throught 16LJ-A12

NOTE
(1) Dimensions (L), (W), (H), are for standard machine.
The dimensions are changed by parts added.
(2) ⊕ Indicates the position of anchor bolts.
(3) Clearance space must be saved either side of the chiller.
(4) Connecting flange of all external water piping are DIN 10 flange.
(5) ⬆ Indicates the position of the power supply connection on control panel. (Dia. 35 mm).
(6) Installation clearance
. Longitudinal distance : 1000 mm
. Top : 200 mm
. Others : 500 mm

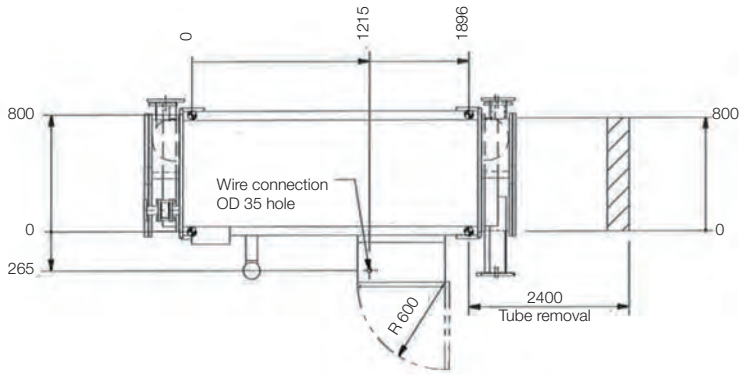

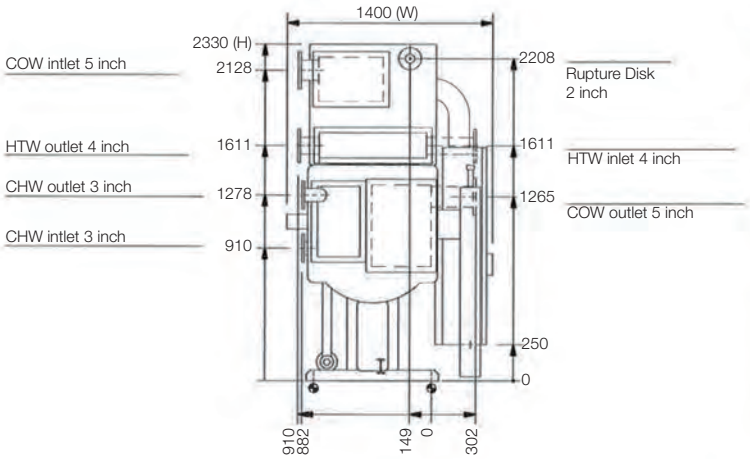

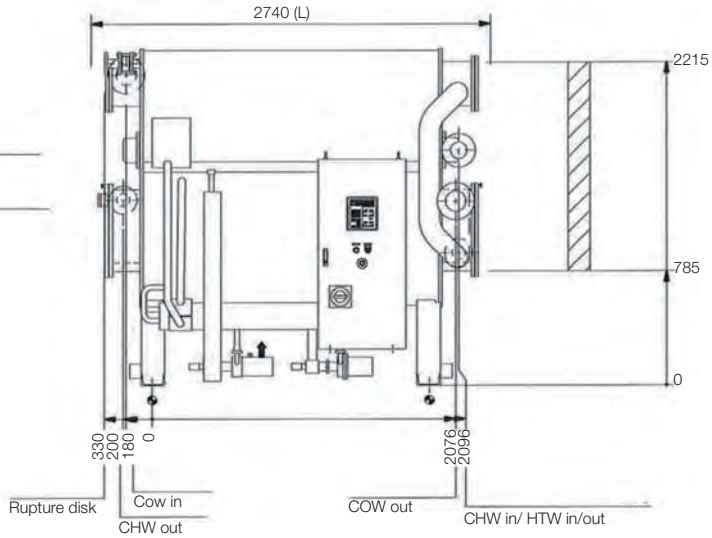

16LJ-A13 throught 16LJ-A14

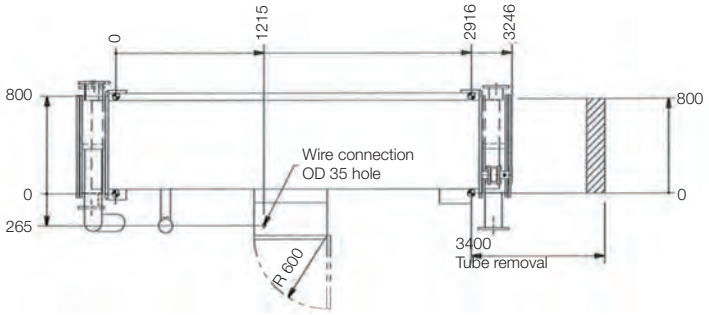

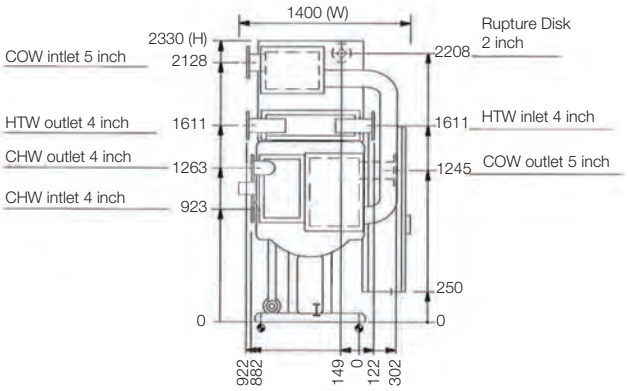

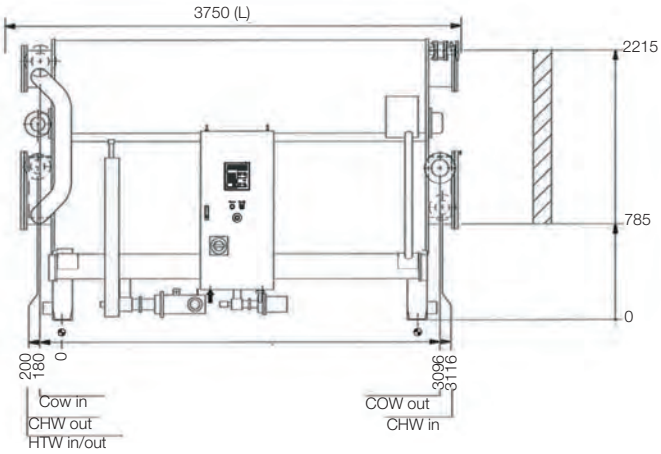

NOTE: Dimensions are for guidance only. Always refer to the certified drawings supplied upon request when designing an installation.

Dimensions/clearances

16LJ-A21 throught 16LJ-A22

NOTE

(1) Dimensions (L), (W), (H), are for standard machine.
The dimensions are changed by parts added.
(2) ⊕ Indicates the position of anchor bolts.
(3) Clearance space must be saved either side of the chiller.
(4) Connecting flange of all external water piping are DIN 10 flange.
(5) ⬆ Indicates the position of the power supply connection on control panel. (Dia. 35 mm).
(6) Installation clearance
. Longitudinal distance : 1000 mm
. Top : 200 mm
. Others : 500 mm

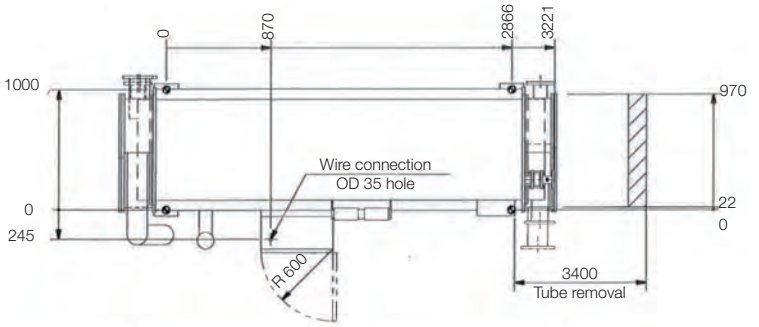

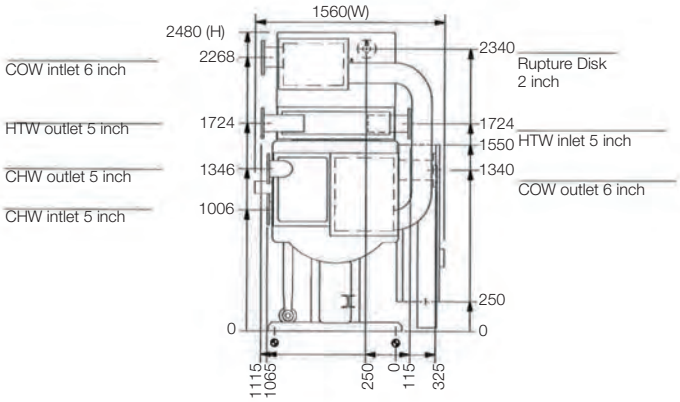

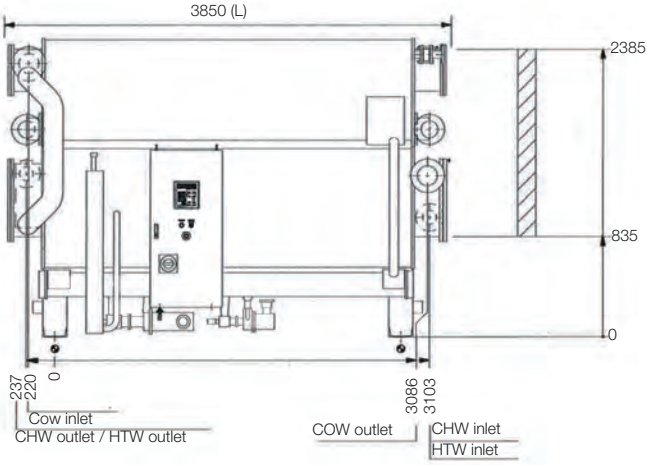

16LJ-A23 throught 16LJ-A24

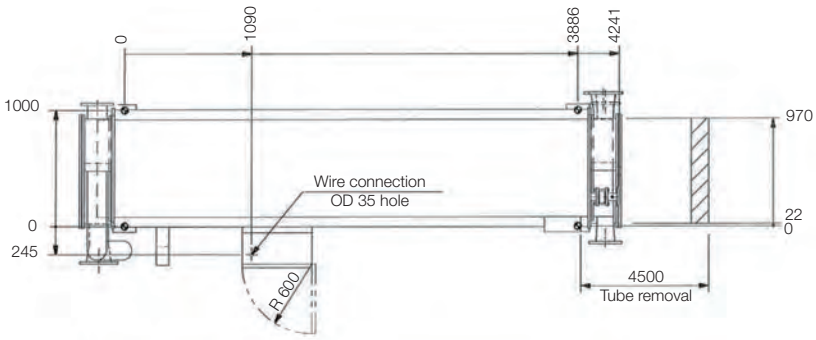

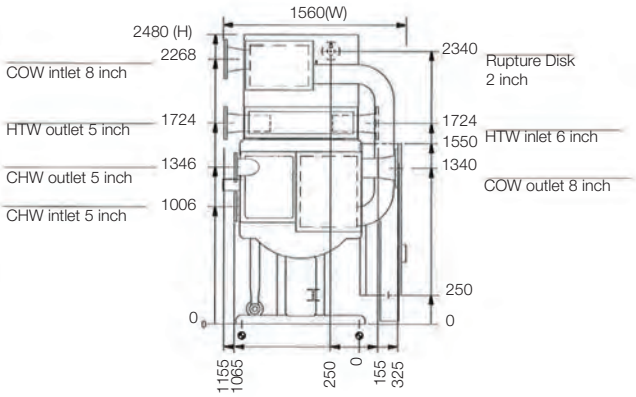

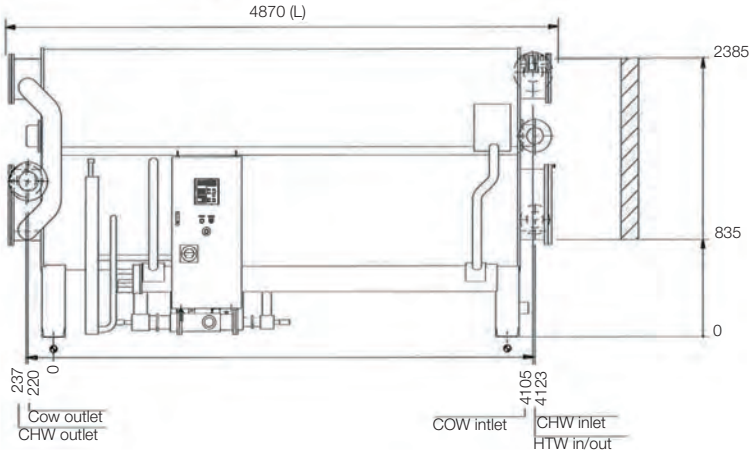

NOTE: Dimensions are for guidance only. Always refer to the certified drawings supplied upon request when designing an installation.

16LJ-A31 trought 16LJ-A32

NOTE
(1) Dimensions (L), (W), (H), are for standard machine.
The dimensions are changed by parts added.
(2) Indicates the position of anchor bolts.
(3) Clearance space must be saved either side of the chiller.
(4) Connecting flange of all external water piping are DIN 10 flange.
(5) Indicates the position of the power supply connection on control panel. (Dia. 35 mm).
(6) Installation clearance
. Longitudinal distance : 1000 mm
. Top : 200 mm
. Others : 500 mm

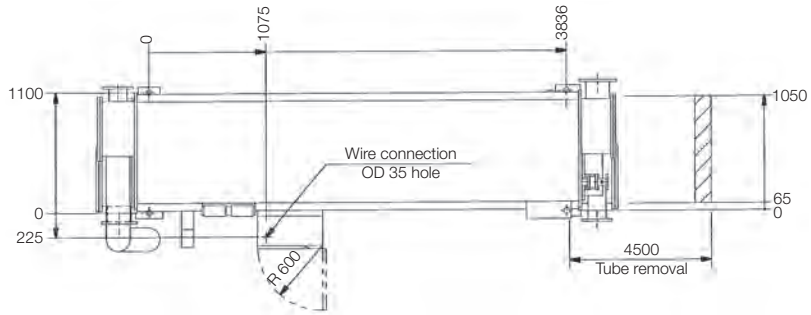

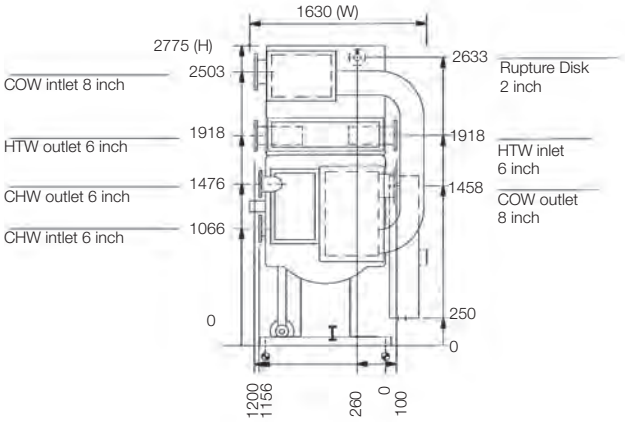

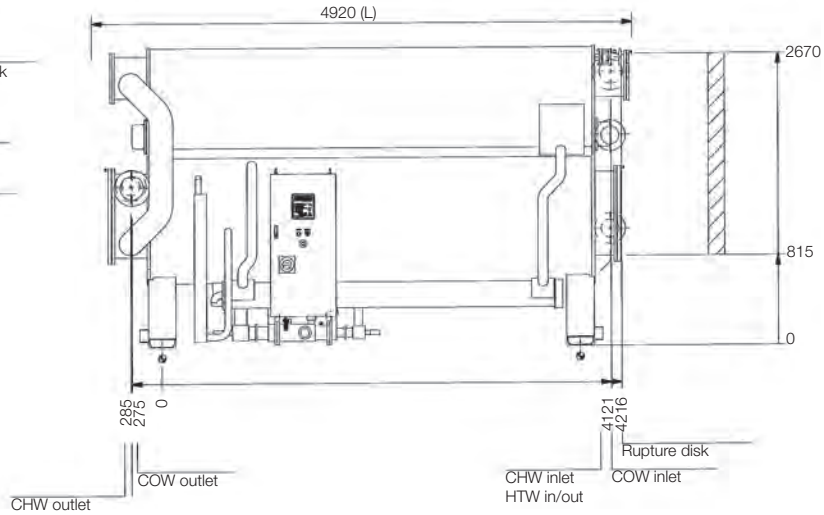

16LJ-A41 trought 16LJ-A42

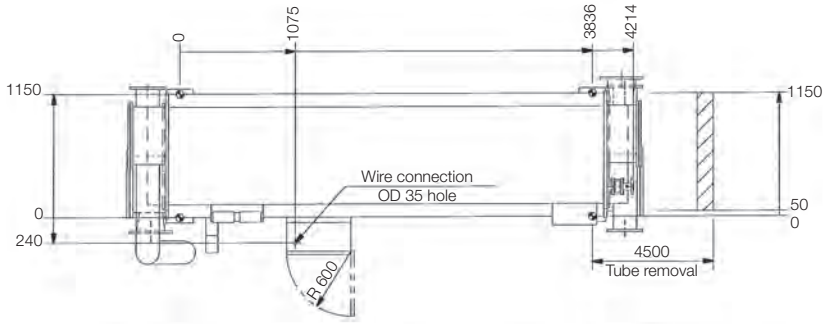

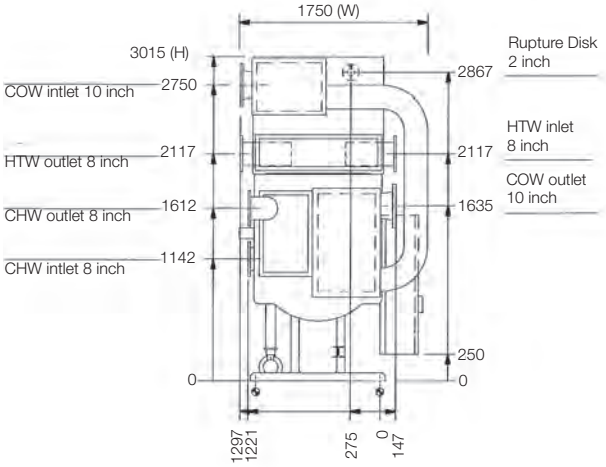

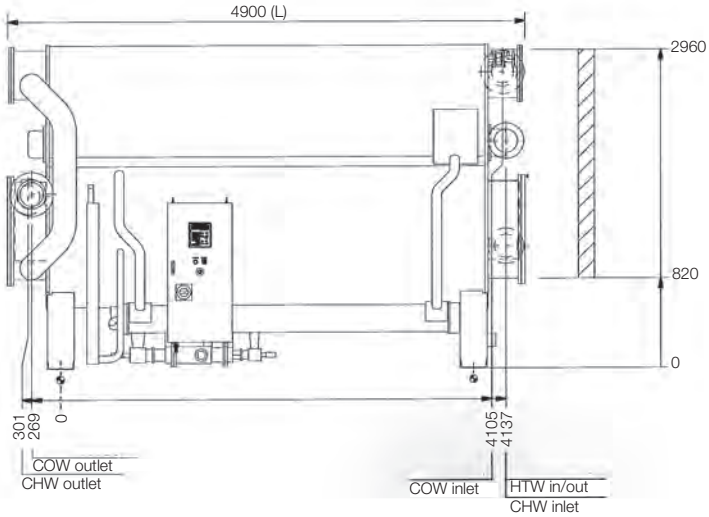

NOTE: Dimensions are for guidance only. Always refer to the certified drawings supplied upon request when designing an installation.

Dimensions/clearances

16LJ-A51

NOTE

(1) Dimensions (L), (W), (H), are for standard machine.
The dimensions are changed by parts added.
(2) Indicates the position of anchor bolts.
(3) Clearance space must be saved either side of the chiller.
(4) Connecting flange of all external water piping are DIN 10 flange.
(5) Indicates the position of the power supply connection on control panel. (Dia. 35 mm).
(6) Installation clearance
. Longitudinal distance : 1000 mm
. Top : 200 mm
. Others : 500 mm

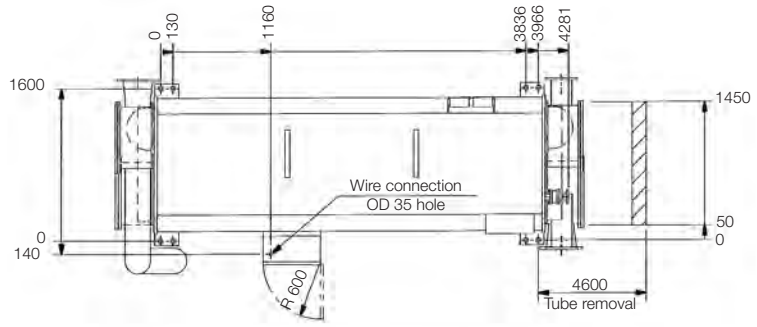

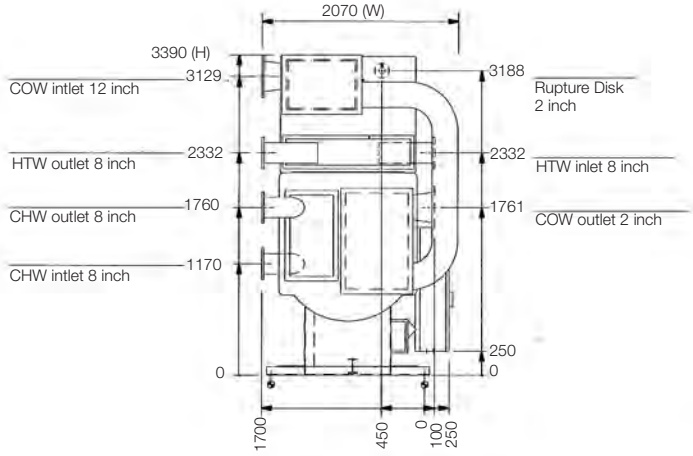

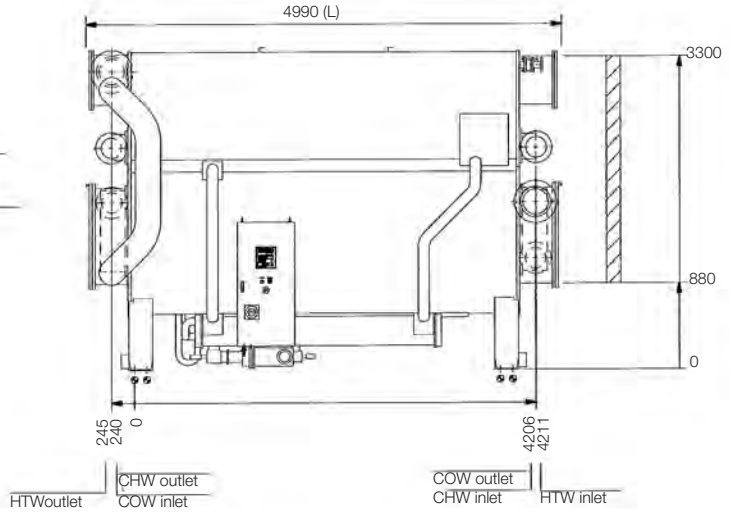

16LJ-A52

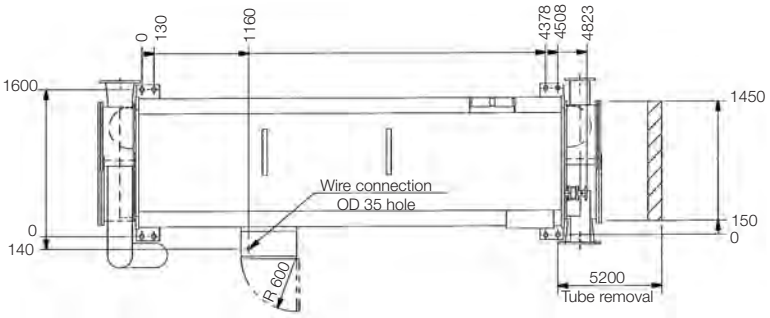

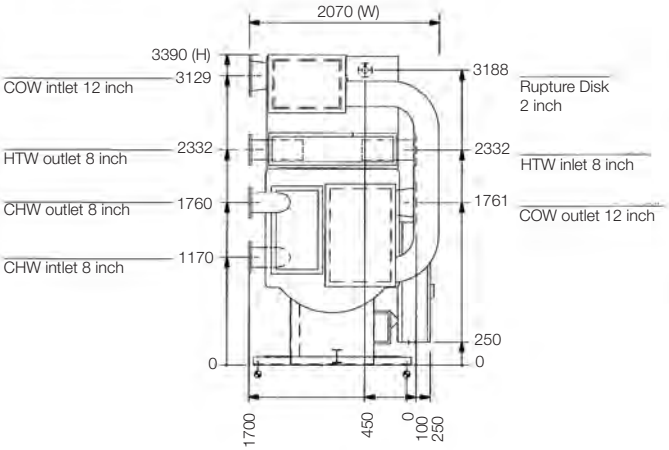

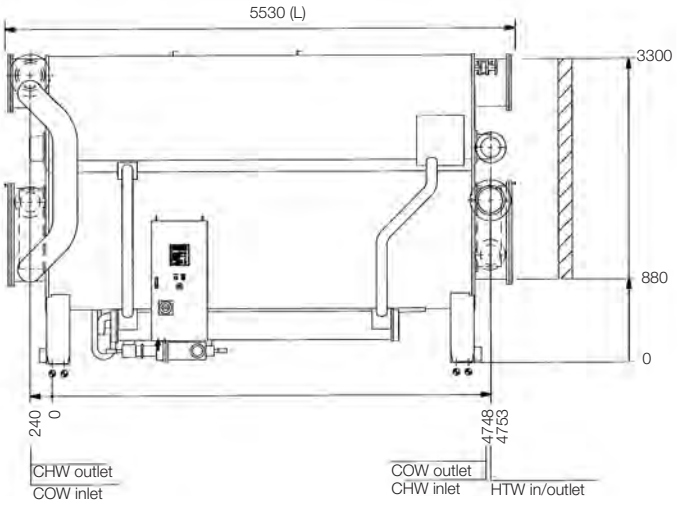

NOTE: Dimensions are for guidance only. Always refer to the certified drawings supplied upon request when designing an installation.

16LJ-A53

NOTE
(1) Dimensions (L), (W), (H), are for standard machine.
The dimensions are changed by parts added.
(2) Indicates the position of anchor bolts.
(3) Clearance space must be saved either side of the chiller.
(4) Connecting flange of all external water piping are DIN 10 flange.
(5) Indicates the position of the power supply connection on control panel. (Dia. 35 mm).
(6) Installation clearance
. Longitudinal distance : 1000 mm
. Top : 200 mm
. Others : 500 mm

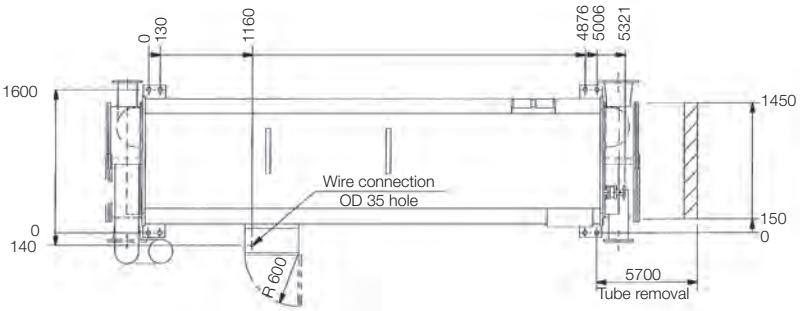

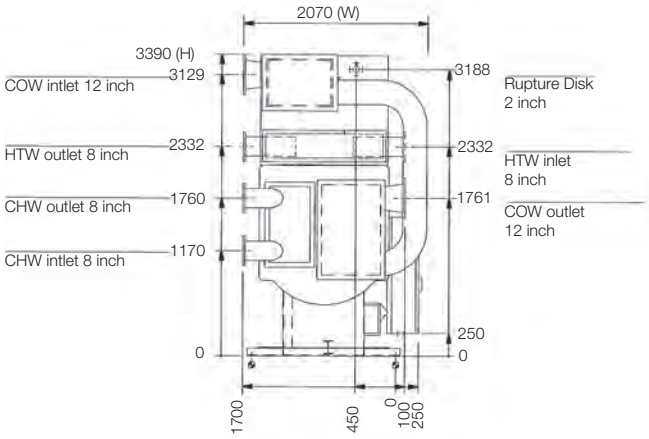

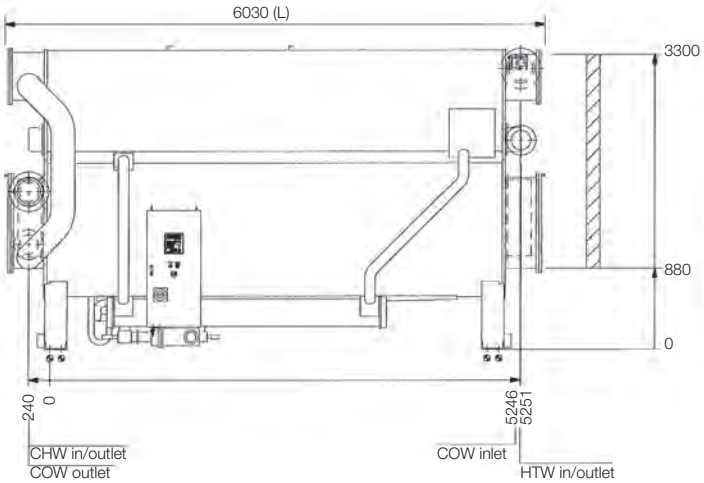

16LJ-A61

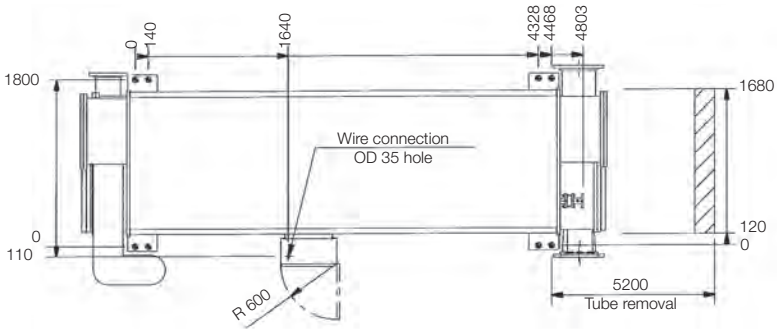

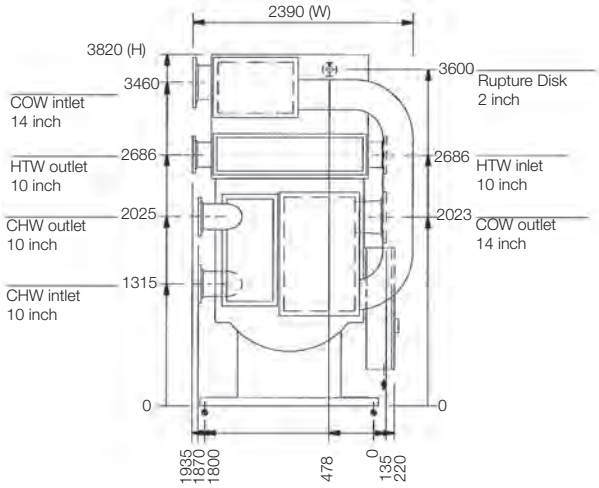

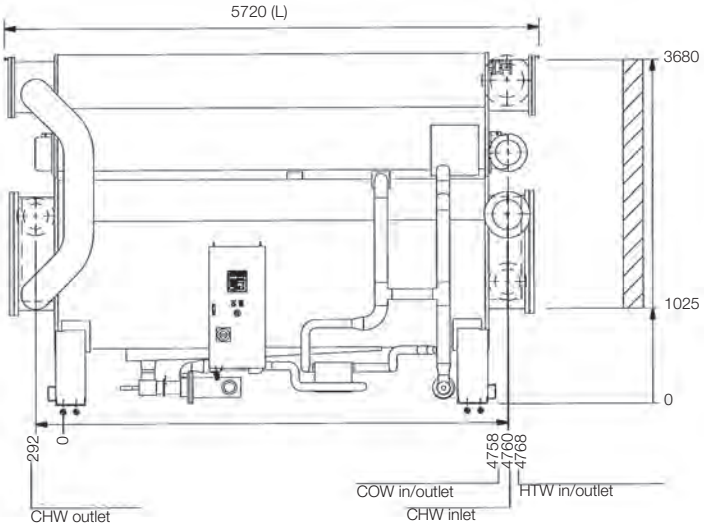

NOTE: Dimensions are for guidance only. Always refer to the certified drawings supplied upon request when designing an installation.

Dimensions/clearances

16LJ-A62

NOTE

(1) Dimensions (L), (W), (H), are for standard machine.
The dimensions are changed by parts added.
(2) ⊕ Indicates the position of anchor bolts.
(3) Clearance space must be saved either side of the chiller.
(4) Connecting flange of all external water piping are DIN 10 flange.
(5) ⬆ Indicates the position of the power supply connection on control panel. (Dia. 35 mm).
(6) Installation clearance
. Longitudinal distance : 1000 mm
. Top : 200 mm
. Others : 500 mm

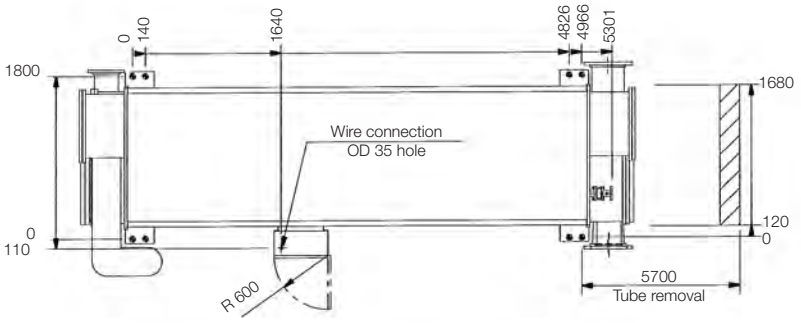

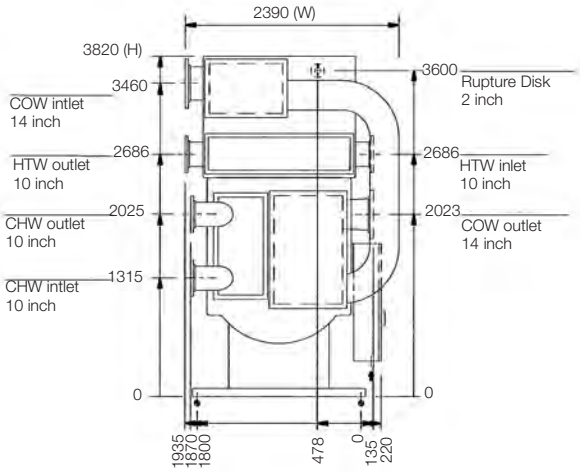

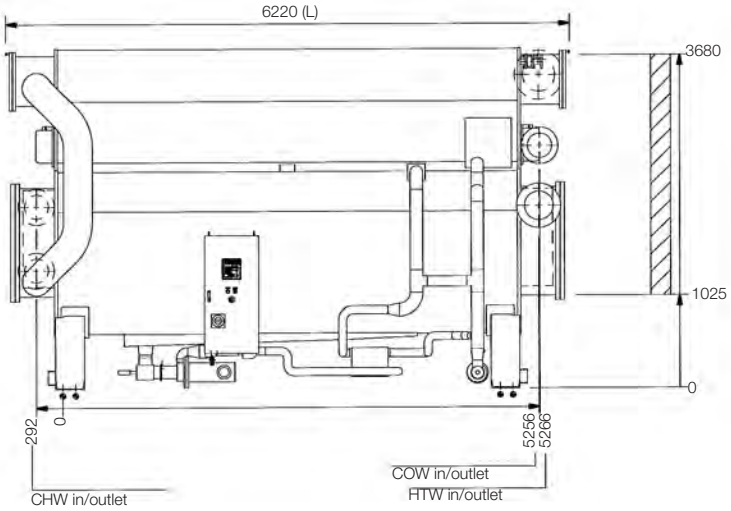

16LJ-A63

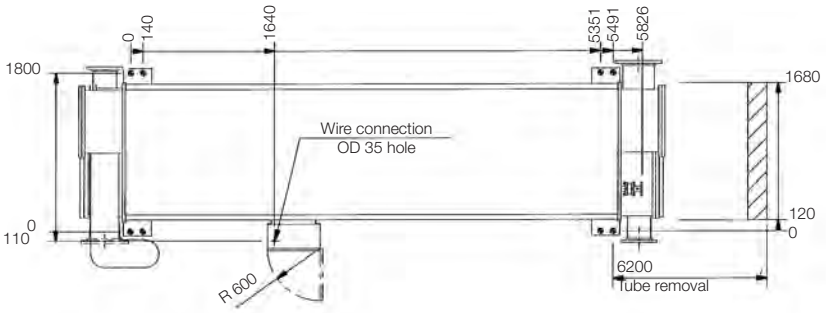

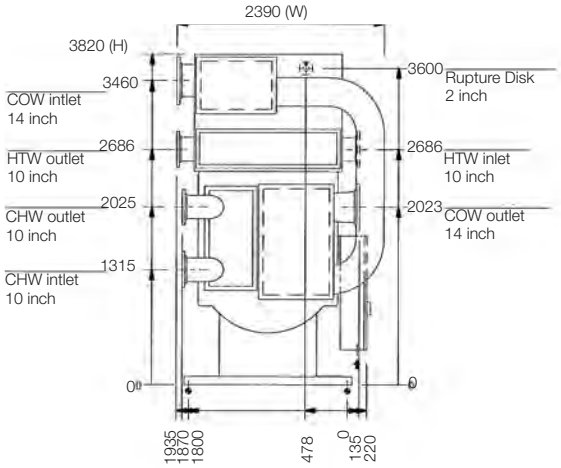

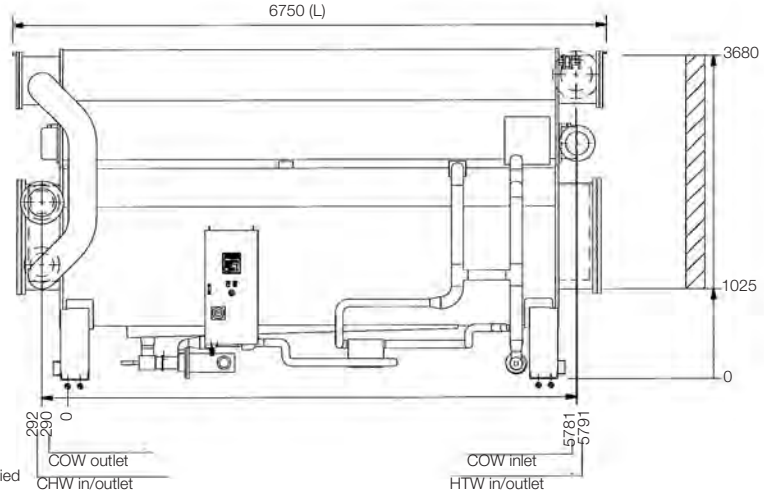

NOTE: Dimensions are for guidance only. Always refer to the certified drawings supplied upon request when designing an installation.

16LJ-A71

NOTE
(1) Dimensions (L), (W), (H), are for standard machine.
The dimensions are changed by parts added.
(2) ✪ Indicates the position of anchor bolts.
(3) Clearance space must be saved either side of the chiller.
(4) Connecting flange of all external water piping are DIN 10 flange.
(5) ⬆ Indicates the position of the power supply connection on control panel. (Dia. 35 mm).
(6) Installation clearance
. Longitudinal distance : 1000 mm
. Top : 200 mm
. Others : 500 mm

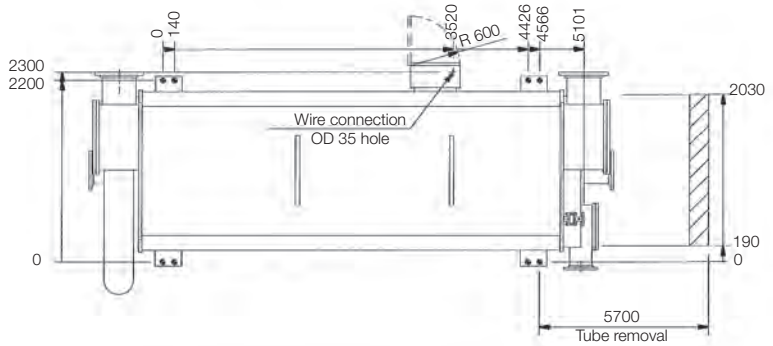

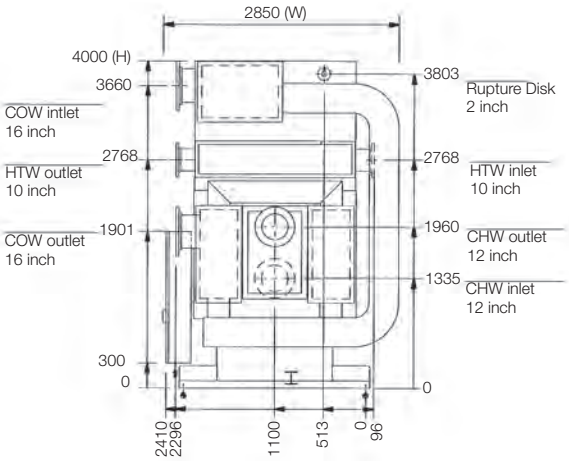

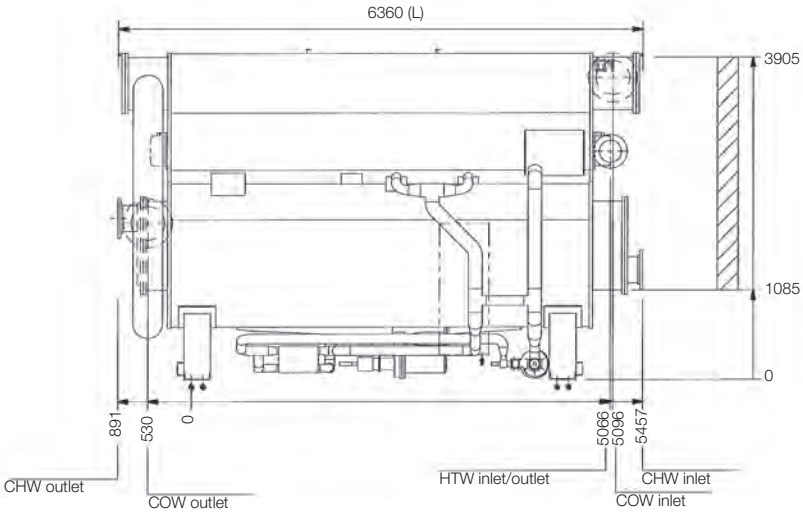

16LJ-A72

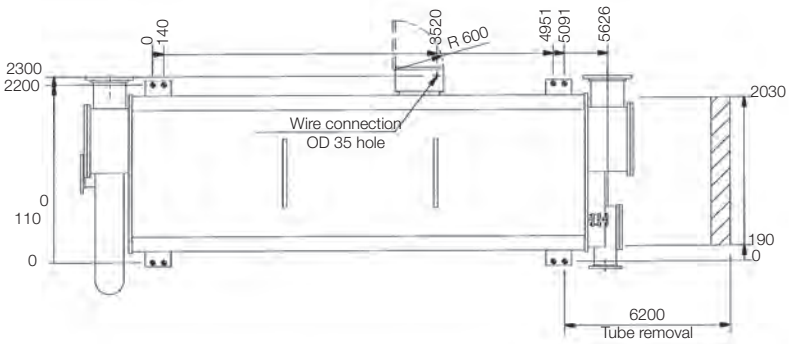

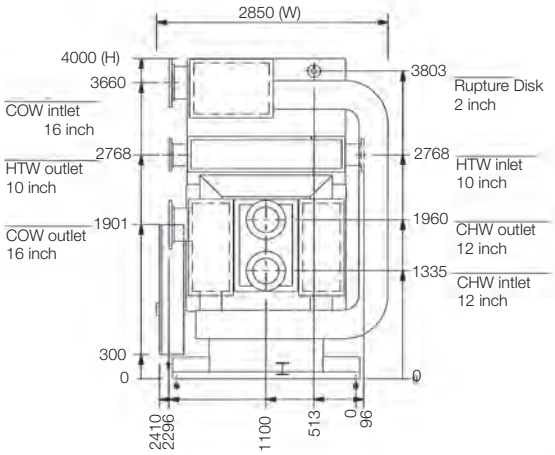

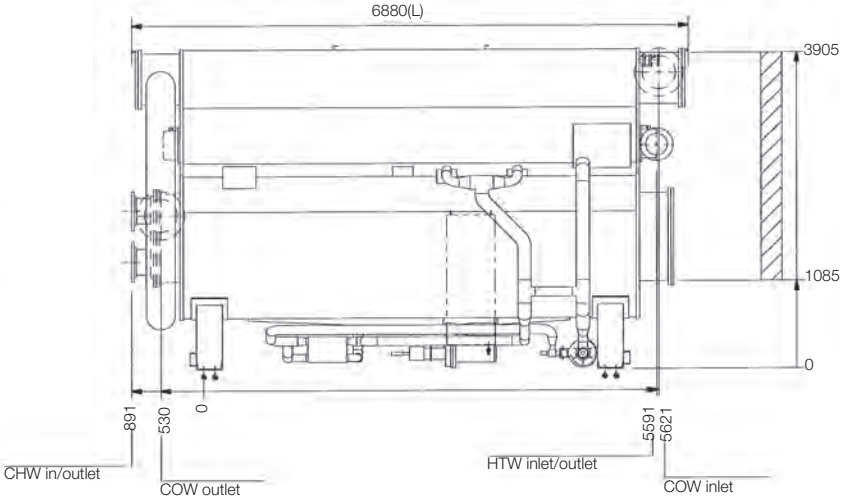

NOTE: Dimensions are for guidance only. Always refer to the certified drawings supplied upon request when designing an installation.

Dimensions/clearances

16LJ-A73

NOTE

(1) Dimensions (L), (W), (H), are for standard machine.
The dimensions are changed by parts added.
(2) ⊕ Indicates the position of anchor bolts.
(3) Clearance space must be saved either side of the chiller.
(4) Connecting flange of all external water piping are DIN 10 flange.
(5) ⬆ Indicates the position of the power supply connection on control panel. (Dia. 35 mm).
(6) Installation clearance
. Longitudinal distance : 1000 mm
. Top : 200 mm
. Others : 500 mm

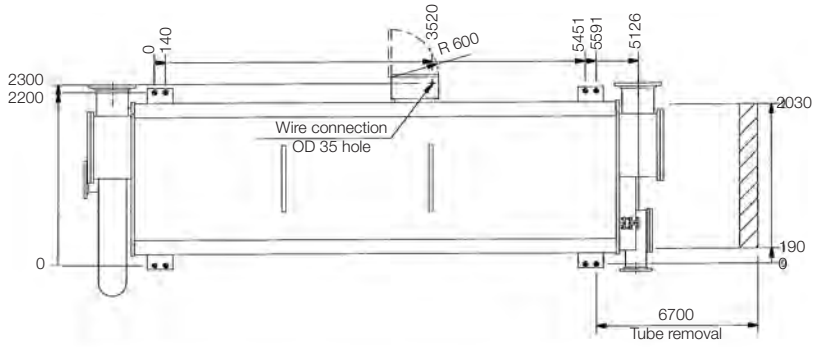

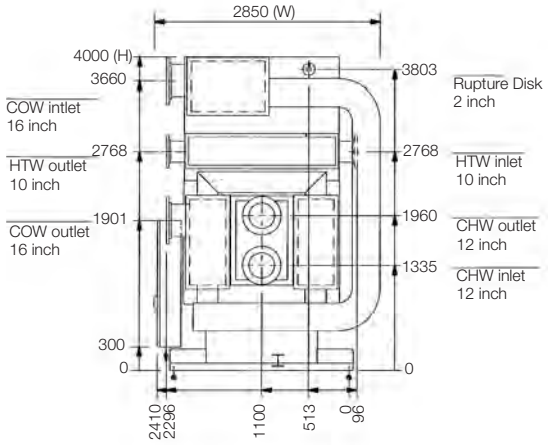

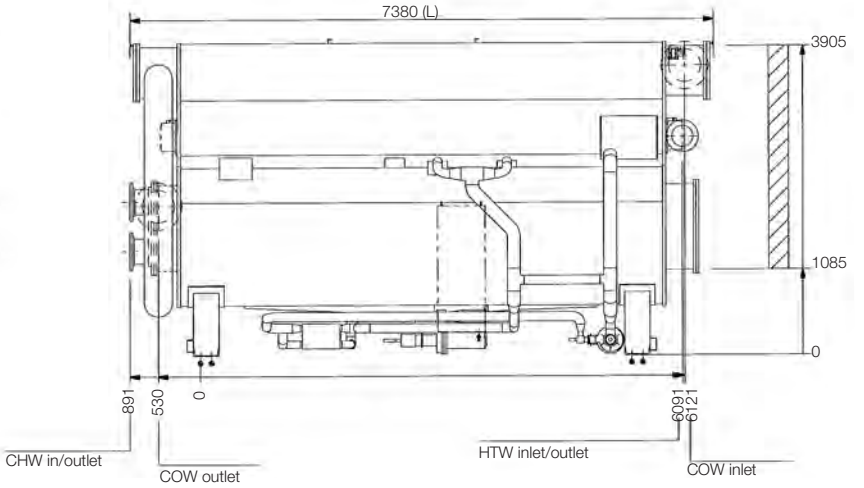

16LJ-A81

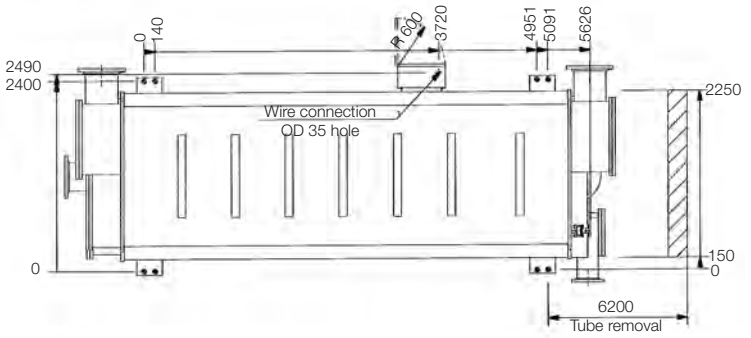

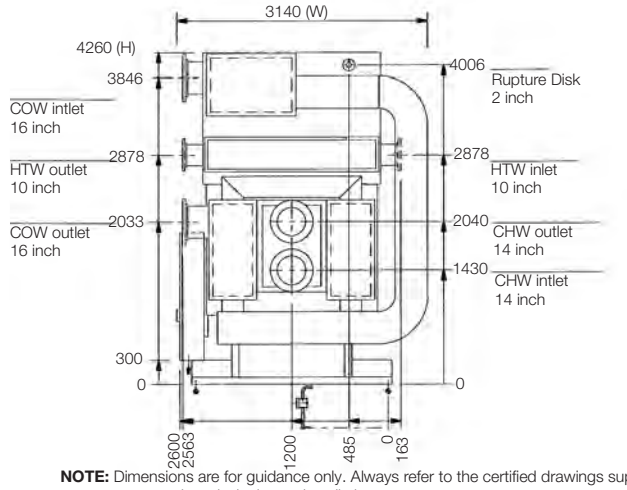

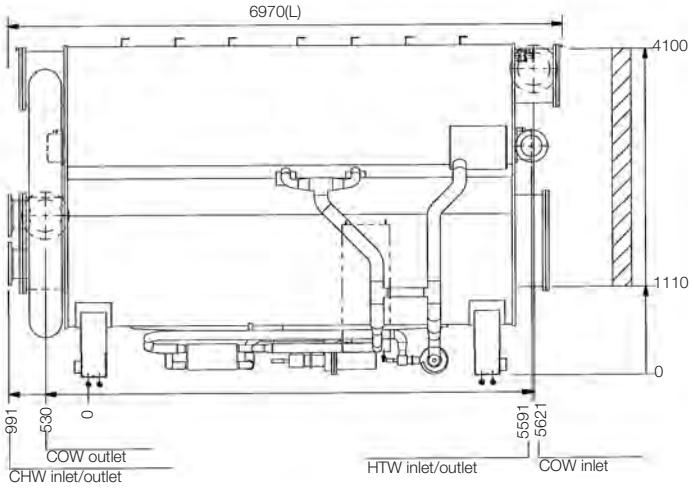

NOTE: Dimensions are for guidance only. Always refer to the certified drawings supplied upon request when designing an installation.

16LJ-A82

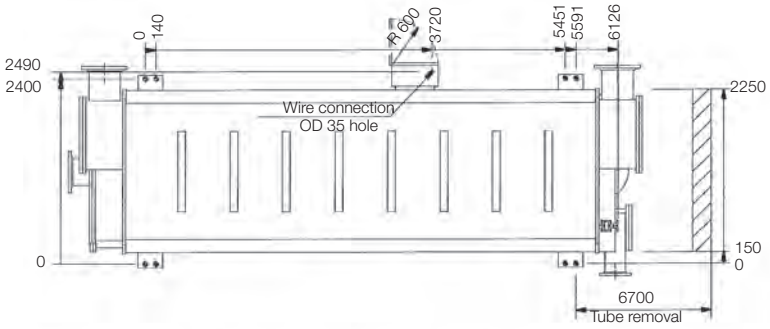

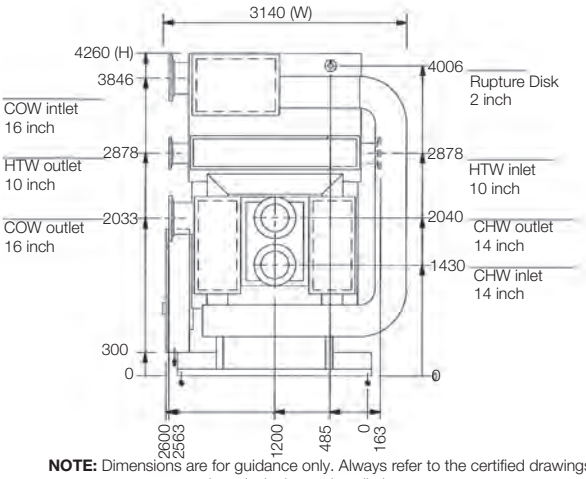

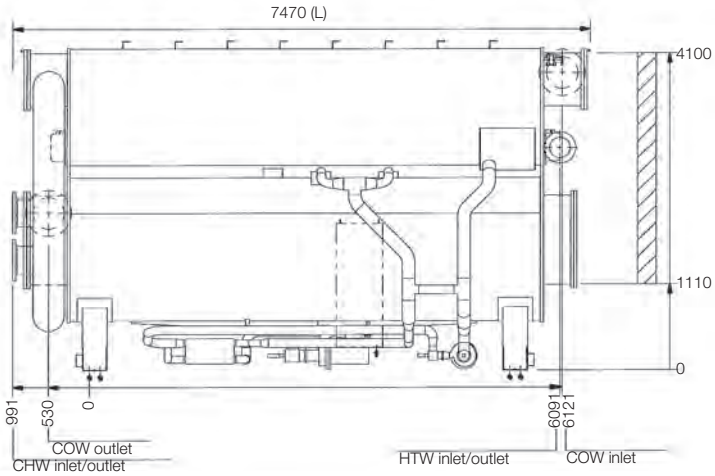

NOTE: Dimensions are for guidance only. Always refer to the certified drawings supplied upon request when designing an installation.

Foundation dimensions, mm

LJ01

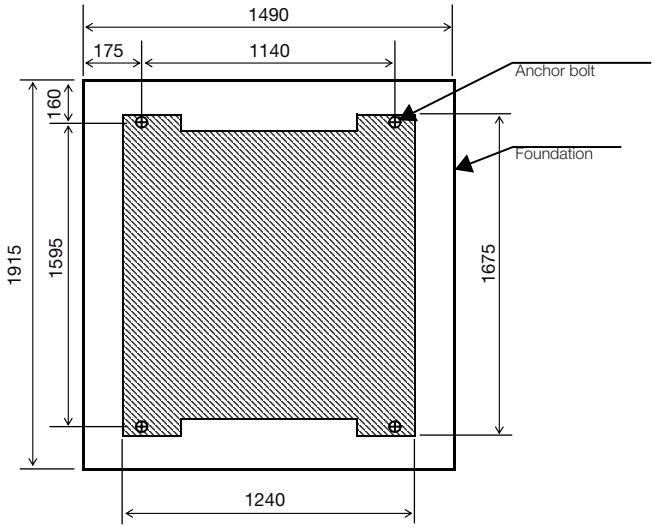

LJ02

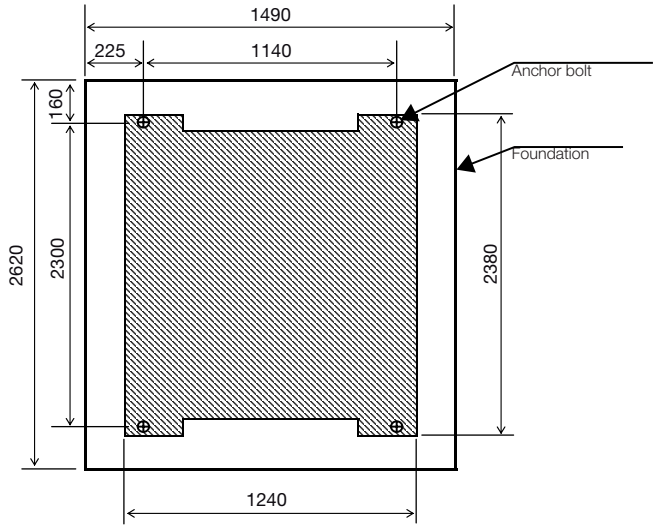

LJ03

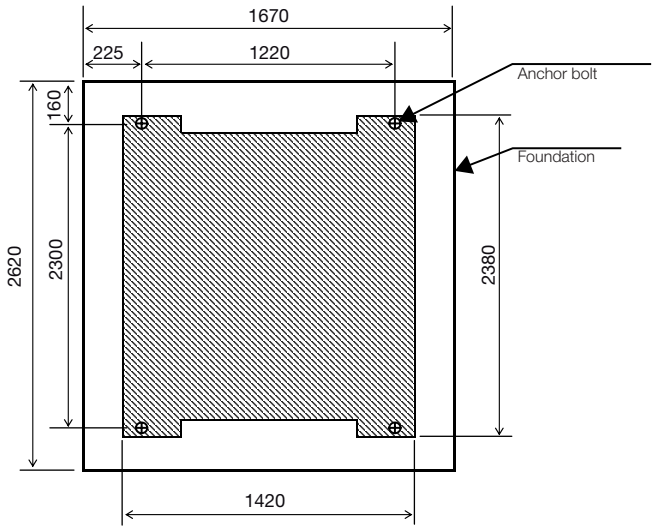

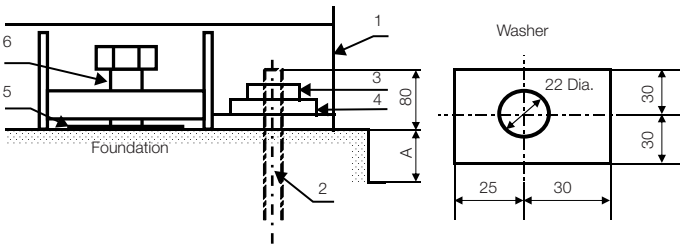

Legend :
1 : Base of the chiller
2 : Anchor bolt
3 : Nut
4 : Washer*
5 : Plate
6 : Bolt for level adjustment*
* : attatchment

A= 200mm or above

Material : Steel
Thickness : 9 mm

NOTES:
1. indicates the machine base.
   The machine base has a 30 mm diameter hole for the anchor bolt.
2. The anchor bolt should be fixed as shown in the detail drawing.
3. There should be a drain channel around the foundation.
4. The floor surface should be made waterproof to facilitate maintenance work.
5. The surface of the foundation should be made flat.
   (Leveling tolerance is 1 mm for 1000 mm)
6. Anchor bolts and nuts are to be supplied by the customer.

Foundation dimensions, mm

Figure 3 - LJ-A 11 to LJ-A 42

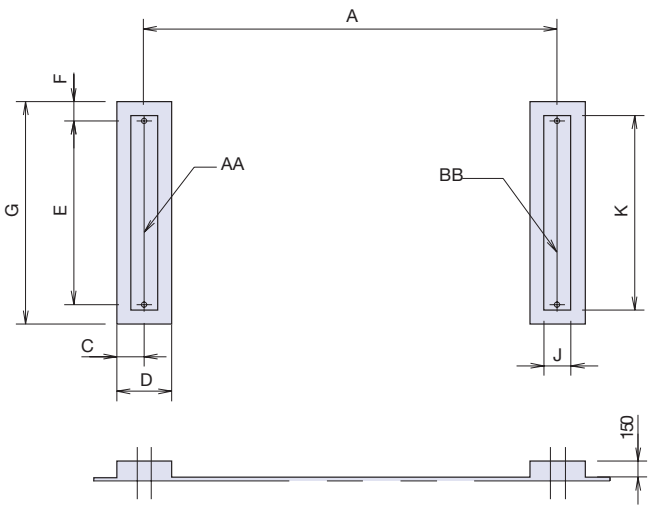

Figure 5 - LJ-A 51 to LJ-A82

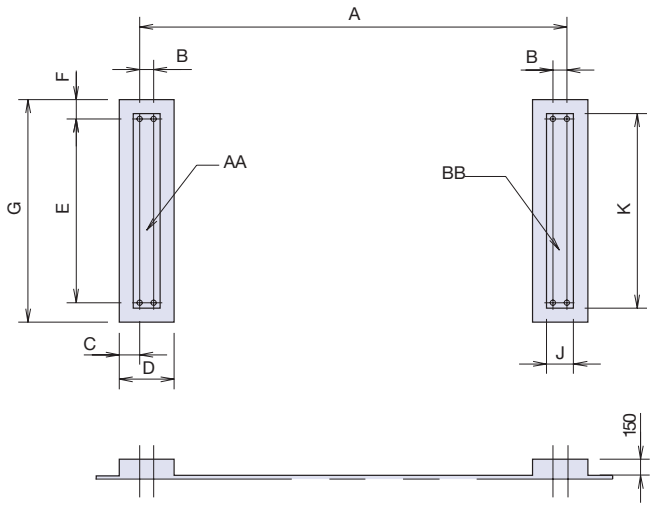

Figure 4 - Details of weld

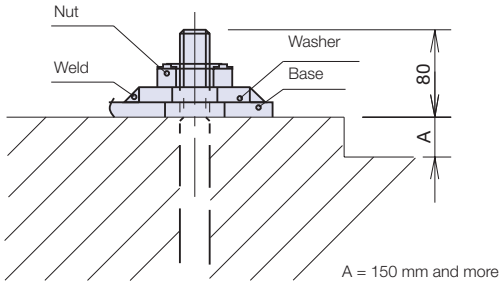

NOTES:
1. The machine base has ø50-mm hole for the anchor bolt.
2. The anchor bolt should be fixed as shown in the detail drawing.Washer should be welded to the base (see Fig. 4)
3. There should be a drain channel around the foundation.
4. The floor surface should be made waterproof to facilitate maintenance work.
5. The surface of the foundation should be made flat.(Leveling tolerance is 1 mm for 1000 mm)
6. Anchor bolts and nuts are to be supplied by customer.

Table 1 - Foundation dimmensions

		Weight			Dimmensions								
Model	**Size**	**AA+BB**	**AA**	**BB**	**A**	**B**	**C**	**D**	**E**	**F**	**G**	**J**	**K**
16LJ-A	11	4000	2000	2000	1896	-	175	360	800	150	1100	160	900
16LJ-A	12	4200	2100	2100	1896	-	175	360	800	150	1100	160	900
16LJ-A	13	5200	2600	2600	2916	-	175	360	800	150	1100	160	900
16LJ-A	14	5500	2750	2750	2916	-	175	360	800	150	1100	160	900
16LJ-A	21	6600	3300	3300	2866	-	200	400	1000	150	1300	200	1100
16LJ-A	22	6900	3450	3450	2866	-	200	400	1000	150	1300	200	1100
16LJ-A	23	8100	4050	4050	3886	-	200	400	1000	150	1300	200	1100
16LJ-A	24	8600	4300	4300	3886	-	200	400	1000	150	1300	200	1100
16LJ-A	31	10500	5250	5250	3836	-	225	450	1100	150	1400	250	1200
16LJ-A	32	11000	5500	5500	3836	-	225	450	1100	150	1400	250	1200
16LJ-A	41	13000	6500	6500	3836	-	225	450	1150	150	1450	250	1250
16LJ-A	42	13600	6800	6800	3836	-	225	450	1150	150	1450	250	1250
16LJ-A	51	18400	9200	9200	3966	130	190	510	1600	180	1960	250	1700
16LJ-A	52	20000	10000	10000	4508	130	190	510	1600	180	1960	250	1700
16LJ-A	53	21400	10700	10700	5006	130	190	510	1600	180	1960	250	1700
16LJ-A	61	28300	14150	14150	4468	140	220	580	1800	180	2160	320	1900
16LJ-A	62	30300	15150	15150	4966	140	220	580	1800	180	2160	320	1900
16LJ-A	63	32400	16200	16200	5491	140	220	580	1800	180	2160	320	1900
16LJ-A	71	38700	19350	19350	4566	140	220	580	2200	180	2560	320	2300
16LJ-A	72	41200	20600	20600	5091	140	220	580	2200	180	2560	320	2300
16LJ-A	73	43700	21850	21850	5591	140	220	580	2200	180	2560	320	2300
16LJ-A	81	46900	23450	23450	5091	140	220	580	2400	180	2760	320	2500
16LJ-A	82	49600	24800	24800	5591	140	220	580	2400	180	2760	320	2500

Control panel dimensions , mm

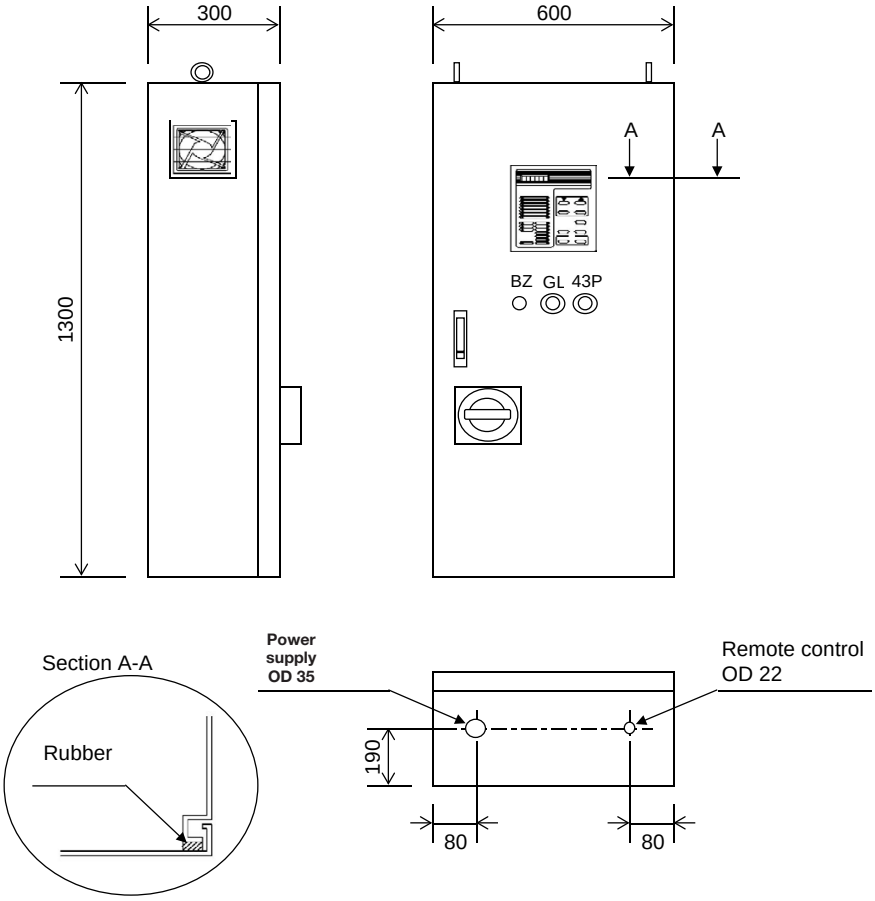

16TJ

Nominal cooling capacity 350-2500 kW

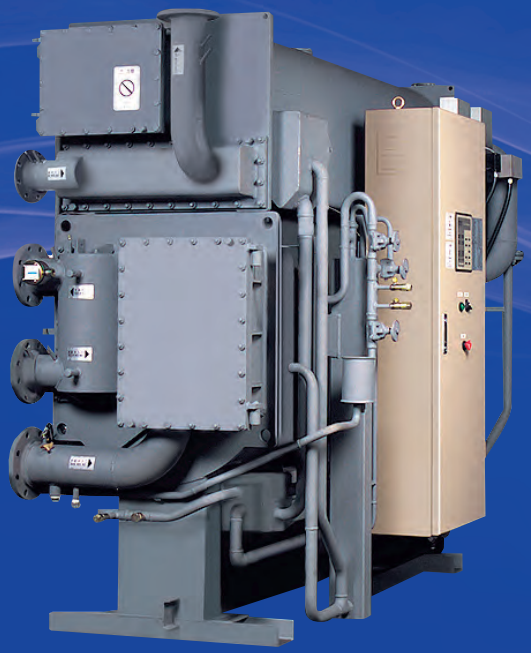

SUPER ABSORPTION

Complete range 350 to 2500 kW

HFC-refrigerant free

Steam supply pressure 50 to 100 kPa

The Carrier Corporation has more than 100 years experience in providing HVAC systems and equipment around the world and offers a complete product solutions for many different type of applications: From residential to industrial.

For all cases where power grid is not available on site or either not extensively developed, or where thermal energy sources (water or steam) are available on site, Carrier offers a complete range of absorption chillers.

Physical data

Single effect steam-fired absorption chillers

16TJ		11	12	13	14	21	22	23	24
Cooling capacity	kW	352	422	527	633	738	844	985	1125
Chilled water system*									
Flow rate	l/s	15.1	18.2	22.7	27.3	31.7	36.4	42.5	48.3
Pressure drops	kPa	50	51	64	67	60	64	42	45
Connection (ANSI)	in	4	4	4	4	5	5	6	6
Retention volume	m^3	0.12	0.13	0.15	0.17	0.22	0.25	0.29	0.31
Cooling water system*									
Flow rate	l/s	22.7	27.3	34.2	40.8	47.8	54.4	63.6	72.8
Pressure drops	kPa	34	37	32	36	32	35	65	70
Connection (ANSI)	in	5	5	5	5	6	6	8	8
Retention volume	m^3	0.33	0.37	0.41	0.45	0.58	0.63	0.69	0.76
Steam system									
Consumption	kg/h	780	940	1170	1410	1640	1880	2190	2500
Steam inlet (ANSI)	in	5	5	5	5	6	6	8	8
Drain outlet (ANSI)	in	1-1/2	1-1/2	1-1/2	1-1/2	1-1/2	1-1/2	1-1/2	1-1/2
Control valve	in	2	2	2-1/2	2-1/2	2-1/2	3	3	4
Shutoff valve	in	2	2	2-1/2	2-1/2	2-1/2	3	3	4
Dimensions									
Length	mm	2690	2690	3690	3690	3790	3790	4850	4850
Height	mm	2200	2200	2200	2200	2350	2350	2370	2370
Width	mm	1400	1400	1400	1400	1560	1560	1560	1560
Tube removal space	mm	2400	2400	3400	3400	3400	3400	4500	4500
Weight									
Operating weight	kg	4000	4300	5100	5400	6700	6900	7900	8300
Max shipping weight**	kg	3500	3700	4500	4700	5800	6000	6900	7200
Power supply	V-ph-Hz	400-3-50							
Apparent power	kVA	4.0	4.0	4.0	4.0	5.8	5.8	5.9	5.9
Total electric current	A	6.1	6.1	6.1	6.1	8.8	8.8	8.9	8.9
Absorbent pump, power input	kW	1.1	1.1	1.1	1.1	2.2	2.2	2.2	2.2
Absorbent pump, electric current	A	2.8	2.8	2.8	2.8	5.5	5.5	5.5	5.5
Refrigerant pump, power input	kW	0.2	0.2	0.2	0.2	0.2	0.2	0.3	0.3
Refrigerant pump, electric current	A	1.3	1.3	1.3	1.3	1.3	1.3	1.4	1.4
Purge pump, power input	kW	0.4	0.4	0.4	0.4	0.4	0.4	0.4	0.4
Purge pump, electric current	A	1.1	1.1	1.1	1.1	1.1	1.1	1.1	1.1
PD cell heater	kW	0.038	0.038	0.038	0.038	0.038	0.038	0.038	0.038
Control circuit	kW	0.3	0.3	0.3	0.3	0.3	0.3	0.3	0.3

* In accordance with ARI 560 - 2000
12.2 / 6.7 °C (fouling factor = 0.0176 m^2 K/kW)
29.4 / 38.4°C (fouling factor = 0.044 m^2 K/kW)
Saturated steam 100 kPa
** All sizes shipped as one-piece

Notes: These performance data are provided to support early design activity. For selection outside ARI operating conditions contact Carrier.

16TJ		31	32	41	42	51	52	53
Cooling capacity	kW	1266	1407	1582	1758	1969	2215	2461
Chilled water system*								
Flow rate	l/s	54.4	60.6	68.1	75.8	84.7	95.3	106.1
Pressure drops	kPa	48	51	44	39	35	47	61
Connection (ANSI)	in	6	6	8	8	8	8	8
Retention volume	m^3	0.35	0.38	0.49	0.56	0.7	0.77	0.83
Cooling water system*								
Flow rate	l/s	81.7	90.8	102.2	113.6	127.2	143.1	158.9
Pressure drops	kPa	54	57	59	63	39	52	68
Connection (ANSI)	in	8	8	10	10	12	12	12
Retention volume	m^3	0.98	1.05	1.31	1.41	1.98	2.13	2.28
Steam system								
Consumption	kg/h	2810	3120	3510	3900	4370	4920	5460
Steam inlet (ANSI)	in	8	8	8	8	10	10	10
Drain outlet (ANSI)	in	2	2	2-1/2	2-1/2	2-1/2	2-1/2	2-1/2
Control valve	in	4	4	4	4	4	5	5
Shutoff valve	in	4	4	4	4	4	5	5
Dimensions								
Length	mm	4940	4940	4990	4990	5060	5600	6100
Height	mm	2610	2610	2860	2860	3210	3210	3210
Width	mm	1630	1630	1700	1700	1990	1990	1990
Tube removal space	mm	4500	4500	4500	4500	4600	5200	5700
Weight								
Operating weight	kg	10300	10600	12500	12800	17500	18900	20200
Max shipping weight**	kg	8900	9100	10700	10900	14800	16000	17100
Power supply	V-ph-Hz	400-3-50						
Apparent power	kVA	7.3	7.3	7.3	7.3	7.3	7.3	7.3
Total electric current	A	10.9	10.9	10.9	10.9	10.9	10.9	10.9
Absorbent pump, power input	kW	3	3	3	3	3	3	3
Absorbent pump, electric current	A	7.5	7.5	7.5	7.5	7.5	7.5	7.5
Refrigerant pump, power input	kW	0.3	0.3	0.3	0.3	0.3	0.3	0.3
Refrigerant pump, electric current	A	1.4	1.4	1.4	1.4	1.4	1.4	1.4
Purge pump, power input	kW	0.4	0.4	0.4	0.4	0.4	0.4	0.4
Purge pump, electric current	A	1.1	1.1	1.1	1.1	1.1	1.1	1.1
PD cell heater	kW	0.038	0.038	0.038	0.038	0.038	0.038	0.038
Control circuit	kW	0.3	0.3	0.3	0.3	0.3	0.3	0.3

* In accordance with ARI 560 - 2000
12.2 / 6.7 °C (fouling factor = 0.0176 m^2 K/kW)
29.4 / 38.4°C (fouling factor = 0.044 m^2 K/kW)
Saturated steam 100 kPa
** All sizes shipped as one-piece

Notes: These performance data are provided to support early design activity. For selection outside ARI operating conditions contact Carrier.

Nomenclature

16TJ - 11

Capacity code

Unit type: Single-effect, steam-fired absorption chillers

Component identification

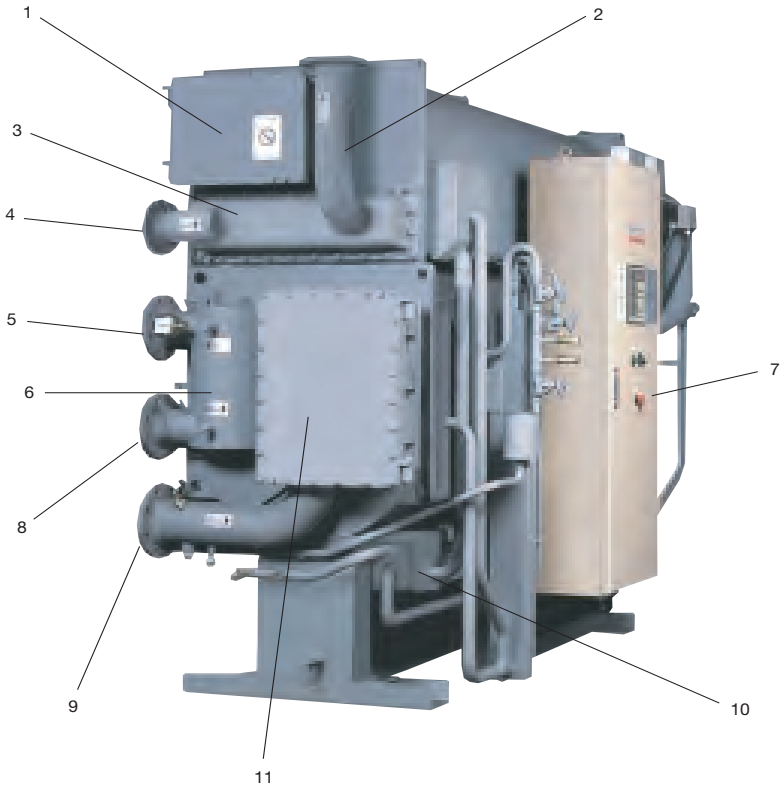

Legend

1. Condenser
2. Steam inlet
3. Generator
4. Chilled-water outlet
5. Control panel
6. Evaporator
7. Chilled-water inlet
8. Cooling water inlet
9. Heat exchanger
10. Heat reclaimer
11. Absorber

Scope of supply

1. Standards met

The units comply with the following standards:

- ARI 560-2000
- 2006/42/EC (machine directive)
- 2006/95/EC (low-voltage directive)
- 2004/108/EC (electromagnetic compatibility directive)
- 97/23/EC (pressure equipment directive).

2. Absorption chiller, comprising:

1. Lower shell
   - Evaporator and refrigerant dispersion tray
   - Absorber and absorbent dispersion tray with eliminators
   - Bases.
2. Upper shell
   - Generator with eliminators
   - Condenser with eliminators
   - Rupture disk.
3. Heat exchangers with refrigerant drain heat reclaimer
4. Pumps
   - Absorbent pump with isolating valves
   - Refrigerant pump with isolating valves
   - Purge pump.
5. Purge unit
   - Purge tank with ejector device
   - Diaphram valves and piping with liquid trap
   - Pressure sensor
   - Palladium cell with heater.
6. Control panel
   - Controller with data display
   - LEDs and operation buttons
   - Inverter for absorbent pump (option)
   - Circuit breaker
   - Transformer
   - Relays and terminal blocks
   - Purge pump operation switch.
7. Locally mounted parts
   - Temperature sensors
   - Chilled-water flow switch.
8. Interconnecting piping and wiring
   - Refrigerant and absorbent piping
   - Internal power and control wiring.
9. Initial charge
   - Absorbent (lithium bromide)
   - Refrigerant (water)
   - Inhibitor (lithium molybdate).

10. Painting
- Main unit: Rust-preventive paint
- Control panel: Finish paint.

11. Accessories
- Operation manual
- Washer (for fixing foundation bolts)
- Gasket and sealant for rupture disk
- Purge pump oil
- Matching flanges, gaskets, bolts and nuts.

3. Factory test

1. Check of external dimensions
2. Hydraulic pressure test of water headers Test pressure is 1.5 times of maximum working pressure
3. Vacuum-side leak test
4. Electric insulation resistance test
5. Dielectric breakdown test
6. Function test of electric circuit and safety devices

4. Scope of supply of the purchaser

1. Building and foundations
2. External chilled water, cooling water and steam piping work including various safety valves, isolation valves, mating flanges, gaskets, bolts and nuts, etc.
3. External wiring and piping for the chillers including necessary parts
4. Insulation for the chillers including necessary parts.
5. Finish painting of the chillers (if needed)
6. Cooling water entering temperature control device
7. Cooling water treatment device
8. Various temperature/pressure gauges for steam and water lines.
9. Cooling tower(s), chilled-water pump(s) and steam control valve and steam shut-off valve
10. Electric power supply (as specified)
11. Supply of chilled water, cooling water, steam and air* at rated conditions
12. Maintenance of the chiller
13. Necessary tools, labour and materials for installation and site test operation
14. Any other item not specifically mentioned in the scope of supply

* If pneumatic steam valve control is used.

Scope of order

Item	Standard	Option
Chilled water		
Temperature	Entering: 12.2 °C, leaving: 5 °C through 12 °C Leaving: 6.7 °C, temperature difference 3 K through 10 K	
Flow rate	0.043 l/s x kW - Changes depending on chilled water temperature difference (min 50%)	
Max. working pressure	1034 kPa	1540 kPa, 2068 kPa
Hydraulic test pressure	Max.working pressure x 1.5	Max working pressure x 1.5
Fouling factor	0.018 m^2 K/kW Max. 0.18 m^2 K/kW	
Tube material	Copper tube	Cu Ni tube
Water quality	Refer to JRA-GL02E-1994	No option
Structure of water header	Removable type and epoxy treated	No option
Manufacturing standard of water header	Flanged ANSI	No option
Cooling water		
Temperature	Entering: 29.4 °C Leaving: 38.4 °C, entering: 20 °C through 33 °C	
Flow rate	0.065 l/s per kW. Within the water flow rate range of each model	
Max. working pressure	1034 kPa	1540 kPa, 2068 kPa
Hydraulic test pressure	Max. working pressure x 1.5	
Fouling factor	0.044 m^2 K/kW. Max. 0.18 m^2 K/kW	
Tube material	Copper tube	Cu Ni tube
Water quality	Refer to JRA-GL02E-1994	No option
Structure of water header	Hinged type and epoxy treated	No option
Manufacturing standard of water header	Flanges ANSI	No option
Steam		
Supply pressure	100 kPa, 50 kPa through 100 kPa, max. 5 K superheat	
Specific steam consumption	2.22 kg/h/kW. Changes depend on the specifications.	
Max. working pressure	146 kPa	No option
Hydraulic test pressure	Max. working pressure x 1.5	No option
Tube material	9/1 Copper nickel tube	No option
Steam quality	Refer to JIS-B-8223	No option
Manufacturing standard of water header	Flanged ANSI	No option

Item	Standard	Option
Electricity		
Power supply	400 V - 3 phase - 50Hz (Voltage control within ±10%, frequency control within ±5%)	Contact the Carrier representative
Shipment	One section	Multi-shipment
Control		
Safety functions	Refrigerant temperature Chilled water freeze protection Chilled water flow switch Cooling water temperature HT generator temperature HT generator pressure HT generator solution level Crystallisation protection Motor protection	Cooling water flow switch
Capacity control	Digital PID control by chilled-water temperature	Inverter control of #1 absorbent pump
Parts	Selected by Carrier	No option
Control panel		
Painting	Munsell 5Y-7/1	No option
Indication lights	Operation	No option
	Stop	No option
	Alarm	No option
Display	LED	No option
External terminals (volt-free normally open contact)	Operation indication Stop indication Alarm indication Feedback indication Cooling mode indication	No option
Structure	Indoor type	No option
Parts	Selected by Carrier	No option
Electrical wiring and piping		
	Wire: 600 V polyvinyl grade (chloride-insulated wires)	No option
	Pipe: Plicatube (flexible metal conduits)	No option
Insulation condition		
Place	Indoor	No option
Ambient temperature	5 °C through 40 °C	No option
Ambient humidity	Relative humidity: Max. 90 % at 45 °C	No option
Atmosphere	Be sure the following are not present: - Corrosive gas - Explosive gas - Poisonous gas	No option

Features and advantages

- The Carrier 16TJ single-effect absorption chillers are designed for cooling applications where low-pressure steam is available as waste heat.
- They can tie into district steam systems.
- Carrier absorption chillers allow diversification of critical cooling requirements. Critical cooling loads are met with minimal electrical power input.
- They allow smaller emergency generators compared to an electrical driven chiller.
- The units are ozone-safe and CFC-free. Cooling requirements are met without chlorine-based refrigerants.
- They reduce the contribution to global warming and minimise the global impact by greatly reducing electricity consumption and production of greenhouse gases.
- The solution inhibitor has no impact on the environment.
- An absorption chiller does not utilise mechanical moving parts, and this leads to quiet, vibration-free operation.
- The use of high-efficiency heat transfer surfaces has reduced the space required for installation of the absorption chiller, resulting in a smaller footprint.

Controls

Expert self-diagnosis function

- The expert function is provided to monitor operating conditions, predict chiller information and maintain stable operation.

Predictive maintenance information

Graph 1 - Fouling of heat transfer tubes in cooling water system

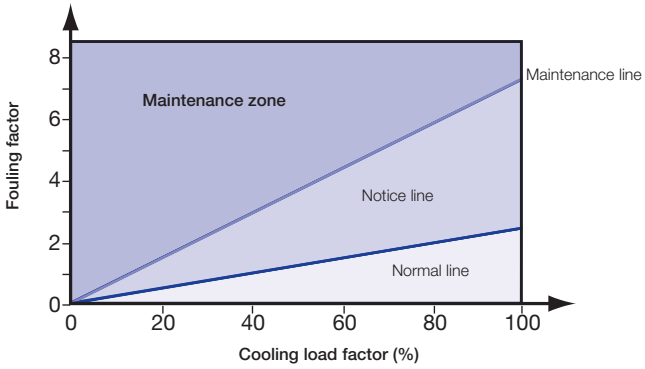

Graph 2 - Trend of absorbent concentration

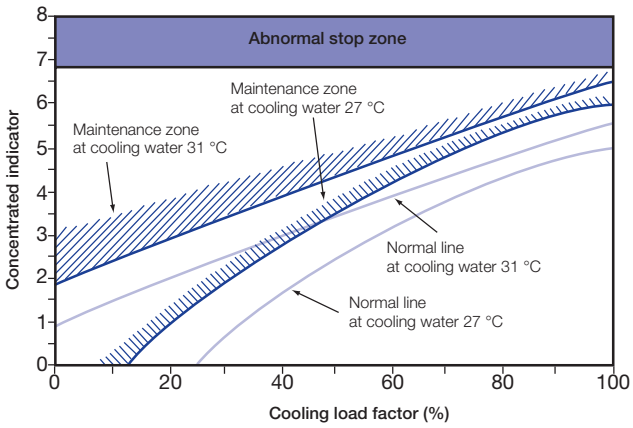

Graph 3 - Vacuum condition monitoring

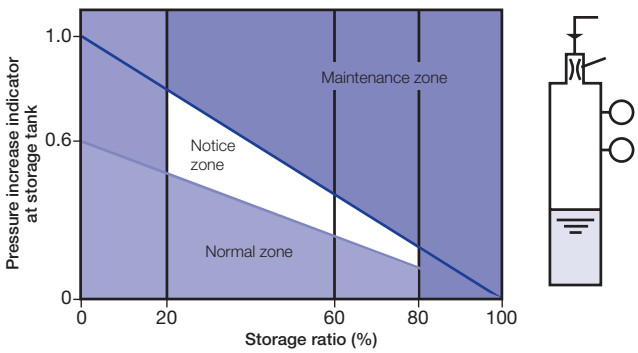

Legend
1. Storage tank
2. Diluted solution
3. Purge nozzle
4. Pd cell
5. Pressure sensor

Carrier control system

- The Carrier control system surpasses other proportional only control systems available today. The digital PID (proportional plus integral plus derivative) control maximises unit performance by maintaining a ±0.5 K variance in leaving chilled-water temperature from the setpoint. Proportional controls can typically only maintain a ±1 K variance from the setpoint. The controller's innovative design also incorporates the ability to start and stop the system chilled and cooling water pumps. During shutdown these pumps are sequenced to ensure a complete dilution cycle.
- The leaving chilled-water temperature is measured every five seconds and steam input is changed according to the gradient of the leaving chilled-water temperature curve. System temperatures, setpoints, and operational records are displayed along with indicator lights for the chiller and pumps.
- The Carrier control system offers its users selfdiagnostics by constantly monitoring the chiller status and will automatically shut the chiller down if a fault occurs. The cause of shutdown will be retained in the memory and can be displayed for immediate operator review. The controller's memory will also retain and display the cause of the last three system fault conditions. This method of retaining fault conditions is extremely useful for maintaining an accurate record of unit performance and fault history.

Display and control board
Figure 2 - Indication lights

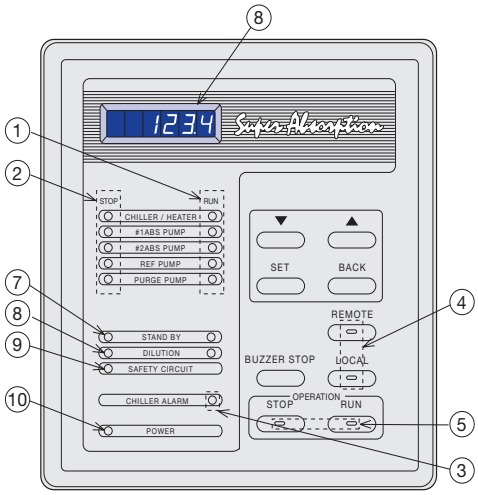

Legend

Name		LED colour
1.	Operation indication light	Green
2.	Stop indication light	Orange
3.	Alarm indication light	Red
4.	Remote/local select button with	Green
	LED	Green
5.	Operation select button with LED	7 segment LED (red)
6.	Data display	Green
7.	Stand-by indication light	Green
8.	Dilution indication light	Green
9.	Safety circuit indication light	Orange
10.	Power indication light	Green
GL.	Purge indication light	
43P.	Purge pump on-off switch	
43ES.	Emergency stop switch	

Fast digital PID control

The introduction of new digital PID control stabilises the chilled water temperature with high accuracy. It quickly responds to the load fluctuation and supplies stable chilled water temperature. It is suitable for air-conditioning intelligent buildings which require sophisticated control.

Saving energy with the inverter (option)

Balancing the load and flow rate with the absorbent pump's inverter control enables efficient and energy-saving operation. As a result, it reduces input energy and electric power consumption. Running cost is decreased by 5% compared to non-inverter control.

Graph 4 - Running cost curve

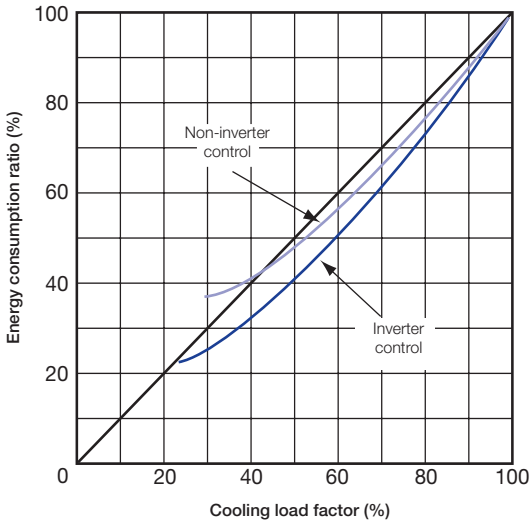

Notes:
1. Chilled-water leaving temperature 7 °C constant
2. Cooling water entering temperature:

Load factor (%)	Temperature (°C)
100	32
50	27
30	25

Purge system

- The high-performance purge system maintains the required operating pressure, preserves chiller performance characteristics, minimises chiller maintenance to one purge operation per season (for year-round operation).

Steam valve opening control

- At the start-up, the opening angle of the steam control valve is controlled in three stages, reducing the amount of steam and the time needed to reach the desired level, compared with the previous model.
- Adjusting the opening speed of the steam control valve at the second and third stage, it is possible to set up the most suitable conditions for the site auxiliary equipment.

Graph 5 - Steam valve opening control

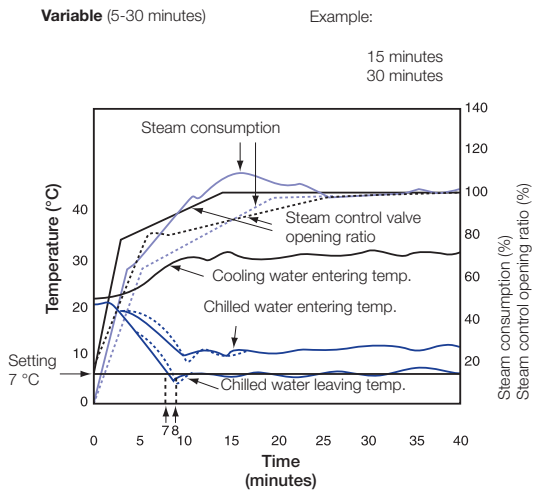

Expansion of safe operating zone

- This ensures quick response to rapid changes and maintains stable operation.
- The safe operating zone is between 19 °C and 34 °C cooling water temperature (for a nominal cooling water entering temperature of 32 °C).

Graph 6 - Safe operating zone chart

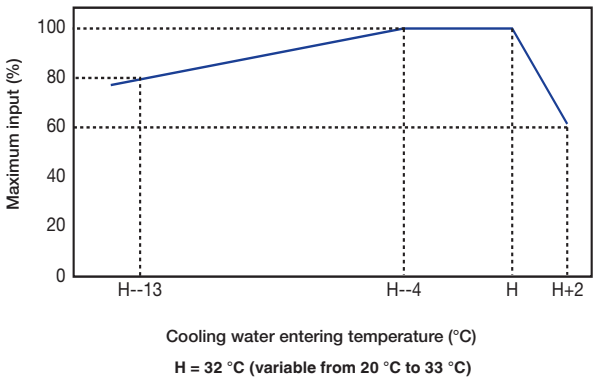

Crystallisation protection

- A microprocessor monitors the absorbent concentration. Steam supply is stopped, and the unit is returned to normal operation, when the concentration is over a certain limit, to prevent the crystallisation of absorbent.

Dimensions/clearances

16TJ 11 through 16TJ 12

NOTES

(1) DIMENSIONS (L),(W),(H),ARE FOR STANDARD MACHINE.
THE DIMENSIONS ARE CHANGED BY PARTS ADDED.

(2) ⊕ INDICATES THE POSITION OF ANCHOR BOLTS.

(3) CLEARANCE SPACE MUST BE SAVED EITHER SIDE OF THE CHILLER

(4) MATING FLANGE OF ALL EXTERNAL WATER PIPING ARE
PROVIDE WELDED ANSI 150LB FLANGE WITH CHILLER.

(5) ⇧ INDICATES THE POSITION OF THE POWER SUPPLY
CONNECTION ON CONTROL PANEL.(DIA. 35 MM)

(6) INSTALLATION CLEARANCE
¥LONGITUDINAL DISTANCE:1000 MM
¥TOP :200 MM
¥OTHERS:500 MM

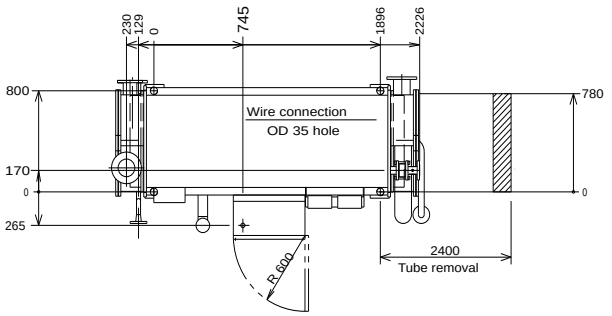

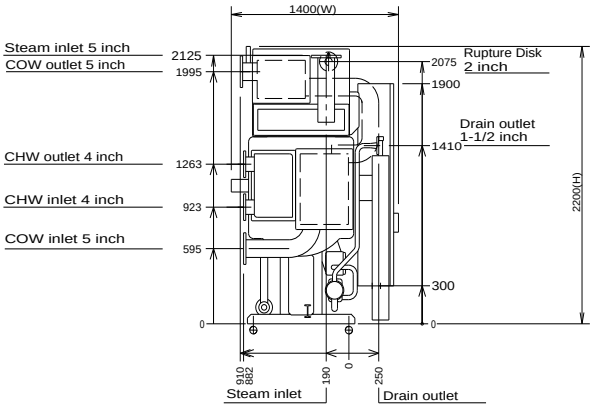

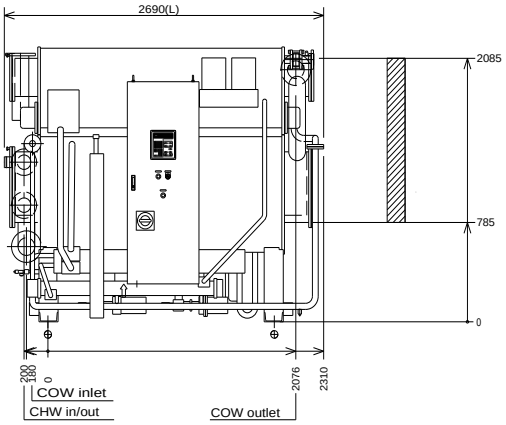

16TJ 13 through 16TJ 14

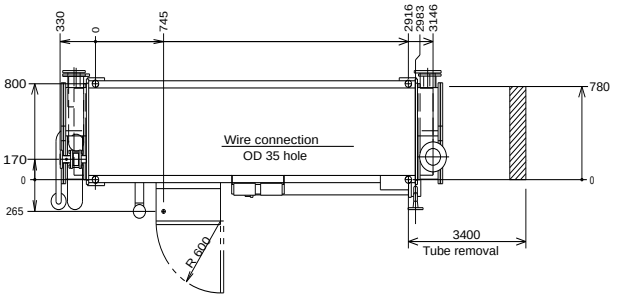

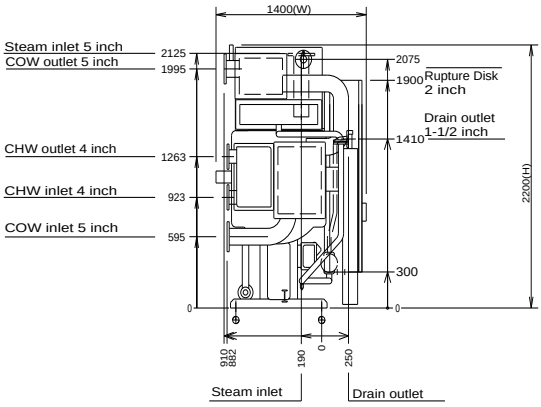

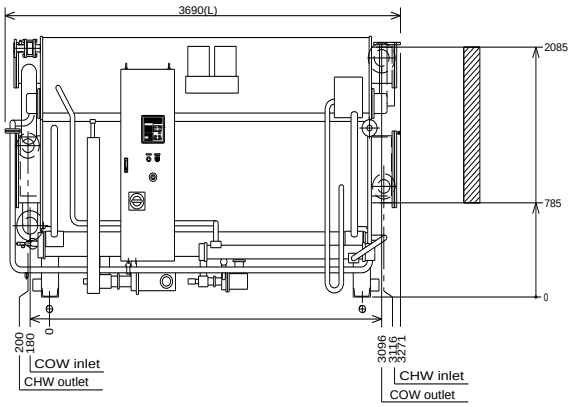

Note: Dimensions are for guidance only. Always refer to the certified drawings supplied upon request when designing an installation.

16TJ 21 through 16TJ 22

NOTES

(1) DIMENSIONS (L),(W),(H),ARE FOR STANDARD MACHINE. THE DIMENSIONS ARE CHANGED BY PARTS ADDED.

(2) ⊕ INDICATES THE POSITION OF ANCHOR BOLTS.

(3) CLEARANCE SPACE MUST BE SAVED EITHER SIDE OF THE CHILLER

(4) MATING FLANGE OF ALL EXTERNAL WATER PIPING ARE PROVIDE WELDED ANSI 150LB FLANGE WITH CHILLER.

(5) ⇧ INDICATES THE POSITION OF THE POWER SUPPLY CONNECTION ON CONTROL PANEL.(DIA. 35 MM)

(6) INSTALLATION CLEARANCE
¥LONGITUDINAL DISTANCE:1000 MM
¥TOP :200 MM
¥OTHERS:500 MM

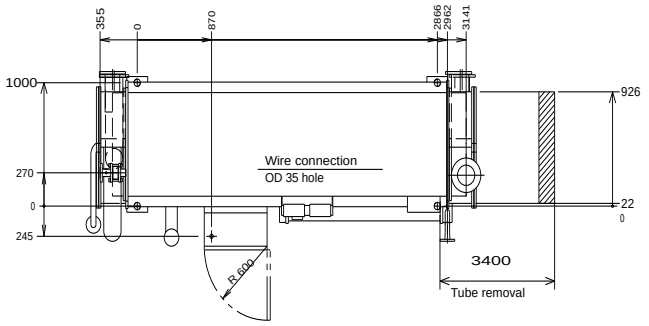

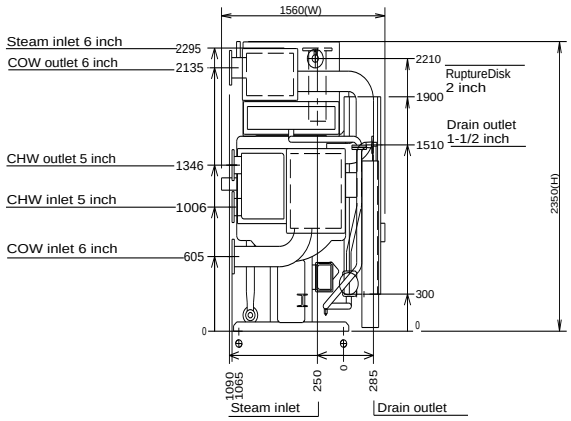

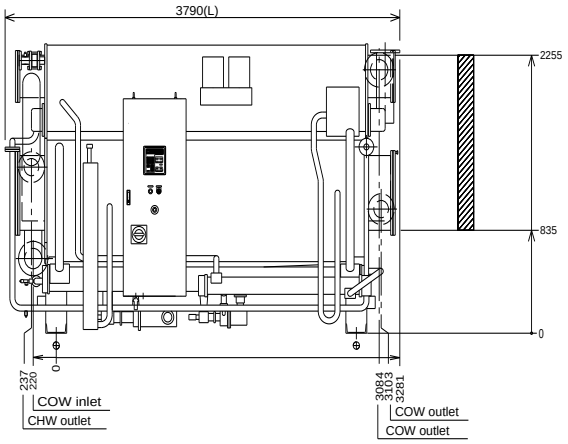

16TJ 23 through 16TJ 24

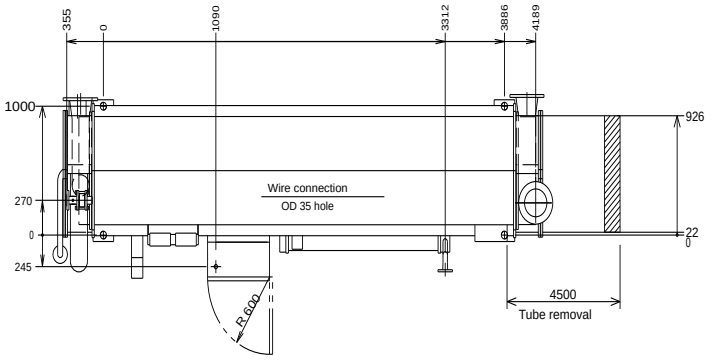

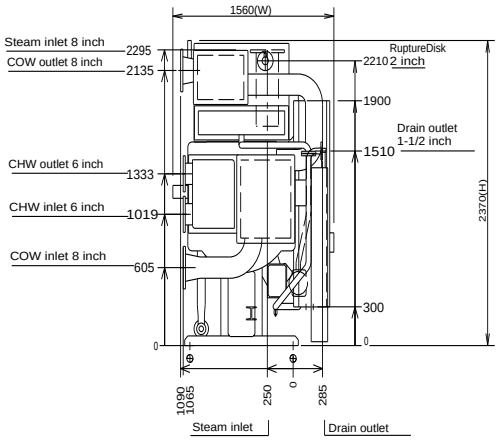

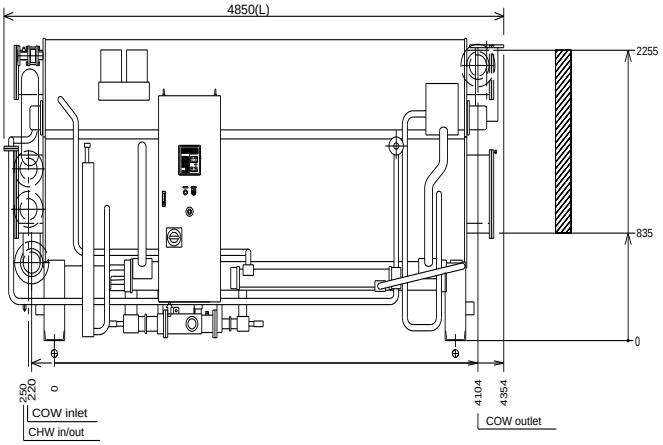

Note: Dimensions are for guidance only. Always refer to the certified drawings supplied upon request when designing an installation.

16TJ 31 through 16TJ 32

NOTES

(1) DIMENSIONS (L),(W),(H),ARE FOR STANDARD MACHINE.
THE DIMENSIONS ARE CHANGED BY PARTS ADDED.

(2) ⊕ INDICATES THE POSITION OF ANCHOR BOLTS.

(3) CLEARANCE SPACE MUST BE SAVED EITHER SIDE OF THE CHILLER

(4) MATING FLANGE OF ALL EXTERNAL WATER PIPING ARE
PROVIDE WELDED ANSI 150LB FLANGE WITH CHILLER.

(5) ⇧ INDICATES THE POSITION OF THE POWER SUPPLY
CONNECTION ON CONTROL PANEL.(DIA. 35 MM)

(6) INSTALLATION CLEARANCE
¥LONGITUDINAL DISTANCE:1000 MM
¥TOP :200 MM
¥OTHERS:500 MM

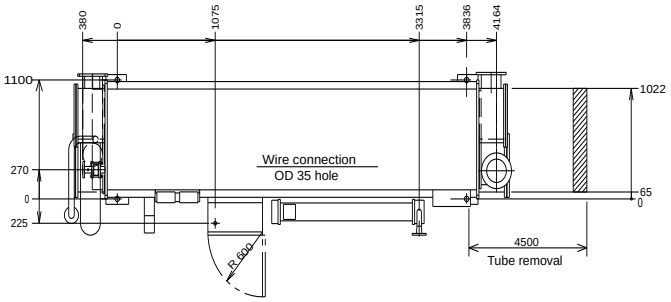

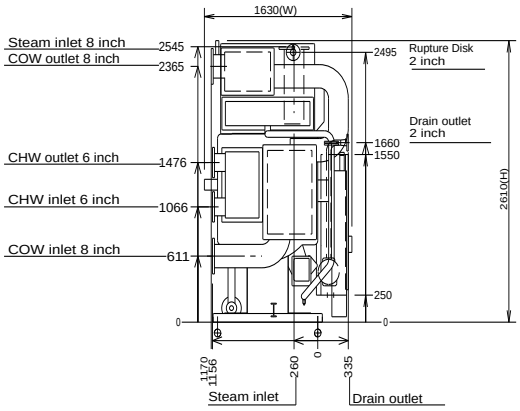

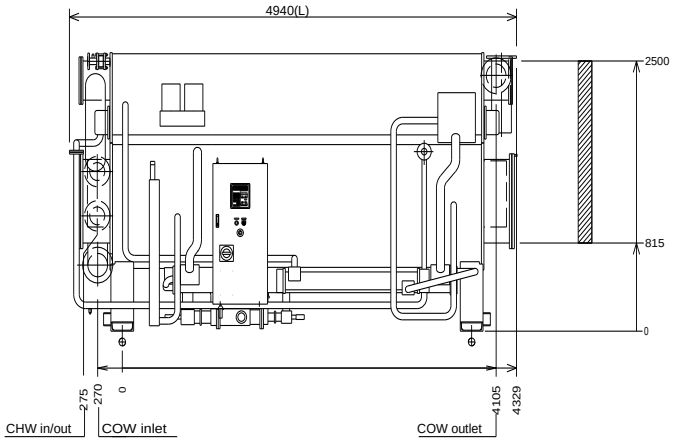

16TJ 41 through 16TJ 42

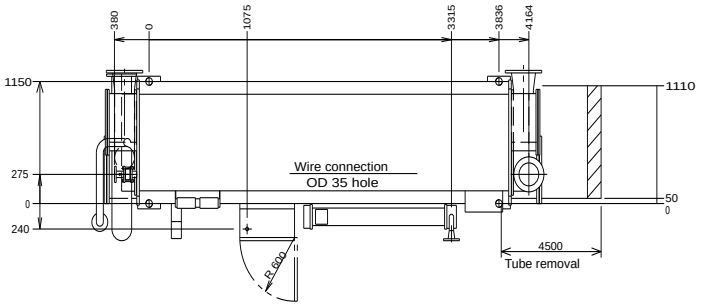

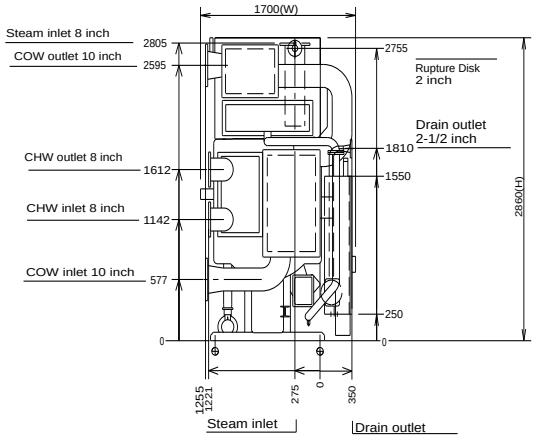

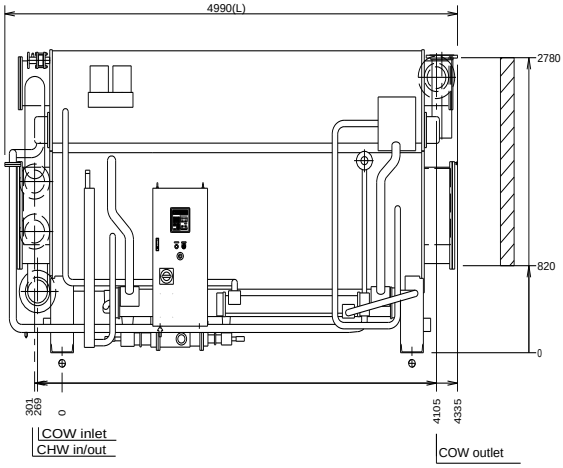

Note: Dimensions are for guidance only. Always refer to the certified drawings supplied upon request when designing an installation.

16TJ 51

NOTES

(1) DIMENSIONS (L),(W),(H),ARE FOR STANDARD MACHINE. THE DIMENSIONS ARE CHANGED BY PARTS ADDED.

(2) ⊕ INDICATES THE POSITION OF ANCHOR BOLTS.

(3) CLEARANCE SPACE MUST BE SAVED EITHER SIDE OF THE CHILLER

(4) MATING FLANGE OF ALL EXTERNAL WATER PIPING ARE PROVIDE WELDED ANSI 150LB FLANGE WITH CHILLER.

(5) ⇧ INDICATES THE POSITION OF THE POWER SUPPLY CONNECTION ON CONTROL PANEL.(DIA. 35 MM)

(6) INSTALLATION CLEARANCE
¥LONGITUDINAL DISTANCE:1000 MM
¥TOP :200 MM
¥OTHERS:500 MM

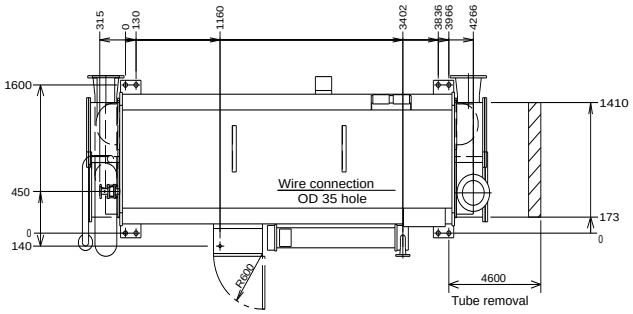

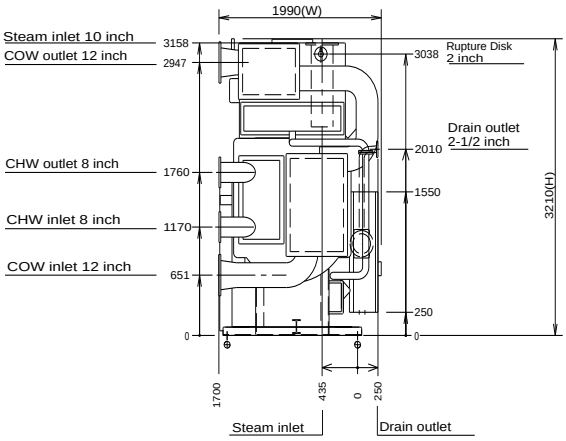

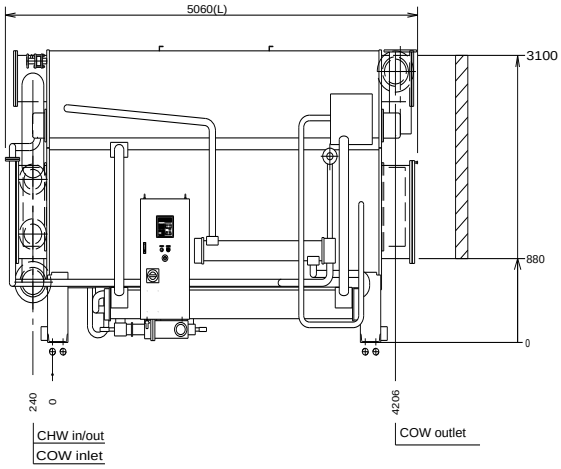

16TJ 52

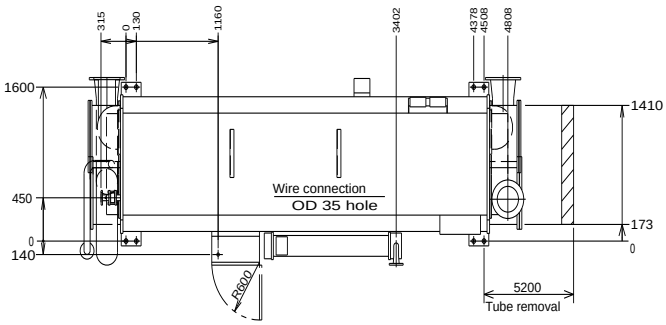

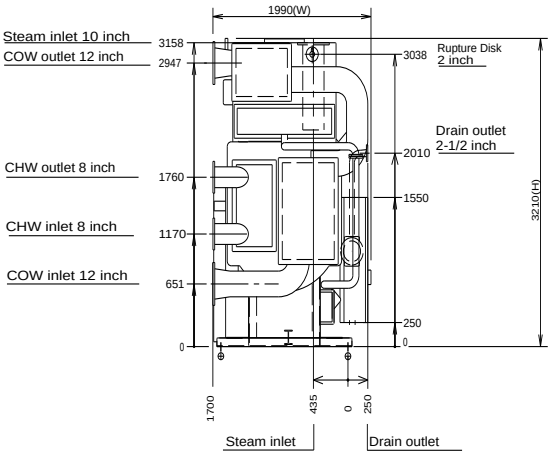

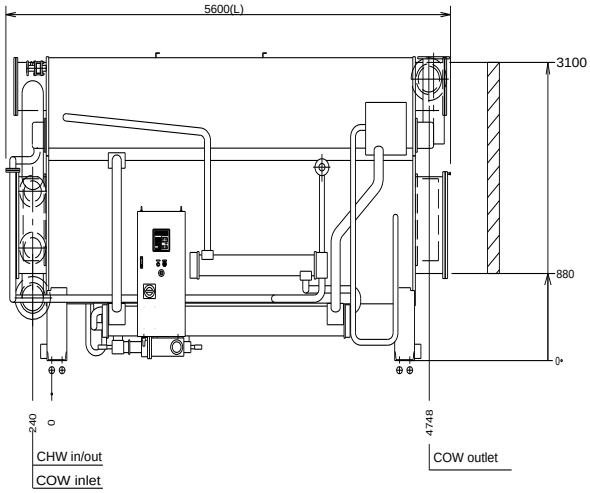

Note: Dimensions are for guidance only. Always refer to the certified drawings supplied upon request when designing an installation.

16TJ 53

NOTES

(1) DIMENSIONS (L),(W),(H),ARE FOR STANDARD MACHINE.
THE DIMENSIONS ARE CHANGED BY PARTS ADDED.

(2) ⊕ INDICATES THE POSITION OF ANCHOR BOLTS.

(3) CLEARANCE SPACE MUST BE SAVED EITHER SIDE OF THE CHILLER

(4) MATING FLANGE OF ALL EXTERNAL WATER PIPING ARE
PROVIDE WELDED ANSI 150LB FLANGE WITH CHILLER.

(5) ⇧ INDICATES THE POSITION OF THE POWER SUPPLY
CONNECTION ON CONTROL PANEL.(DIA. 35 MM)

(6) INSTALLATION CLEARANCE
¥LONGITUDINAL DISTANCE:1000 MM
¥TOP :200 MM
¥OTHERS:500 MM

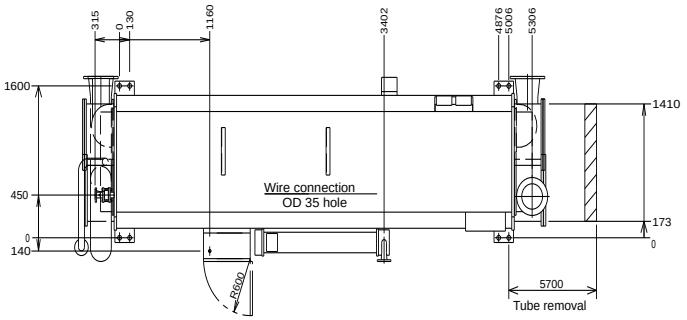

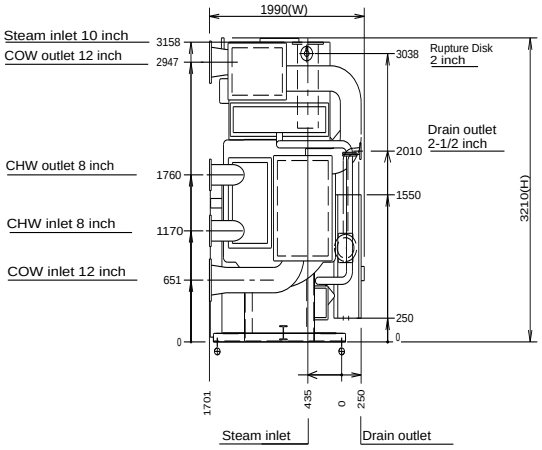

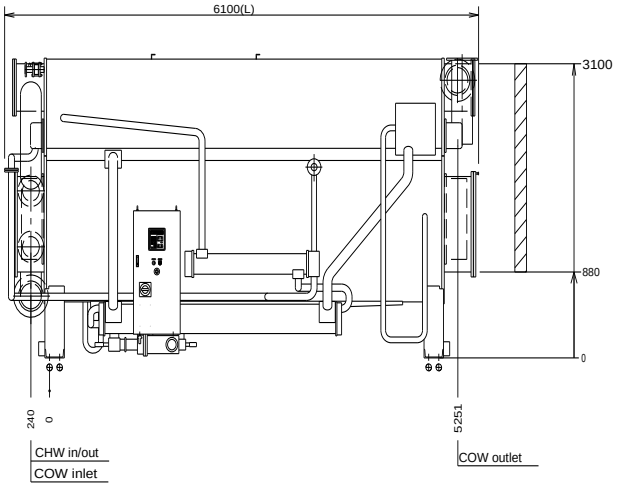

Note: Dimensions are for guidance only. Always refer to the certified drawings supplied upon request when designing an installation.

Foundation dimensions, mm

Figure 3 - 16TJ-11 through 16TJ-42

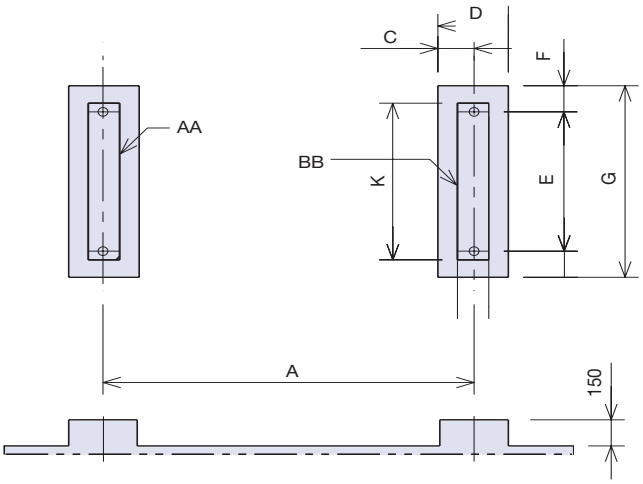

Figure 5 - 16TJ-51 through 16TJ-53

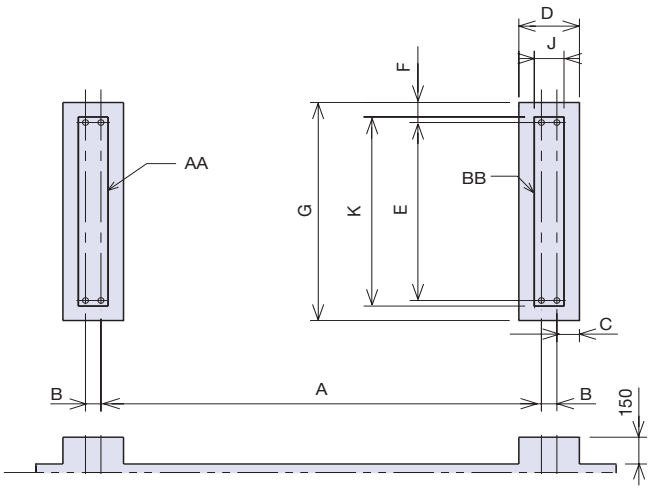

Figure 4 - Details of weld

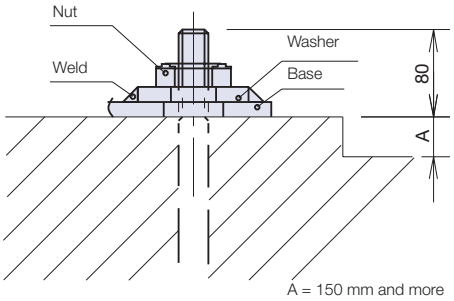

Notes:
1. The machine base has ø50-mm hole for the anchor bolt.
2. The anchor bolt should be fixed as shown in the detail drawing.Washer should be welded to the base (see Fig. 4)
3. There should be a drain channel around the foundation.
4. The floor surface should be made waterproof to facilitate maintenance work.
5. The surface of the foundation should be made flat.
6. Anchor bolts and nuts are to be supplied by customer.

Dimensional data

16TJ	Weight, kg			Dimensions. mm								
	AA + BB	AA	BB	A	B	C	D	E	F	G	J	K
11	3800	1900	1900	1890	--	175	360	800	150	1100	160	900
12	4000	2000	2000	1890	--	175	360	800	150	1100	160	900
13	4900	2450	2450	2916	--	175	360	800	150	1100	160	900
14	5100	2550	2550	2916	--	175	360	800	150	1100	160	900
21	6200	3100	3100	2866	--	200	400	1000	150	1300	200	1100
22	6500	3250	3250	2866	--	200	400	1000	150	1300	200	1100
23	7600	3800	3800	3886	--	200	400	1000	150	1300	200	1100
24	8000	4000	4000	3886	--	200	400	1000	150	1300	200	1100
31	9800	4900	4900	3836	--	225	450	1100	150	1400	250	1200
32	10200	5100	5100	3836	--	225	450	1100	150	1400	250	1200
41	11800	5900	5900	3836	--	225	450	1150	150	1450	250	1250
42	12300	6150	6150	3836	--	225	450	1150	150	1450	250	1250
51	16900	8450	8450	3706	130	190	510	1600	180	1960	250	1700
52	18300	9150	9150	4248	130	190	510	1600	180	1960	250	1700
53	19600	9800	9800	4746	130	190	510	1600	180	1960	250	1700

Control panel dimensions, mm

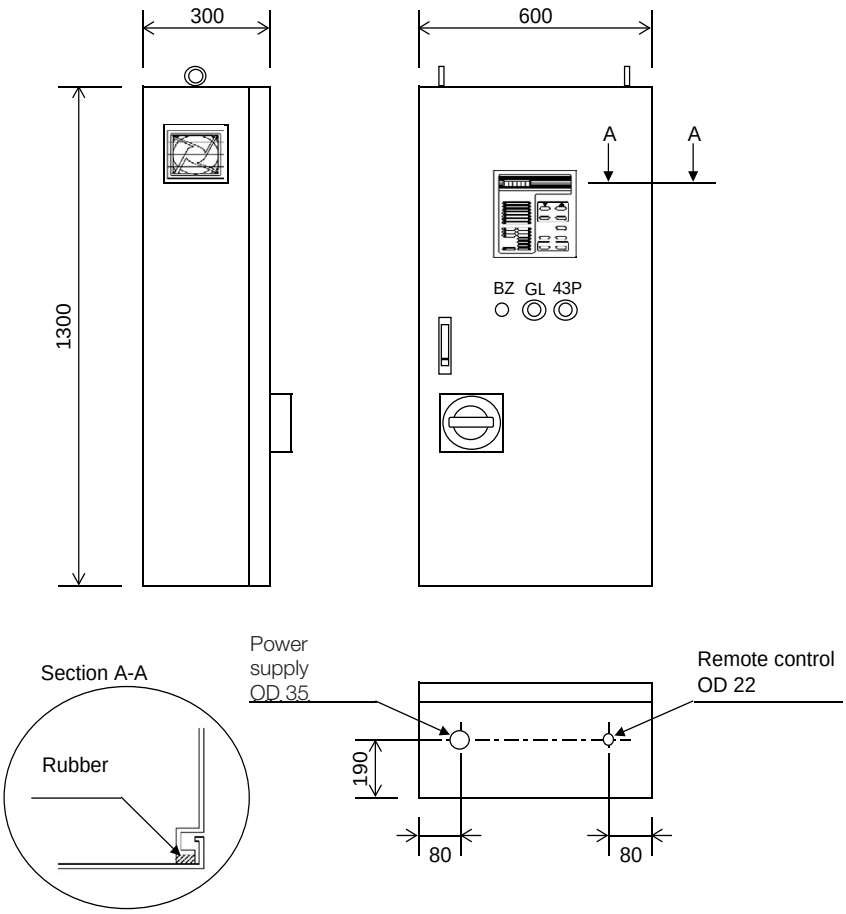

16NK

Nominal cooling capacity 345 to 4652 kW

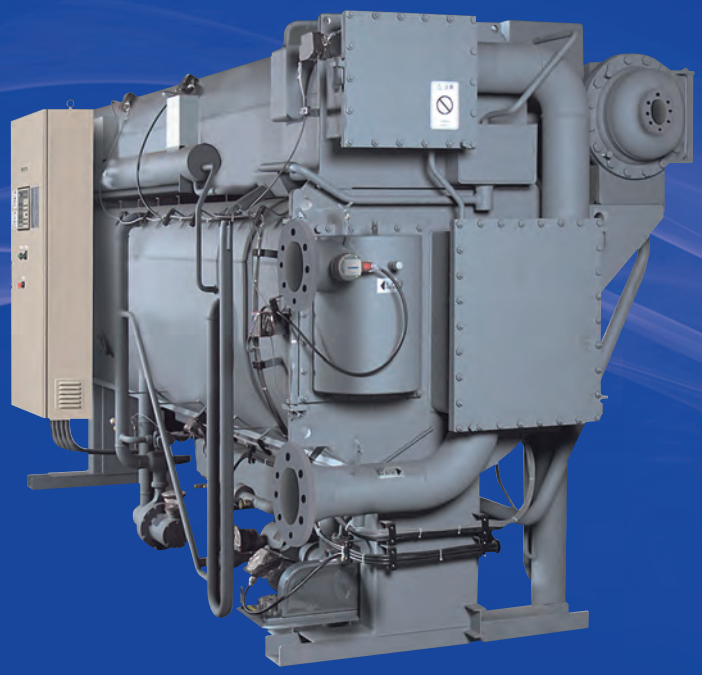

SUPER ABSORPTION

Eighteen sizes with nominal cooling capacities from 345 to 4652 kW.

The 16NK absorption chillers are designed for cooling applications where low-pressure steam is available as waste heat.

Minimises global warming effect by greatly reducing power consumption and eliminating the generation of greenhouse gases.

Allows diversification of critical cooling requirements. Critical cooling loads are met with minimal electrical power input.

Allows use of smaller emergency generators since the electrical load associated with an absorption chiller is minimal.

Physical data

16NK		11	12	13	21	22	31	32	41	42
Cooling capacity	kW	345	447	549	689	861	1034	1238	1378	1551
Chilled water system*										
Flow rate	l/s	14.8	19.2	23.6	29.7	37.2	44.4	53.3	59.4	66.7
Pressure drop	kPa	44	64	64	57	42	41	49	46	41
Connection (ANSI)	in	4	4	4	5	6	6	6	8	8
Retention volume	m^3	0.13	0.15	0.17	0.24	0.28	0.34	0.36	0.46	0.48
Cooling water system*										
Flow rate	l/s	24.7	31.9	39.4	49.4	61.9	74.2	88.9	98.9	111.4
Pressure drop	kPa	68	40	49	109	74	53	65	67	73
Connection (ANSI)	in	5	5	5	6	8	8	8	10	10
Retention volume	m^3	0.34	0.38	0.42	0.58	0.63	0.89	0.95	1.11	1.9
Steam system		Saturated steam 784 kPa								
Consumption	kg/h	400	510	630	790	980	1180	1410	1570	1770
Dimensions	mm									
Length A		2810	3850	3850	3880	4920	5040	5040	5100	5100
Height B		2200	2200	2200	2250	2250	2390	2390	2600	2600
Width C		2050	1910	1910	2240	2070	2170	2170	2400	2400
Operating weight	kg	4600	5800	6100	7500	8800	11200	11800	13900	14500
Power supply	V-ph-Hz	400-3-50								
Total current drawn	A	10.8	10.8	10.8	13.3	13.3	13.6	13.6	20.7	20.7

16NK		51	52	53	61	62	63	71	72	81
Cooling capacity	kW	1723	1927	2170	2412	2757	3101	3446	3963	4652
Chilled water system*										
Flow rate	l/s	74.2	83.1	93.9	103.9	118.6	133.6	148.3	170.6	200.3
Pressure drop	kPa	98	46	61	123	83	78	54	81	84
Connection (ANSI)	in	8	8	8	10	10	10	12	12	14
Retention volume	m^3	0.65	0.71	0.77	0.99	1.06	1.13	1.41	1.61	1.94
Cooling water system*										
Flow rate	l/s	123.6	138.3	155.6	173.1	197.8	222.5	247.2	284.4	333.9
Pressure drop	kPa	53	71	94	61	83	111	77	113	122
Connection (ANSI)	in	12	12	12	14	14	14	16	16	16
Retention volume	m^3	1.87	2.01	2.14	2.79	2.97	3.15	3.67	4.11	4.76
Steam system		Saturated steam 784 kPa								
Consumption	kg/h	1960	2200	2470	2750	3140	3530	3920	4510	5300
Dimensions	mm									
Length A		5330	5870	6370	6100	6190	6710	6440	7460	7460
Height B		2900	2900	2900	3330	3330	3330	3450	3450	3650
Width C		2770	2800	2800	2970	3000	3000	3300	3300	3500
Operating weight	kg	18800	20800	22300	26500	30000	32100	38000	42300	47300
Power supply	V-ph-Hz	400-3-50								
Total current drawn	A	22.7	24.5	24.5	25.5	25	25	33.5	33.5	33.5

Cooling per ARI 560 2000:
* 12.2 —> 6.7°C (fouling factor = 0.0176 m^2 K/kW)
** 29.4 —> 35.4°C (fouling factor = 0.044 m^2 K/kW)

Features and advantages

- Eighteen sizes with nominal cooling capacities from 345 to 4652 kW.
- The 16NK absorption chillers are designed for cooling applications where low-pressure steam is available as waste heat.
- Can tie into district steam systems.
- Allows diversification of critical cooling requirements. Critical cooling loads are met with minimal electrical power input.
- Allows use of smaller emergency generators since the electrical load associated with an absorption chiller is minimal.
- Environmentally balanced and CFC-free.
- Minimises global warming effect by greatly reducing power consumption and eliminating the generation of greenhouse gases.
- Reduced noise and vibration levels. The absorption chiller does not use a large motor-compressor, leading to quiet, vibration-free operation.
- Small footprint. The high efficiency associated with double-effect chillers results in a reduction of the required installation space.
- Auto-diagnosis system monitors operating conditions, predicts chiller information and maintains stable operation.
- Advanced high-precision control system.
- Absorption pump with inverter control for efficient, energy-saving operation.
- High-performance purge system minimises maintenance requirements.
- State-of-the-art protection devices guarantee enhanced operating safety.

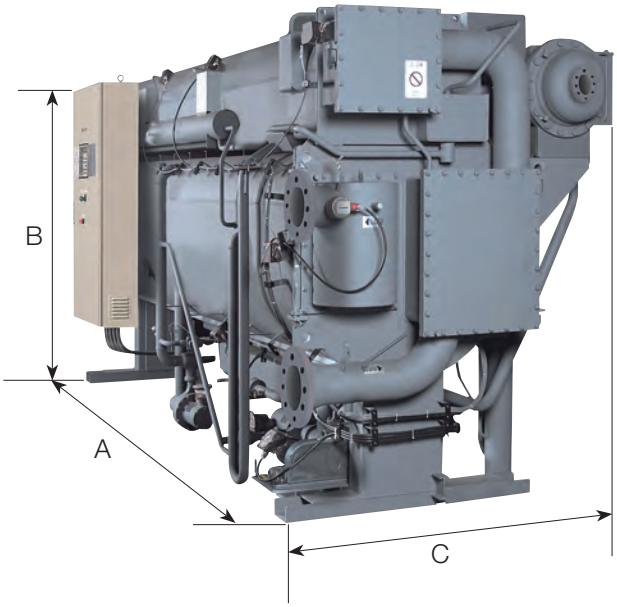

Controls

Display and control board

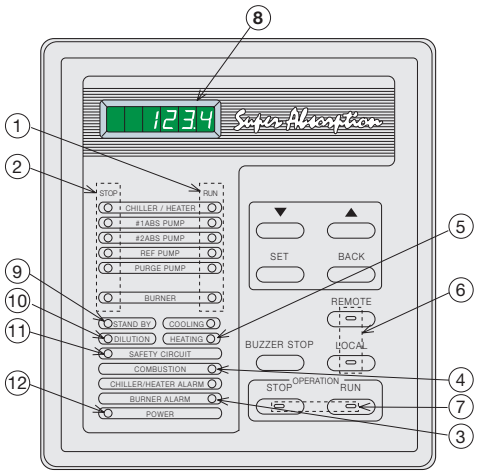

1 Operation indication
2 Stop indication
3 Alarm indication
4 Combustion indication
5 Cooling/heating indication
6 Remote/local select button
7 Operation mode selection
8 Data display
9 Stand-by indication
10 Dilution indication
11 Safety circuit indication
12 Power indication

10TE

NEW

COOLING

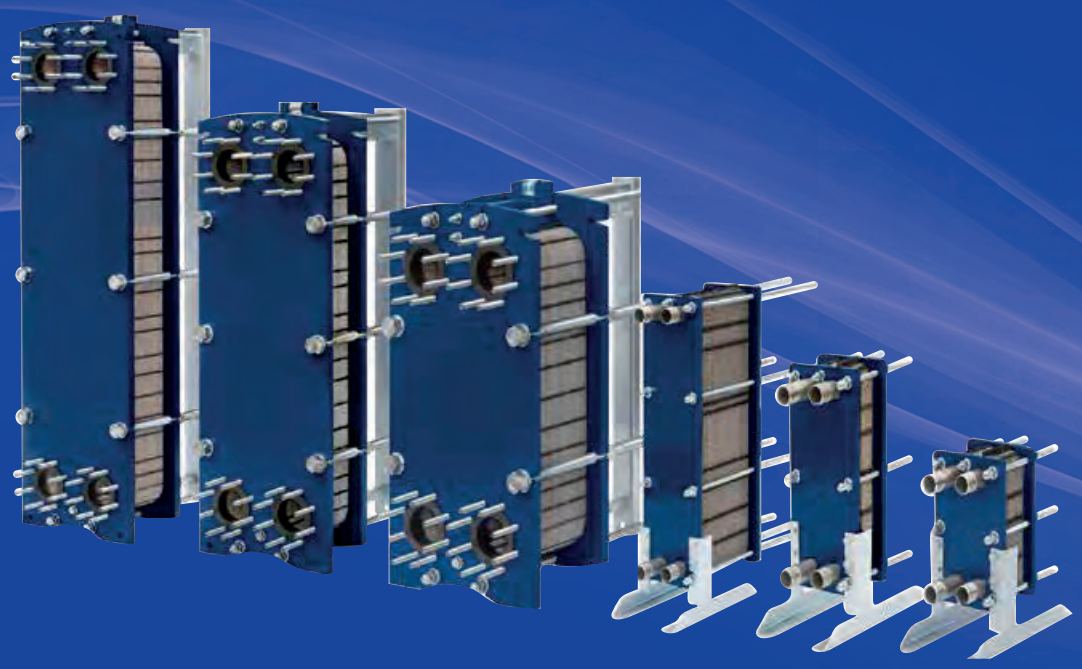

10TE gasketed plate heat exchangers are particularly well-suited to exchanges between two fluids, and therefore to a wide range of applications:

- Heating sub-stations
- Heating of domestic water
- Swimming pool heating
- Buffer on heat pump
- Recovery on corrosive waste
- Geothermal energy
- Oil refrigeration
- Industrial processes

Decoupling of the machines to the system

Cost efficient design

Qualified and reliable

A high thermal transfer capacity

Particularly well suited to low temperature differences between the two fluids

Range

			10TE020+	10TE040+	10TE080+	10TE070+	10TE160+	10TE260+	10TE125+	10TE180+
Surface area		m²	0.021	0.041	0.081	0.078	0.164	0.254	0.125	0.18
Maximum flow rate		m³/h	19	19	19	63	63	63	80	83
Connection			DN 32	DN 32	DN 32	DN 50	DN 50	DN 50	DN 65	DN 65
Standard pressure (stainless)			6	6	6	6	6	6	10	10
Maximum pressure	Stainless steel		25	25	25	25	25	25	16	10
	254 SMO		10	10	10	16	16	16	10	_
	Titanium		10	10	10	16	16	16	16	10
Max. number of plates			75	75	101	151	251	251	151	151
Plate thickness	304 stainless steel		0.5	0.5	0.5	0.5	0.5	0.5	0.5	0.5
	316L stainless steel		0.4/0.5 /0.6	0.4 / 0.5 / 0.6	0.4 / 0.5 / 0.6	0.4 / 0.5 / 0.6	0.4 / 0.5 / 0.6	0.4 / 0.5 / 0.6	0.4 / 0.5 / 0.6	0.4 / 0.5
	254 SMO		0.6	0.6	0.6	0.6	0.6	0.6	0.6	_
	Titanium		0.5	0.5	0.5	0.5 / 0.6	0.5 / 0.6	0.5 / 0.6	0.5	0.5
Plate patterns			H	H	H	H / L	H / L	H / L	H / L	H / L
Gasket material (max. T°)	NBR (NITRYL) (110°C)		YES	YES	YES	YES	YES	YES	YES	YES
	EPDM prx (160°C)		YES	YES	YES	YES	YES	YES	YES	YES
	VITON (200°C)		YES	YES	YES	YES	YES	YES	YES	_
Capacity between plates		l	0.063	0.103	0.181	0.217	0.383	0.555	0.366	0.50
Max. transfer area		m²	1.6	3.1	8.2	11.6	40.8	63.3	19	27

			10TE300+	10TE450+	10TE700+	10TE400+	10TE600+	10TE900+	10TE650+	10TE990+
Surface area		m²	0.268	0.482	0.697	0.39	0.645	0.90	0.606	0.972
Maximum flow rate		m³/h	240	240	240	380	380	380	800	730
Connection			DN 100	DN 100	DN 100	DN 150	DN 150	DN 150	DN 200	DN 200
Standard pressure (stainless)			10	10	10	10	10	10	10	10
Maximum pressure	Stainless steel		25	25	25	16	16	16	16	16
	254 SMO		16	16	16	16	16	16	10	_
	Titanium		16	16	16	16	16	_	10	10
Max. number of plates			401	401	401	551	551	701	551	551
Plate thickness	304 stainless steel		0.4 / 0.5 / 0.6	0.4 / 0.5 / 0.6	0.4 / 0.5 / 0.6	0.5 / 0.6	0.5 / 0.6	0.5 / 0.6	0.5 / 0.6	0.5 / 0.6
	316L stainless steel		0.5 / 0.6 / 0.7	0.5 / 0.6 / 0.7	0.5 / 0.6 / 0.7	0.5 / 0.6	0.5 / 0.6	0.5 / 0.6	0.5 / 0.6	0.5 / 0.6
	254 SMO		0.6	0.6	0.6	0.6*	0.6*	0.6*	0.6*	_
	Titanium		0.6	0.6	0.6	0.6*	0.6*	_	0.7	0.6
Plate patterns			H / L	H / L	H / L	H / L	H / L	H / L	H / L	H / L
Gasket material (max. T°)	NBR (NITRYL) (110°C)		YES	YES	YES	YES	YES	YES	YES	YES
	EPDM prx (160°C)		YES	YES	YES	YES	YES	YES	YES	YES
	VITON (200°C)		YES	YES	YES	YES	YES	YES	YES	_
Capacity between plates		l	0.766	1.217	1.669	1.122	1.659	2.197	2.109	2.339
Max. transfer area		m²	107.5	193	279.5	215	355	631	334	534

The 10TE range is built with plug-in gaskets and lateral circulation.
* Please consult us.

Description

The unit is formed of a set of stamped plates (P) and gaskets tightened between 2 plates, one fixed (F) and one movable (B), using compression bolts (T). The gaskets (J) create flow channels between the plates and prevent venting to the atmosphere. The connection for the fluids is created by 4 tubes (M) integrated into the plate(s) or added.

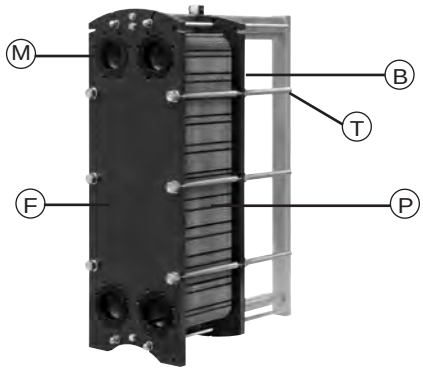

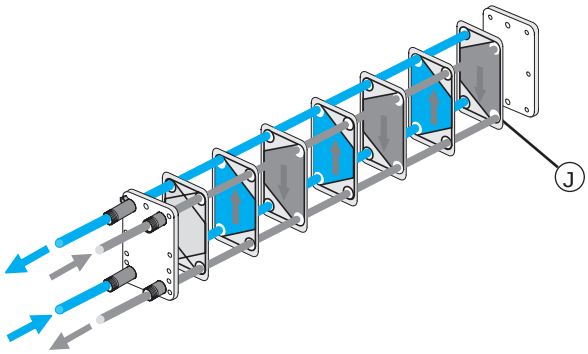

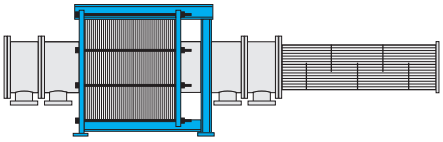

Compact footprint

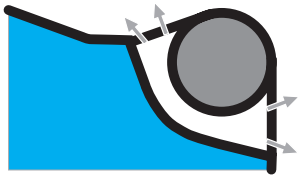

Double gasket between fluids

Note: selection of single pass exchange is the only scenario in which the 4 tubes are fitted on the same plate.

Heating selection

Due to the range's extreme modularity, the selection has been optimised based on the thermal requirements and the allowable pressure drops for the fluids utilised. The importance of this factor must not be underestimated when selecting a heat exchanger, as it influences the choice and number of plates and thus the transfer area.

The transfer area is also influenced by other factors, such as the height to width ratio, the gap between the plates, and the angle and depth of the chevron patterns.

The thermal performance of 10TE heat exchangers is guaranteed.

Advantages

- Excellent transfer coefficient, giving a reduced surface area
- Very low pinch point temperatures possible
- High corrosion resistance
- Compact footprint
- Easy to install
- Low-capacity circuits and fluid retention volume
- Option of surface area extension
- Unit can be cleaned in-place using a circulation system
- (CIP)
- Maximum differential pressure = maximum operating pressure

Precautions

- Ensure the exchanger gaskets are not damaged (one per plate):
  - Avoid water hammering and overpressure, and limit on/off cycles.
  - Do not use $^{1}/_{4}$-turn valves.
  - Use with steam between 0 and 3 bar (effective).
  - Provide a control system adapted to the requirements and which takes the low capacity of the circuits into account.
- Ensure the plates are kept clean so they maintain their thermal efficiency:
  - Filter fluids containing suspended particles.
  - Ensure the fluids are constantly circulating in the exchanger to prevent any build-up or scale.
  - Install nozzles on the pipes for cleaning in place.

Thermoformed insulation (DN 32+ & DN 65 option)

■ Description

A thermoformed and semi-rigid prefabricated insulation easy to install and to adjust to the configuration of the heat exchangers and to customer requirements.

Supplied as a kit, it can be assembled quickly and easily, with no need for special tools (cutters or similar), using the assembly instruction sheet and the pre-punched templates.

Particularly well adapted to HVAC applications, its special "double-layered" structure, comprising two different closed cell expanded elastomers (max. thickness 30 mm) makes it suitable for heating and cooling applications.

■ Range

DN 32+ : 10TE020+, 10TE040+ and 10TE080+ models

DN 65 : 10TE125+ and 10TE180+ models

■ Advantages

- Reduced energy losses (example of potential gain on an exchanger with insulation: see graph below)
- Easy to adapt on site to the manufacturing configuration (single or multi-pass, with or without a mounting bracket kit, with or without condensate pan, etc.)
- Easy to adapt to customer requirements (for example: specific mounting brackets provided by the customer, specific circulation of fluids, etc.)
- Low installation cost
- Available from stock
- Lightweight and resilient

■ Technical specifications

Operating temperature limits: -10°C/+130°C.

Thermal conductivity λ: 0.0376 W/mK (average value at 40°C)

Fire resistance: class M1 AFNOR NF P92 501 (outer layer) and class B2 DIN 4102 (inner layer)

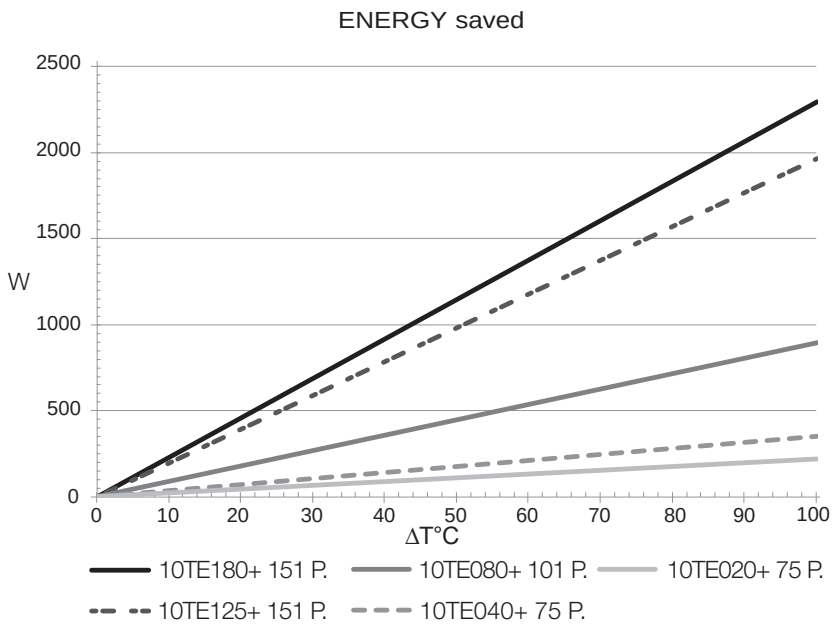

ΔT°C = difference between the average temperature in the exchanger and the room temperature.
W = energy saving (reduction of losses) based on the number of plates.
Example: 10TE180+ 151- plate exchanger
Circuit 1: water 90°C → 70°C
Circuit 2: water 60°C → 80°C
Average temperature in the exchanger:
(90+70+60+80)/4 =75°C
Room temperature: 10°C
ΔT°C = 75 – 10 = 65°C
Energy saved: approximately 1 500 W (1.5 kW)

Note: The results depend to a large extent on the actual operating conditions and the accuracy of assembly.

Cooling insulation (option from DN 100)

■ Description

The insulation system is designed to offer dual performance from a single component. The high-density material used (45 kg/m3) offers effective acoustic and thermal insulation, enabling energy savings in their simplest form, whilst improving overall comfort by significantly reducing the exchanger's sound level.

Furthermore, as part of our desire to offer a quality service, all of our insulation systems are designed to be quick and easy to assemble. They are supplied in kit form, accompanied by detailed assembly instructions.

A metal structure allows the insulation panels to be assembled, forming a box where each panel can be easily removed, independently of the others.

This design allows a quick visual inspection of the inside of the box.

It is possible to remove all the insulating panels or just the lateral panels very quickly, and to open the heat exchanger without having to disassemble the complete structure.

■ Advantages

- Control operations facilitated: the quick attachment system for the panels and the self-supporting structure means that some or all of the panels can be removed to allow a quick visual inspection of the outside of the exchanger or its components (set of plates, frame, connections, etc.).
- Complete exchanger insulation: specially designed to cover the exchanger (excluding the base resting on the ground) and position the insulation as close as possible to the framework (e.g. holes in the insulating panels for fitting the threaded rods on the removable plate side).
- Rapid assembly of the aluminium tube structure thanks to quick lock assemblies.
- High-density insulation combining high thermal and acoustic performance.
- Insulation supplied in a complete kit of simple to use elements, all ready to assemble.
  The assembly instructions enable the kit to be quickly put together by a single operator.
- Acces to the exchangers for maintenance operations (disassembly and assembly) is facilitated: thanks to easy-to-remove lateral panels, the support frame remains in place.
- Insulation designed to enable the condensate drain pan to be installed underneath the stack of plates.
- Accessory which complements the 10TE product range.

■ Technical specifications

- Sandwich of high-density expanded polyurethane panels, pre-punched to allow immediate installation with no additional preparatory work required. Finish on the inner and outer faces: painted aluminium, 0.5 mm thick.
- Foam with no HCFs, CFCs or HFCs.
- Usage limits: maximum temperature for the circulating fluids -10 to +80°C.
- Thermal conductivity of 0.024 W/m°C, measured in accordance with the ISO 8302 standard.
- Acoustic insulation to a maximum of 34 dB.
- Self-supporting frame and modular design: panels assembled with no screws and held in place by the profiled aluminium tube structure.
- Panel thickness: 45 mm.
- Panel attachment: secured by a quick and easy locking system, used to retain or release the polyurethane panels.

Protection for the set of plates (Option from DN 100)

■ Description

The protection system for the set of plates is designed to enclose the entire set of plates.

It is recommended to be used as protection when the temperature of the fluids circulating in the exchanger reaches or exceeds 80°C.

The protection is designed in two sections secured together by bolts, and can be adapted to the dimensions of the exchanger. Each section is formed of a stainless steel panel and a 13 mm-thick section of ceramic fibre insulation.

■ Advantages

- Personnel carrying out maintenance work or manoeuvring close to the exchanger are protected.
- Heat protection: risk of contact burns is prevented.
- Mechanical protection: risk of burns due to splashes of hot fluid is prevented.

■ Technical specifications

- Stainless steel panels (AISI 304).
- Ceramic fibre insulation, 13 mm thick.

■ Diagram

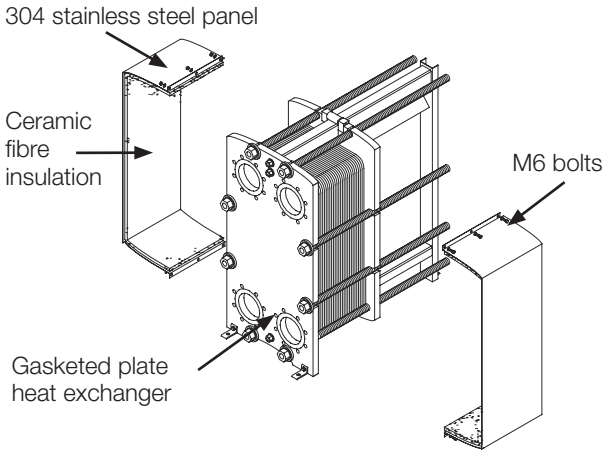

Condensate drain pan (Option for all sizes)

■ Description

The recovery pan is designed to drain not just the water forming condensation on the exchanger, but also any fluid which could come from an accidental leak around the exchanger.

Its use is recommended in all applications which carry a risk of condensation and those which carry a risk of environmental pollution.

The pan is made from stainless steel and is designed to be installed underneath the exchanger.

It is positioned and secured to the exchanger using a system of screws, nuts and washers.

■ Advantages

- Recovery and drainage of all traces of condensation which could form on the external surface of the exchanger.
- Recovery and drainage of any fluids which could accidentally escape from the exchanger: ensuring the safety of personnel and of the environment.

■ Technical specifications

- Stainless steel panels (AISI 304).
- ¾" sleeve (internal tapping) for drainage of the collected fluids.

■ Diagram

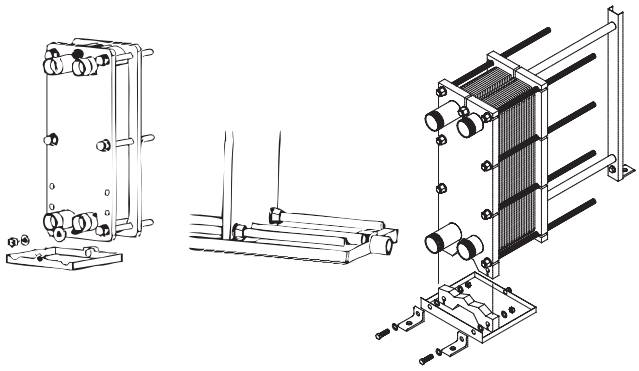

Depending on the size of the exchanger

■ Precautions

Connect the ¾" sleeve to a suitable discharge system.

Carrier

United Technologies

DESIGNING INNOVATIVE SOLUTIONS

AIR CONDITIONING SOLUTIONS AND HEATING SOLUTIONS

SIMPLICITY OR INTELLIGENCE ?

AQUASNAP® WITH GREENSPEED® INTELLIGENCE, BECAUSE YOU SHOULD NOT HAVE TO CHOOSE.

- Enhanced heat pump energy efficiency
- Easy to install and compact
- Advanced control
- Adaptability

Since Willis Carrier developed the world's first modern air conditioning system in 1902, Carrier's engineering teams have been designing advanced solutions for your business. **And because you should not have to choose between simplicity or intelligence**, Carrier incorporated the experience, efficiency and adaptability of the AquaSnap range with the smartest innovative technology: Greenspeed intelligence.

The 30RQM and 30RQP units are the ultimate solutions for industrial and commercial applications where maximum adaptability and high efficiency are required.

www.carrier.com

greenspeed AQUASNAP

Heating

Type		Range	Refrigerant	Cooling capacity, kW	Heating capacity, kW	Page
Air-to-water heat pumps, axial fan						
With scroll or rotary compressors		38AW / 80AW	R-410A	4.2 - 9	5 - 15	358
		30AWH 004-015	R-410A	3 - 16	4 - 15	376
		80HMA Comfort module				386
		61AF 014-019	R-410A	-	14 - 20	396
		61AF 022-105	R-410A	-	21 - 102	406
	NEW	30RQV 017-021	R-410A	15 - 18	17 - 21	422
		30RQ 017-040	R-410A	16 - 40	16 - 40	432
	NEW	30PH / 30PHC	R-410A	17 - 36	21- 43	442
		30RQS 039-160	R-410A	37 - 147	42- 159	466
		30RQSY 039-160	R-410A	37 - 147	42 - 159	480
		30RQM / 30RQP 160-520	R-410A	160 - 510	170 - 540	498
Water-to-water heat pumps						
With scroll compressors		61WG 020-090	R-410A	-	29 - 117	514
With screw compressors		30XWH 254-1762	R-134a	273 - 1756	317 - 1969	536
		30XWHV 580-1710	R-134a	587 -1 741	648 - 1932	558
	NEW	30XWHP-ZE / 30XWHV-ZE	R1234ze	-	320 - 1570	570
	NEW	61XW-ZE	R1234ze	-	400 - 1900 (LWT/85°C)	574

38AW / 80AW

Nominal Heating capacity 5–15.0 kW
Nominal Cooling capacity 4.2–15.8 kW

XP ENERGY INVERTER AIR TO WATER split

Inverter-driven outdoor unit

Compact comfort module

System energy efficiency

Easy heating solution

The reversible XP Energy air-to-water split system heat pumps with built-in inverter technology are designed for residential and light commercial applications. They offer excellent energy efficiency values, exceptionally quiet operation and meet the most stringent operating temperature demands.

The units integrate the latest technological innovations: Non-ozone depleting refrigerant R-410A, DC inverter twin-rotary compressors, low-noise fan and microprocessor control.

With exceptional energy efficiency values, the inverter air-to-water split-system heat pumps qualify for local tax reductions and incentive plans in all the EU countries.

The 38AW/80AW systems are specifically designed for ease-of-installation and service and underline Carrier's reputation for highest product quality and reliability.

For added flexibility, the XP Energy systems are available in heating only or reversible versions, to suit the demand.

The XP Energy heat pump systems can be used with a wide choice of Carrier terminal fan coil units - cassettes, low, medium and high-pressure satellite units, console units, under-ceiling units and high-wall units.

Physical data

EUROVENT CERTIFIED PERFORMANCE
www.eurovent-certification.com

38AW/80AW

Outdoor unit (heat pump)				**38AW 050H7**	**38AW 065H7**	**38AW 090H7**	**38AW 115H7**	**38AW 120H9**	**38AW 150H9**
Indoor unit (comfort module)				**80AWH 065**	**80AWH 065**	**80AWH 115**	**80AWH 115**	**80AWH 150**	**80AWH 150**
Cooling (80AWX only)									
Full load performances*	**C1**	**Nominal capacity**	kW	3.57	4.73	5.95	6.80	10.30	12.60
	C1	EER	kW/kW	2.60	2.60	3.07	2.88	3.41	3.17
	C1	Eurovent class cooling		D	D	B	C	A	A
	C2	**Nominal capacity**	kW	5.10	6.55	7.88	9.00	13.50	15.79
	C2	EER	kW/kW	3.40	3.40	4.05	3.80	4.74	4.24
	C2	Eurovent class cooling		D	D	A	A	A	A
Seasonal efficiency*		ESEER	kW/kW	3.71	3.71	4.45	4.37	4.56	4.79
Heating (80AWX and 80AWH)									
Full load performances*	**H1**	**Nominal capacity**	kW	5.01	6.55	9.27	11.50	12.00	15.01
	H1	COP	kW/kW	4.15	4.15	4.48	4.10	4.65	4.30
	H1	Eurovent class cooling		A	A	A	A	A	A
	H2	**Nominal capacity**	kW	4.37	5.70	8.70	11.30	11.20	14.02
	H2	COP	kW/kW	3.41	3.34	3.45	3.32	3.70	3.40
	H2	Eurovent class cooling		A	A	A	A	A	A
	H3	**Nominal capacity**	kW	4.25	5.52	7.88	10.95	11.48	11.91
	H3	COP	kW/kW	2.65	2.86	2.90	2.79	3.12	3.10
Seasonal efficiency (80AWX only)**	H3	SCOP	kW/kW	3.00	2.98	2.99	2.94	3.45	3.29
	H3	ηs heat	%	117	116	117	115	135	128
	H3	Prated	kW	1.90	2.16	7.60	8.75	8.37	9.38
	H3	Annual energy consumption	kWh	1303	1494	5245	6143	5004	5897
	H3	Energy efficiency class		A+	A+	A+	A+	A++	A++
Seasonal efficiency (80AWH only)**	H3	SCOP	kW/kW	2.81	2.81	2.94	2.90	3.39	3.24
	H3	ηs heat	%	110	110	115	113	133	127
	H3	Prated	kW	1.90	2.16	7.60	8.75	8.37	9.38
	H3	Annual energy consumption	kWh	1303	1494	5245	6143	5004	5897
	H3	Energy efficiency class		A+	A+	A+	A+	A++	A++

* In accordance with standard EN14511-3:2013
** In accordance with standard EN14825:2013, average climate
C1 Cooling mode conditions: evaporator water entering/leaving temperature 12°C/7°C, outside air temperature 35°C, evaporator fooling factor 0 m² K/W
C2 Cooling mode conditions: evaporator water entering/leaving temperature 23°C/18°C, outside air temperature 35°C, evaporator fooling factor 0 m² K/W
H1 Heating mode conditions: Water heat exchanger water entering/leaving temperature 30°C/35°C, fouling factor 0 m² K/W. Outside air temperature 7°C db/6°C wb,
H2 Heating mode conditions: Water heat exchanger water entering/leaving temperature 40°C/45°C, fouling factor 0 m² K/W. Outside air temperature 7°C db/6°C wb,
H3 Heating mode conditions: Water heat exchanger water entering/leaving temperature 47°C/55°C, fouling factor 0 m² K/W. Outside air temperature 7°C db/6°C wb,
(1) In dB ref=10^{-12} W, (A) weighting. Declared dualnumber noise emission values in accordance with ISO 4871 (with an associated uncertainty of +/-3dB(A)). Measured in accordance with ISO 9614-1.
(2) In dB ref 20µPa, (A) weighting. Declared dualnumber noise emission values in accordance with ISO 4871 (with an associated uncertainty of +/-3dB(A)). For information, calculated from the sound power level Lw(A).
(3) Weights are guideline only. Refer to the unit nameplate.

Eurovent certified data

Eurovent certified data

Physical data

38AW/80AW

Outdoor unit (heat pump)		38AW 050H7	38AW 065H7	38AW 090H7	38AW 115H7	38AW 120H9	38AW 150H9
Indoor unit (comfort module)		**80AWH 065**	**80AWH 065**	**80AWH 115**	**80AWH 115**	**80AWH 150**	**80AWH 150**
80AW							
Sound levels							
Sound power level(1) (H3)	dB(A)	40.9	40.9	40.9	40.9	40.9	40.9
Sound power level(1) (C1)	dB(A)	40.9	40.9	40.9	40.9	40.9	40.9
Dimension, H x L x D	mm	800 x 450 x 320	800 x 450 x 320	800 x 450 x 320	800 x 450 x 320	800 x 450 x 320	800 x 450 x 320
Operating weight(3)	kg	48	48	50	50	52	52
Hydronic module							
Pump		Variable speed circulator					
Expansion tank volume	l	8	8	8	8	8	8
Availabale static pressure (C1)	kPa	70	68	68	65	55	41
Availabale static pressure (H1)	kPa	66	60	54	40	45	25
Availabale static pressure (H2)	kPa	68	64	57	41	50	31
Min. system water content	l	21	28	42	42	42	49
Max. water-side operating pressure	kPa	300	300	300	300	300	300
Water connections with or without hydronic module							
Diameter	inch	1 M	1 M	1 M	1 M	1 M	1 M
Outside tube diameter	mm	25.4 M	25.4 M	25.4 M	25.4 M	25.4 M	25.4 M
Connections, Liquid / Gas side	inch	3/8 - 5/8	3/8 - 5/8	3/8 - 5/8	3/8 - 5/8	3/8 - 5/8	3/8 - 5/8
Chassis paint colour		White					

* In accordance with standard EN14511-3:2013
** In accordance with standard EN14825:2013, average climate
C1 Cooling mode conditions: evaporator water entering/leaving temperature 12°C/7°C, outside air temperature 35°C, evaporator fooling factor 0 m^2 K/W
C2 Cooling mode conditions: evaporator water entering/leaving temperature 23°C/18°C, outside air temperature 35°C, evaporator fooling factor 0 m^2 K/W
H1 Heating mode conditions: Water heat exchanger water entering/leaving temperature 30°C/35°C, fouling factor 0 m^2 K/W. Outside air temperature 7°C db/6°C wb,
H2 Heating mode conditions: Water heat exchanger water entering/leaving temperature 40°C/45°C, fouling factor 0 m^2 K/W. Outside air temperature 7°C db/6°C wb,
H3 Heating mode conditions: Water heat exchanger water entering/leaving temperature 47°C/55°C, fouling factor 0 m^2 K/W. Outside air temperature 7°C db/6°C wb,
(1) In dB ref=10^{-12} W, (A) weighting. Declared dualnumber noise emission values in accordance with ISO 4871 (with an associated uncertainty of +/-3dB(A)). Measured in accordance with ISO 9614-1.
(2) In dB ref 20µPa, (A) weighting. Declared dualnumber noise emission values in accordance with ISO 4871 (with an associated uncertainty of +/-3dB(A)). For information, calculated from the sound power level Lw(A).
(3) Weights are guideline only. Refer to the unit nameplate.

Physical data

38AW/80AW

Outdoor unit (heat pump)		38AW 050H7	38AW 065H7	38AW 090H7	38AW 115H7	38AW 120H9	38AW 150H9
Indoor unit (comfort module)		**80AWH 065**	**80AWH 065**	**80AWH 115**	**80AWH 115**	**80AWH 150**	**80AWH 150**
38AW							
Sound levels							
Sound power level(1) (H3)	dB(A)	64	65	69	70	68	68
Sound pressure level at 4m(2) (H3)	dB(A)	44	45	49	50	48	48
Sound power level(1) (C1)	dB(A)	64	65	68	70	68	68
Sound pressure level at 4 m(2) (C1)	dB(A)	44	45	48	50	48	48
Dimension, H x L x D	mm	690 x 900 x 320	820 x 900 x 320	1360 x 900 x 320	1360 x 900 x 320	1360 x 900 x 320	1360 x 900 x 320
Operating weight(3)	kg	49	51	88	88	100	100
Refrigerant		R410A					
Circuit charge(3)	kg	1.17	1.36	2.1	2.1	3.9	3.9
	CO_2 eq.	2.4	2.8	4.4	4.4	8.1	8.1
Compressors		DC Inverter Twin-Rotary					
Fans		Variable speed 3 blades fan					
Quantity		1	1	2	2	2	2
Air flow	m^3/h	2620	2820	5970	6360	5770	5770
Maximum connection pipe length	m	50	30	70	70	70	70
Maximum height difference	m	30	30	30	30	30	30
Precharged length	m	20	20	20	30	30	30
Connections, Liquid / Gas side	inch	1/4 - 1/2	3/8 - 5/8	3/8 - 5/8	3/8 - 5/8	3/8 - 5/8	3/8 - 5/8
Chassis paint colour		Beige					

* In accordance with standard EN14511-3:2013
** In accordance with standard EN14825:2013, average climate
C1 Cooling mode conditions: evaporator water entering/leaving temperature 12°C/7°C, outside air temperature 35°C, evaporator fooling factor 0 m^2 K/W
C2 Cooling mode conditions: evaporator water entering/leaving temperature 23°C/18°C, outside air temperature 35°C, evaporator fooling factor 0 m^2 K/W
H1 Heating mode conditions: Water heat exchanger water entering/leaving temperature 30°C/35°C, fouling factor 0 m^2 K/W. Outside air temperature 7°C db/6°C wb,
H2 Heating mode conditions: Water heat exchanger water entering/leaving temperature 40°C/45°C, fouling factor 0 m^2 K/W. Outside air temperature 7°C db/6°C wb,
H3 Heating mode conditions: Water heat exchanger water entering/leaving temperature 47°C/55°C, fouling factor 0 m^2 K/W. Outside air temperature 7°C db/6°C wb,
(1) In dB ref=10^{-12} W, (A) weighting. Declared dualnumber noise emission values in accordance with ISO 4871 (with an associated uncertainty of +/-3dB(A)). Measured in accordance with ISO 9614-1.
(2) In dB ref 20µPa, (A) weighting. Declared dualnumber noise emission values in accordance with ISO 4871 (with an associated uncertainty of +/-3dB(A)). For information, calculated from the sound power level Lw(A).
(3) Weights are guideline only. Refer to the unit nameplate.

Physical data

Indoor unit for 38AW 050H7 and 38AW 065H7		80AWX 065M0	80AWX 065M3	80AWX 065M6	80AWX 065T6	80AWX 065M0	80AWX 065M3	80AWX 065M6	80AWX 065T6
Number of comfort zones		1	1	1	1	1	1	1	1
Electric heater element	kW	0	3	6	6	0	3	6	6
Heating only		No	No	No	No	Yes	Yes	Yes	Yes
Heating and cooling		Yes	Yes	Yes	Yes	No	No	No	No
Connection of backup boiler		Yes	No	No	No	Yes	No	No	No
Power supply	V-ph-Hz	230-1-50	230-1-50	230-1-50	400-3N-50	230-1-50	230-1-50	230-1-50	400-3N-50

Indoor unit for 38AW 090H7 and 38AW 115H7		80AWX 115M0	80AWX 115M3	80AWX 115M6	80AWX 115T6	80AWX 115T9	80AWH 115M0	80AWH 115M3	80AWH 115M6	80AWH 115T6	80AWH 115T9
Number of comfort zones		1	1	1	1	1	1	1	1	1	1
Electric heater element	kW	0	3	6	6	9	0	3	6	6	9
Heating only		No	No	No	No	No	Yes	Yes	Yes	Yes	Yes
Heating and cooling		Yes	Yes	Yes	Yes	Yes	No	No	No	No	No
Connection of backup boiler		Yes	No	No	No	No	Yes	No	No	No	No
Power supply	V-ph-Hz	230-1-50	230-1-50	230-1-50	400-3N-50	400-3N-50	230-1-50	230-1-50	230-1-50	400-3N-50	400-3N-50

Indoor unit for 38AW 120H9 and 38AW 150H9		80AWX 150M0	80AWX 150T6	80AWX 150T9	80AWH 150M0	80AWH 150T6	80AWH 150T9
Number of comfort zones		1	1	1	1	1	1
Electric heater element	kW	0	6	9	0	6	9
Heating only		No	No	No	Yes	Yes	Yes
Heating and cooling		Yes	Yes	Yes	No	No	No
Connection of backup boiler		Yes	No	No	Yes	No	No
Power supply	V-ph-Hz	230-1-50	400-3N-50	400-3N-50	230-1-50	400-3N-50	400-3N-50

Electrical data

Outdoor unit		38AW 050	38AW 065	38AW 090	38AW 115	38AW 120	38AW 150
Power supply	V-ph-Hz	230-1-50	230-1-50	230-1-50	230-1-50	400-3N-50	400-3N-50
Voltage range	V-ph-Hz	198-264	198-264	198-264	198-264	376-424	376-424
Full load current	A	12	12	23	23	15.4	15.4
Fuse rating*	A	16	16	25	25	16	16
Operating current	A	5.3	6.91	9.43	12.22	6.45	8.72
Power consumption	W	1220	1590	2170	2810	2580	3490
Main power wire size	mm^2	2.5	2.5	4	4	2.5	2.5
Power factor	%	0.95	0.95	0.95	0.95	0.95	0.95

* Time delay fuse

Indoor unit (Comfort module)		80AW 065			
		M0	M3	M6	T6
Outdoor units		38AW 050H7/ 38AW 065H7			
Power supply	V-ph-Hz	230-1-50	230-1-50	230-1-50	400-3N-50
Voltage range	V-ph-Hz	207-253	207-253	207-253	360-440
Power input	kW	-	3	6	6
Operating current					
L1	A	-	13.0	26	8.7
L2	A	-	-	-	8.7
L3	A	-	-	-	8.7
N	A	-	13.0	26	-
Power factor	%	1	1	1	1
Indoor unit power supply and communication cable - H07 RN-F	mm^2	2G x 1	2G x 1	2G x 1	2G x 1
Backup heater power supply cable - H07 RN-F	mm^2	-	3G x 4	3G x 6	5G x 2.5
User interface cable (additional or remote) - FROH2R	mm^2	4 x 0.75	4 x 0.75	4 x 0.75	4 x 0.75
Booster heater power supply cable - H05VV-F	mm^2	3G x 2.5	3G x 2.5	3G x 2.5	3G x 2.5
DHW booster heater activation cable - FROH2R	mm^2	2 x 1	2 x 1	2 x 1	2 x 1
DHW hot water sensor cable - FROH2R	mm^2	2 x 0.5	2 x 0.5	2 x 0.5	2 x 0.5
Remote outdoor sensor cable - FROH2R	mm^2	2 x 0.5	2 x 0.5	2 x 0.5	2 x 0.5

Physical data

Indoor unit (Comfort module)		80AW 115				
		M0	M3	M6	T6	T9
Outdoor units		38AW 090H7/38AW 115H7				
Power supply	V-ph-Hz	230-1-50	230-1-50	230-1-50	400-3N-50	400-3N-50
Voltage range	V-ph-Hz	207-253	207-253	207-253	360-440	360-440
Power input	kW	-	3	6	6	9
Operating current						
L1	A	-	13.0	26	8.7	13.0
L2	A	-	-	-	8.7	13.0
L3	A	-	-	-	8.7	13.0
N	A	-	13.0	26	-	-
Power factor	%	1	1	1	1	1
Indoor unit power supply and communication cable - H07 RN-F	mm^2	2G x 1	2G x 1	2G x 1	2G x 1	2G x 1
Backup heater power supply cable - H07 RN-F	mm^2	-	3G x 4	3G x 6	5G x 2.5	5G x 4
User interface cable (additional or remote) - FROH2R	mm^2	4 x 0.75	4 x 0.75	4 x 0.75	4 x 0.75	4 x 0.75
Booster heater power supply cable - H05VV-F	mm^2	3G x 2.5	3G x 2.5	3G x 2.5	3G x 2.5	3G x 2.5
DHW booster heater activation cable - FROH2R	mm^2	2 x 1	2 x 1	2 x 1	2 x 1	2 x 1
DHW hot water sensor cable - FROH2R	mm^2	2 x 0.5	2 x 0.5	2 x 0.5	2 x 0.5	2 x 0.5
Remote outdoor sensor cable - FROH2R	mm^2	2 x 0.5	2 x 0.5	2 x 0.5	2 x 0.5	2 x 0.5

Indoor unit (Comfort module)		80AW 150		
		M0	T6	T9
Outdoor units		38AW 120H9/38AW 150H9		
Power supply	V-ph-Hz	230-1-50	400-3N-50	400-3N-50
Voltage range	V-ph-Hz	207-253	376-424	376-424
Power input	kW	-	6	9
Operating current				
L1	A	-	8.7	13.0
L2	A	-	8.7	13.0
L3	A	-	8.7	13.0
N	A	-	-	-
Power factor	%	1	1	1
Indoor unit power supply and communication cable - H07 RN-F	mm^2	2G x 1	2G x 1	2G x 1
Backup heater power supply cable - H07 RN-F	mm^2	-	5G x 2.5	5G x 4
User interface cable (additional or remote) - FROH2R	mm^2	4 x 0.75	4 x 0.75	4 x 0.75
Booster heater power supply cable - H05VV-F	mm^2	3G x 2.5	3G x 2.5	3G x 2.5
DHW booster heater activation cable - FROH2R	mm^2	2 x 1	2 x 1	2 x 1
DHW hot water sensor cable - FROH2R	mm^2	2 x 0.5	2 x 0.5	2 x 0.5
Remote outdoor sensor cable - FROH2R	mm^2	2 x 0.5	2 x 0.5	2 x 0.5

Type key

Outdoor unit

38AW 050 H7

- **38AW**
  - Air-cooled condensing unit
  - Air-to water unit
- **050**
  - 050 – Outdoor unit with nominal size 5.0 kW
  - 065 – Outdoor unit with nominal size 6.5 kW
  - 090 – Outdoor unit with nominal size 9.0 kW
  - 115 – Outdoor unit with nominal size 11.5 kW
  - 120 – Outdoor unit with nominal size 12.0 kW
  - 150 – Outdoor unit with nominal size 15.0 kW
- **H7**
  - H9 Three-phase 3 x 400 V/50 Hz + neutral
  - H7 Single-phase 1 x 230 V/50 Hz

Indoor unit

80AW X 065 M 6 - - B

- **80AW**
  - Product range
- **X**
  - X – Heating and cooling
  - H – Heating only
- **065**
  - Heating capacity, kW
- **M**
  - Power supply
  - M = single-phase
  - T = three-phase + neutral
- **6**
  - Electric heater capacity, kW
  - 0 = boiler backup
- **-**
- **-**
- **B**
  - Revision status

Combination table, outdoor and indoor units

Outdoor unit		Indoor unit	
38AW 050H7	5 kW nominal capacity	**80AWX 065M0**	Reversible, 1 zone, max. heating capacity 6.5 kW for boiler backup
38AW 065H7	6.5 kW nominal capacity	**80AWX 065M3**	Reversible, 1 zone, max. heating capacity 6.5 kW with 3 kW 1-ph electric heater backup
		80AWX 065M6	Reversible, 1 zone, max. heating capacity 6.5 kW with 6 kW 1-ph electric heater backup
		80AWX 065T6	Reversible, 1 zone, max. heating capacity 6.5 kW with 6 kW 3-ph electric heater backup
		80AWH 065M0	Heating only, 1 zone, max. heating capacity 6.5 kW for boiler backup
		80AWH 065M3	Heating only, 1 zone, max. heating capacity 6.5 kW with 3 kW 1-ph electric heater backup
		80AWH 065M6	Heating only, 1 zone, max. heating capacity 6.5 kW with 6 kW 1-ph electric heater backup
		80AWH 065T6	Heating only, 1 zone, max. heating capacity 6.5 kW with 6 kW 3-ph electric heater backup
38AW 090H7	9 kW nominal capacity	**80AWX 115M0**	Reversible, 1 zone, max. heating capacity 11.5 kW for boiler backup
38AW 115H7	11.5 kW nominal capacity	**80AWX 115M3**	Reversible, 1 zone, max. heating capacity 11.5 kW with 3 kW 1-ph electric heater backup
		80AWX 115M6	Reversible, 1 zone, max. heating capacity 11.5 kW with 6 kW 1-ph electric heater backup
		80AWX 115T6	Reversible, 1 zone, max. heating capacity 11.5 kW with 6 kW 3-ph electric heater backup
		80AWX 115T9	Reversible, 1 zone, max. heating capacity 11.5 kW with 9 kW 3-ph electric heater backup
		80AWH 115M0	Heating only, 1 zone, max. heating capacity 11.5 kW for boiler backup
		80AWH 115M3	Heating only, 1 zone, max. heating capacity 11.5 kW with 3 kW 1-ph electric heater backup
		80AWH 115M6	Heating only, 1 zone, max. heating capacity 11.5 kW with 6 kW 1-ph electric heater backup
		80AWH 115T6	Heating only, 1 zone, max. heating capacity 11.5 kW with 6 kW 3-ph electric heater backup
		80AWH 115T9	Heating only, 1 zone, max. heating capacity 11.5 kW with 9 kW 3-ph electric heater backup
38AW 120H9	12 kW nominal capacity	**80AWX 150M0**	Reversible, 1 zone, max. heating capacity 15 kW for boiler backup
38AW 150H9	15 kW nominal capacity	**80AWX 150T6**	Reversible, 1 zone, max. heating capacity 15 kW with 6 kW 3-ph electric heater backup
		80AWX 150T9	Reversible, 1 zone, max. heating capacity 15 kW with 9 kW 3-ph electric heater backup
		80AWH 150M0	Heating only, 1 zone, max. heating capacity 15 kW for boiler backup
		80AWH 150T6	Heating only, 1 zone, max. heating capacity 15 kW with 6 kW 3-ph electric heater backup
		80AWH 150T9	Heating only, 1 zone, max. heating capacity 15 kW with 9 kW 3-ph electric heater backup

Accessories

Part No.	Description	Advantages	Use 38AW/80AW
33AW-CS2	Additional user interface	Monitors two independent comfort zones or used together with comfort module interface	80AW 9025 & 80AWX or H
33AW-CB01	Communication kit	Necessary when adding a user interface and keeping the one on comfort module	80AWX or H
33AW-RAS02	Remote outdoor sensor	Positioned in the right place, the OAT sensor maximises comfort compared to using the condensing unit OAT sensor.	80AWX or H
33AW-RRS01	Room temperature sensor	Monitors indoor climate if user interface is left on indoor unit, or if two zones are covered and only one user interface is installed.	80AW 9025 & 80AWX or H
60STS020E03	Domestic hot water tank, 1 coil - 200 l	Storage, 200 l of domestic hot water	80AW 9025 & 80AWX or H
60STS030E03	Domestic hot water tank, 1 coil - 300 l	Storage, 300 l of domestic hot water	80AW 9025 & 80AWX or H
60STD020E03	Domestic hot water tank, 2 coils - 200 l	Storage, 200 l of domestic hot water with thermal solar panel connection	80AW 9025 & 80AWX or H
60STD030E03	Domestic hot water tank, 2 coils - 300 l	Storage, 300 l of domestic hot water with thermal solar panel connection	80AW 9025 & 80AWX or H
80AW9017	CDU rubber vibration isolators	Reduce the noise and vibration of the unit.	38AW
80AW9023	Domestic hot-water three-way valve and actuator	Necessary to connect domestic hot water tank.	80AWX or H
80AW9024	Thermal cut-out, floor heating	Necessary when connecting under-floor heating zone	80AWX or H
80AW9025	Two-zone kit	Allows independent control of two comfort zones	80AWX or H
80AW9026	Piping kit to install domestic hot-water valve and actuator (80AW9023) inside the unit	Specific DHW piping kit for the installation, used together with 80AW9025	80AW 9025 & 80AWX or H
80AW9027	Cover panel to install two-zone kit (80AW9025) detached from comfort module	Hides piping and connections, if two-zone kit is installed remotely from the main comfort module.	80AW 9025 & 80AWX or H
80AW9028	Additional 3-way valve kit	Possibility to have a 3-way valve also on the 2nd zone circuit	80AW 9025 & 80AWX or H

Features and advantages

Features

- Wide operating range in both heating and cooling mode offers high performance in a wide temperature range.
- DC inverter twin-rotary compressors with Pulse Amplitude Modulation (PAM) and Pulse Width Modulation (PWM) provide enhanced reliability, low energy consumption and smooth vibration-free operation under all operating conditions.
- Variable-speed fans with an innovative patented fan blade shape ensure improved air distribution at exceptionally low noise levels.
- Pre-set or customised selection of the appropriate climate curve for stable output capacity to match the heat load.
- Output to link and integrate the unit with the existing heat sources offers a dual-energy approach, increased savings and optimum comfort in all weather conditions.
- Able to control two independent comfort zones with a two-zone kit added to the main comfort module.
- Leaving water temperature up to 60 °C for radiator and domestic hot water applications, making hot water readily available.

Ecodesign is the European Directive that sets mandatory requirements for Energy related Products (ErP) to improve their energy efficiency. Carrier supports initiatives to reduce the environmental impact of its products.

Adapted to your needs

- Heating only or reversible comfort module
- Backup heating, either electrical (single-energy applications) or gas boiler (dual-energy applications)
- Comfort is ensured via the user interface and the possibility of integrating two leaving water temperature zones.

Advanced technology

- Electronic system management: several sensors placed in key positions in the refrigerant circuit electronically detect the operational system status. Two micro-controllers receive the input from the sensors, manage them using advanced control algorithms and optimise the refrigerant flow and the functioning of all the core components - the compressor, fan motors and the pulse modulation valve.
- The pulse modulation valve, a bi-flow electronic expansion device, optimises the refrigerant amount in the circuit and the superheat, and prevents the refrigerant migration back into the compressor. This device further enhances high system performance and reliability.
- The air management system, which consists of a propeller fan, orifice and an air discharge grille, guarantees minimised noise levels.

Advanced performance

- The XP Energy heat pump systems have an extremely high energy efficiency ratio in both cooling and heating mode, ensuring significant energy savings. Large and efficient coils and optimised circuiting feature ensure that all the combinations meet the European tax rebate efficiency targets. Efficiency at part-load conditions (seasonal energy efficiency) reaches the highest level in the industry.
- Year-round comfort: The advanced technology used in the new XP Energy heat pump condensing units provides optimised comfort levels for the end users, both in terms of water temperature control and silent operation. The desired temperature is quickly reached and effectively maintained without fluctuations. The XP Energy offers optimised individual comfort levels - both in winter and in summer.
- Wide temperature operating range: XP Energy heat pumps can operate efficiently in extreme temperature conditions. For end user comfort the units operate down to -20 °C outdoor temperature in heating mode, and in the summer, they produce hot water up to 60 °C at up to 30 °C outside temperature for domestic hot water applications.

Environmentally balanced

- Non-ozone depleting R-410A refrigerant:
  - Chlorine-free refrigerant of the HFC group with zero ozone depletion potential
  - High-density refrigerant, therefore less refrigerant required
  - Very efficient, therefore gives an increased energy efficiency ratio (EER)
- The new packaging ensures high protection during transport and handling and is 100% recyclable.

Fast and simple installation and service

- Easy access to all internal components: Unscrew only three screws to remove the complete front panel to access the refrigerant piping connections, control box and electrical connections, as well as the compressor and other key parts.
- Advanced circuit design and component selection has resulted in a compact unit with an exceptionally small foot-print that is easy to transport through narrow doors.
- Reduced weight and a handle on the unit panels to facilitate transport.
- No additional buffer tank required. This simplies and speeds up the installation process.
- 3-bar pressure relief valve as standard
- 8-litre internal expansion tank
- High-temperature refrigerant protection
- Water flow switch to ensure that the circuits contain enough water to operate correctly.
- Various power cable outlet options: Pre-punched holes in the cabinet panels permit cable exit on the side, front or rear.
- Dealer service tool connection kit includes the software and connections to monitor the operating parameters from a personal computer, giving an easy-to-read display with visual graphs and statistics indicators.
- All 80AW units are equipped with 1 inch gas MPT water connections.
- The 80AW comfort module reduces space requirements and simplifies the installation. Only the power and the water supply and return piping need to be connected.
- Condensate drain piping connection
- Specially shaped anchorage feet ensure correct and safe fixing of the unit.
- The programmable NUI thermostat periodically runs system checks to monitor and assess the unit operating parameters. If a problem occurs, troubleshooting fault codes and messages help the service technician to identify the fault.

DC inverter twin-rotary compressor

- Advanced technology provides maximum energy-efficiency with high capacity available at peak conditions and optimised efficiency at low and mid compressor speeds. The XP Energy heat pump DC inverter uses Intelligent Power Drive Unit (IPDU) hybrid inverter technology, combining two electronic management logics: Pulse Amplitude Modulation (PAM) and Pulse Width Modulation (PWM) for optimised compressor operation in all conditions, minimised temperature fluctuations, and provides perfect individual comfort control with significantly reduced energy consumption:
  - PAM: Pulse Amplitude Modulation of the direct current controls the compressor at maximum load conditions (start-up and peak load), and increases the voltage at fixed frequency. The compressor works at high speed to rapidly achieve the desired temperature.
  - PWM: Pulse Width Modulation of the direct current controls the compressor at partial load conditions, and adjusts the frequency at fixed voltage. The compressor speed is fine-tuned and the system provides high-level comfort (no temperature fluctuations) at exceptionally efficient working conditions.
- Compressor frequency is increased continuously up to the maximum level. This ensures that there are no current draw peaks in the start-up phase and safe connection to a single-phase power supply even in large-capacity systems. The maximum operating current of XP Energy systems is below 12 A (systems up to 6.5 kW) and below 23 A for larger systems (up to 11.5 kW). Inverter ramp-up speed makes soft starts unnecessary and ensures immediate maximum power.
- The two rotary compression cylinders, offset from each other by 180°, and the DC brushless motor with the shaft in perfect balance ensure reduced vibration and noise, even at very low operating speeds. This results in an extremely wide range between minimum and maximum capacity with continuous operation, guaranteeing that the system is always optimised and provides maximum comfort at exceptionally high efficiency levels.
- Twin-rotary cylinders, low vibrations and low load to the shaft ensure highest compressor reliability and a long trouble-free operating life.
- All DC brushless twin-rotary compressors are equipped with crankcase heaters as standard.
- A double compressor shield for acoustic insulation further reduces noise levels.

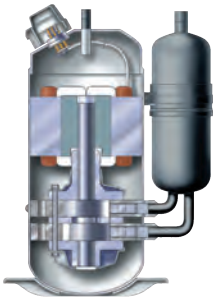

Superior reliability

- Exceptional endurance tests:
  - Third-party testing and certification: All the performances are certified by Eurovent and unit safety is certified by IMQ.
  - All the units are tested at various stages on the production line for circuit leakage, electrical compliance, water and refrigerant pressures.
  - End-of-line test of all unit operating parameters
  - Corrosion resistance test
  - Accelerated ageing test on critical components and complete assembled units, simulating thousands of hours of continuous operation.
  - Packaging crash test to ensure that the units are adequately protected against accidental shocks
  - Extensive field and site testing.

Corrosion-resistant casing

Economical operation

- Increased energy efficiency at part load:
  - The exceptionally high energy efficiency of the XP Energy heat pumps is the result of a long qualification and optimisation process.
  - Use of ambient air as primary source of energy in domestic heating applications significantly reduces the overall energy consumption and minimises CO_2 emissions.
  - Night mode operation at reduced compressor speed, results in low-noise operation and a significant reduction in energy consumption.
  - Easy-to-set and economical silent mode, reduces the compressor speed.
  - R-410A refrigerant is easier to use than other refrigerant blends.

GMC board

- The new GMC controller is specifically developed for the XP Energy inverter heat pumps, and incorporates new control algorithms. It features customised or pre-defined climate curves, domestic hot water control, a night-time noise reduction function, a defrost/alarm output signal, an external heat source, a pump block prevention function, freeze protection and compressor operation management.

New comfort module

- With its enhanced aesthetics and compactness, combined with new features and options, the new XP Energy sets new standards in energy savings and comfort. Using the two-zone kit, two separate terminal units or two independent comfort zones can be closely monitored. Domestic hot water production is made easy and can be interfaced with solar thermal panels.

Two-zone kit

- The new design facilitates the installation process and makes two independent comfort zones, which are easy to control. This kit includes a hydronic disconnection collector, the necessary circulating pumps and modulating valve. Installed together with the domestic hot water tank, the two-zone kit can integrate all accessories, such as the diverting valve and T-connection.

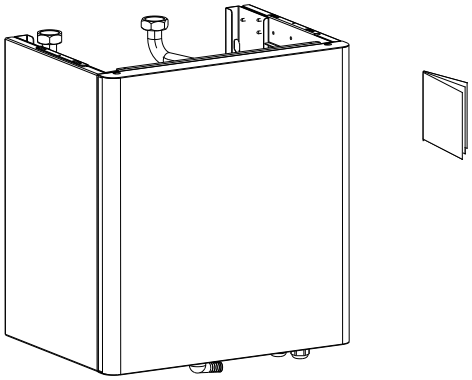

Domestic hot water tank

- The tank is of 200 or 300 litres, with or without connection to a solar thermal panel. Built-in electric heater backup and anti-legionnella protection, controlled by the comfort module, make domestic hot water readily available, safe and energy-efficient.

Controls

New user interface

- The XP Energy has an easy-to-use user interface with easy-to-read LCD screen. It provides enhanced control capability for maximised performance, reliability and indoor comfort and has extended programming features such as weekly scheduling. The sleek contemporary design blends in with any room decor.

Operating limits and operating ranges

	Cooling mode
Maximum outside temperature	46 °C
Maximum leaving water temperature	18 °C
Minimum outside temperature	0 °C
Minimum leaving water temperature	4 °C

	Heating mode
Maximum outside temperature	30 °C
Maximum leaving water temperature	60 °C
Minimum outside temperature	-20 °C
Minimum leaving water temperature	20 °C

Operating range, cooling mode

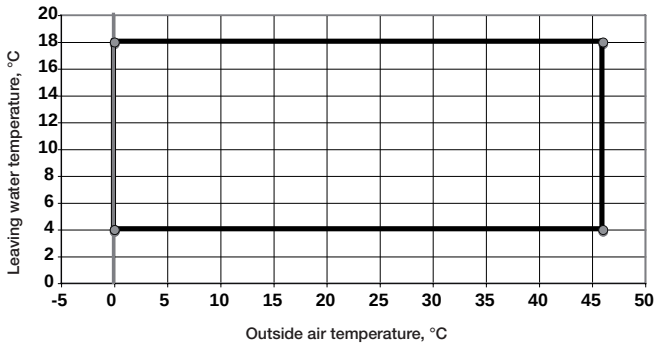

Operating range, heating mode

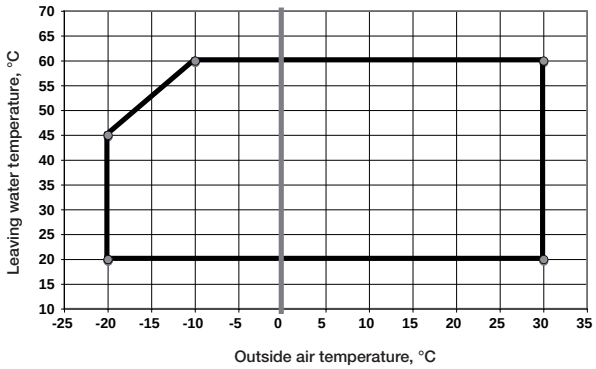

Available static pressure, single zone

80AW 065

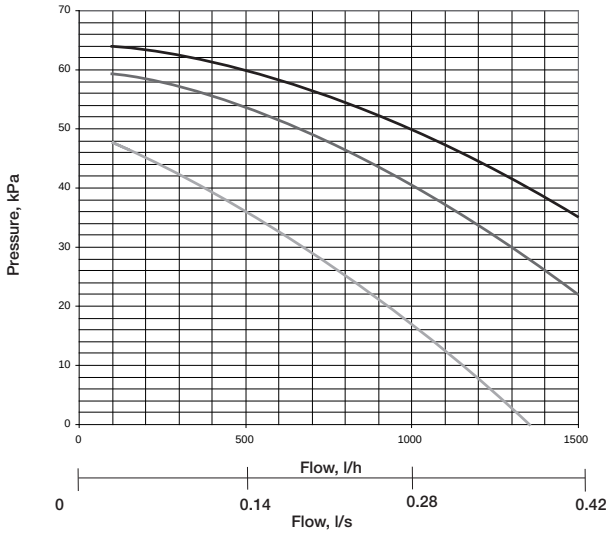

High speed
Medium speed
Low speed

80AW 115

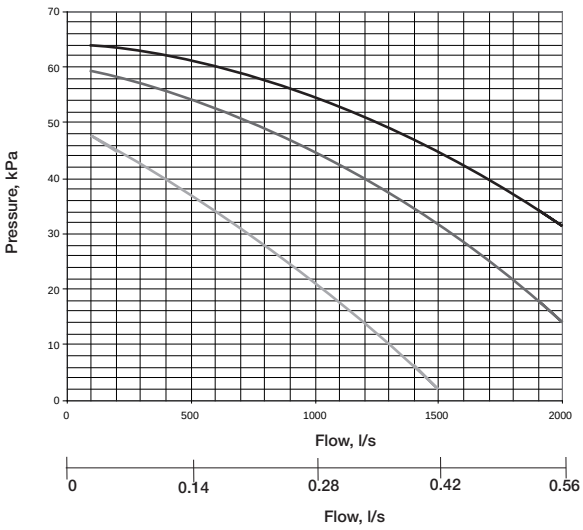

High speed
Medium speed
Low speed

80AW 150

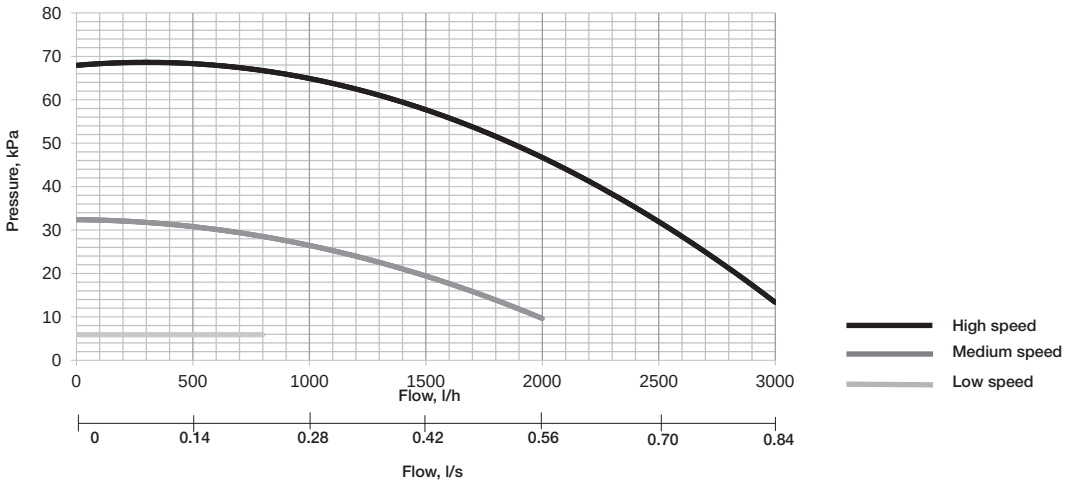

Hydraulic charts

Physical data, two-zone kit

Dimensions		
Unit H x L x D	mm	485 x 450 x 330
Packaging H x L x D	mm	565 x 530 x 410
Unit weight	kg	22
Gross weight	kg	27
Hydronic data		
Water connections	in	1” male
Operating water pressure	kPa (bar)	100 (1)
Maximum pressure	kPa (bar)	300 (3)
Hydronic components		
Pump		Two water-cooled pumps, three speeds, 70 kPa static pressure
Three-way valve		One modulating valve, 6.3 Kv, switching time (90°) 240 seconds, 230-V, 3-point SPDT actuator
Collector volume	l	1
Draining valve		√
Outside air operating range, heating and cooling		See Comfort module

Electrical data, two-zone kit

Power supply	V-ph-Hz	230-1-50
Voltage range	V	207-253
Power input	W	260

Sound levels, two-zone kit

		Without comfort module	With comfort module
Sound power level	dB(A)	44	46
Sound pressure level*	dB(A)	30	32

* Measured at 2 m distance, in accordance with UNI EN ISO 3741.

Available static pressure, two-zone kit

Zone with modulating valve

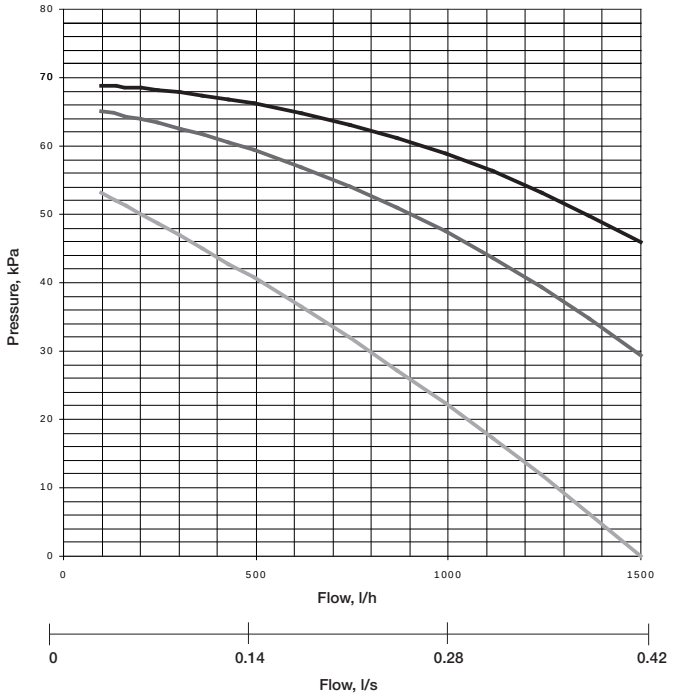

Zone without modulating valve

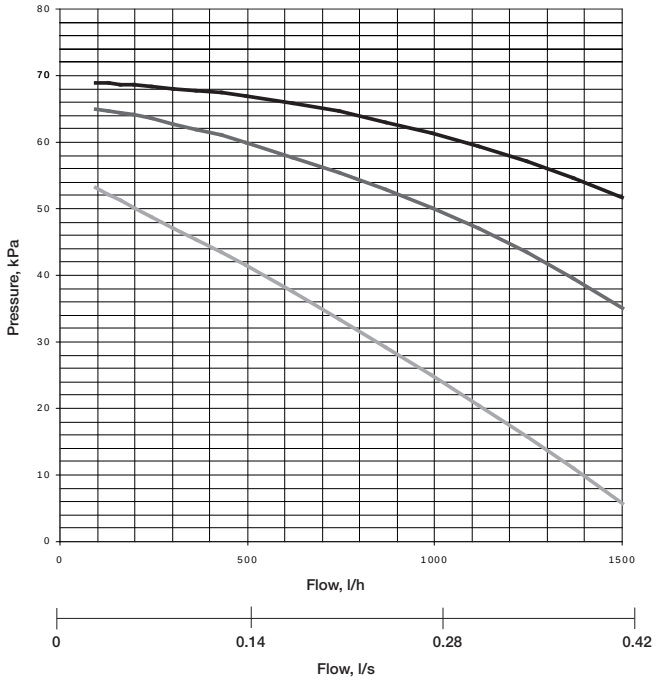

High water pump speed
Medium water pump speed
Low water pump speed

Pressure, circulating pump 80AW

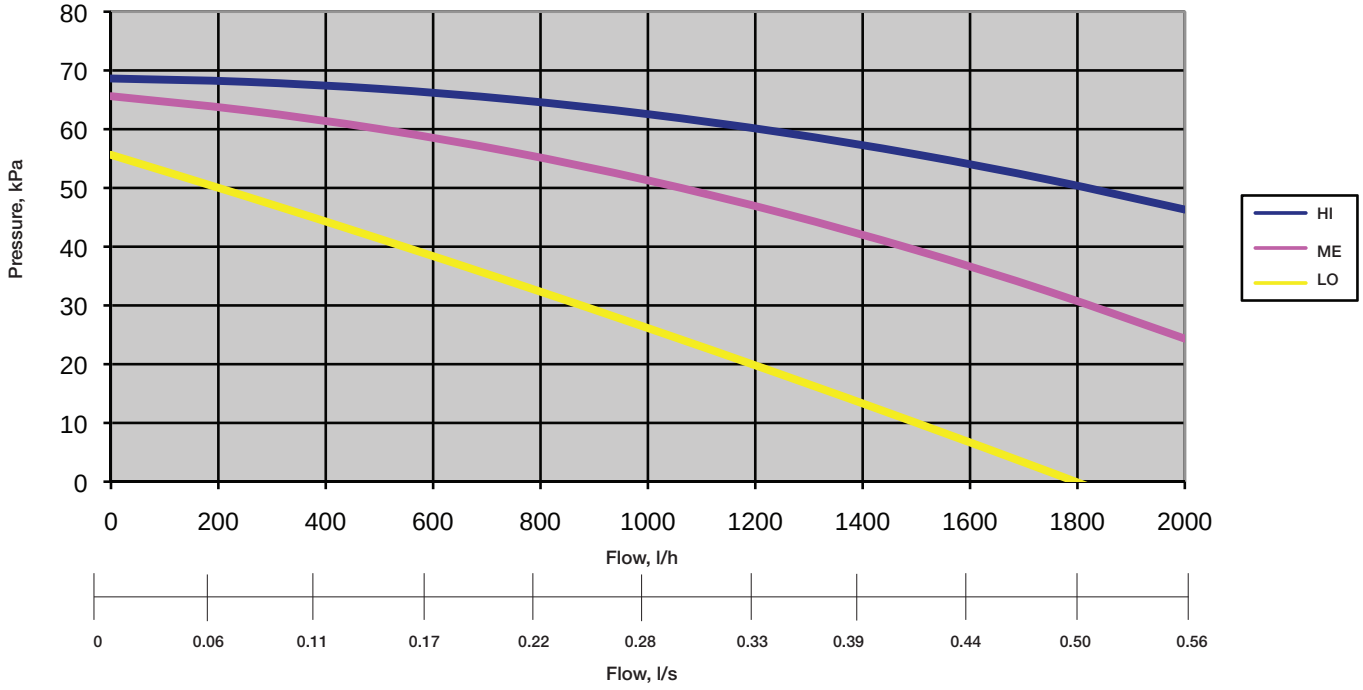

Dimensions/clearances

Dimensions (mm), outdoor units

38AW 090-115H7
38AW 120-150H9

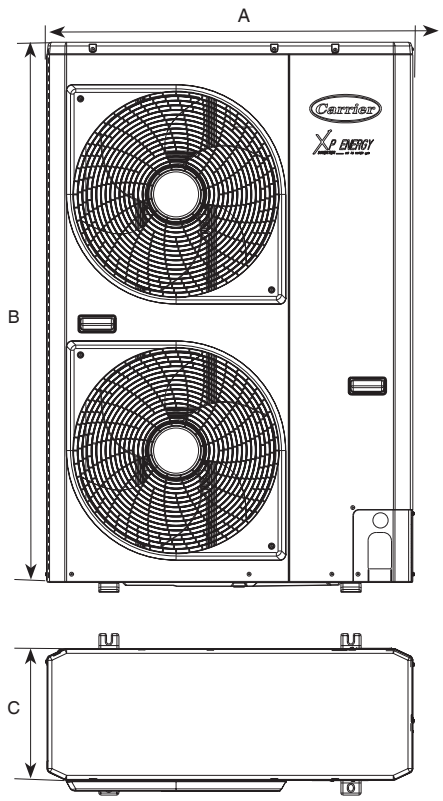

38AW 065H7

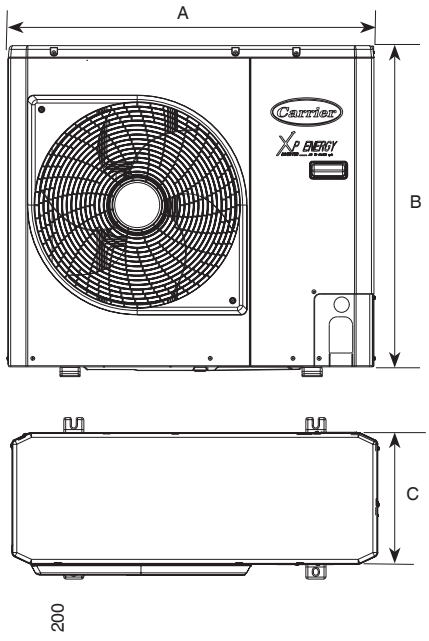

38AW 050H7

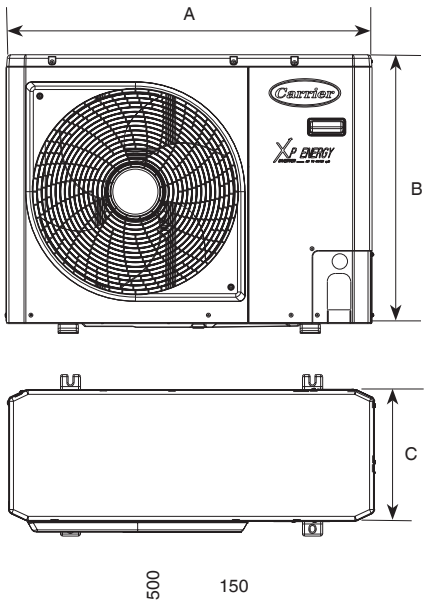

Dimensions, mm	A	B	C	Weight, kg
38AW 050H7	900	690	320	49
38AW 065H7	900	820	320	51
38AW 090H7/115H7	900	1360	320	88
38AW 120H9/150H9	900	1360	320	100

Drain hose and base pan knockouts

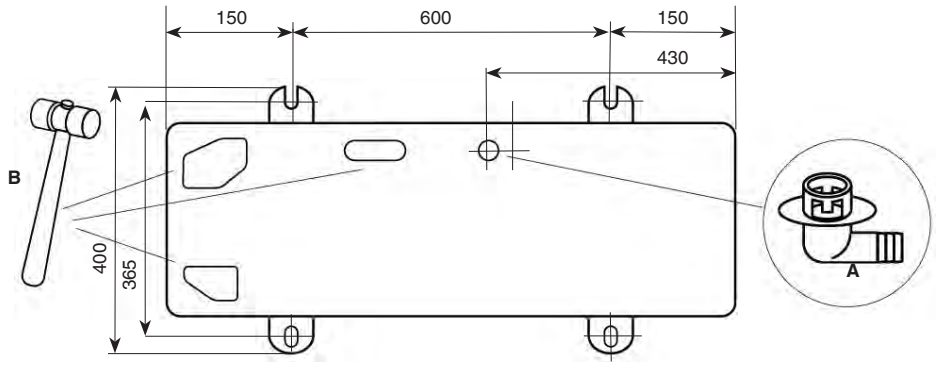

In case of draining through the drain pipe, attach the drain nipple (A) and use a drain hose with an inside diameter of 16 mm (to be provided). In cold outside temperatures when the drain pipe can freeze up, ensure that drainage is not obstructed.

Open the knockout holes in the base pan to improve the drainage capacity. Use a hammer (B) to open the knockout holes.

Clearances (mm), outdoor units

Single unit installation

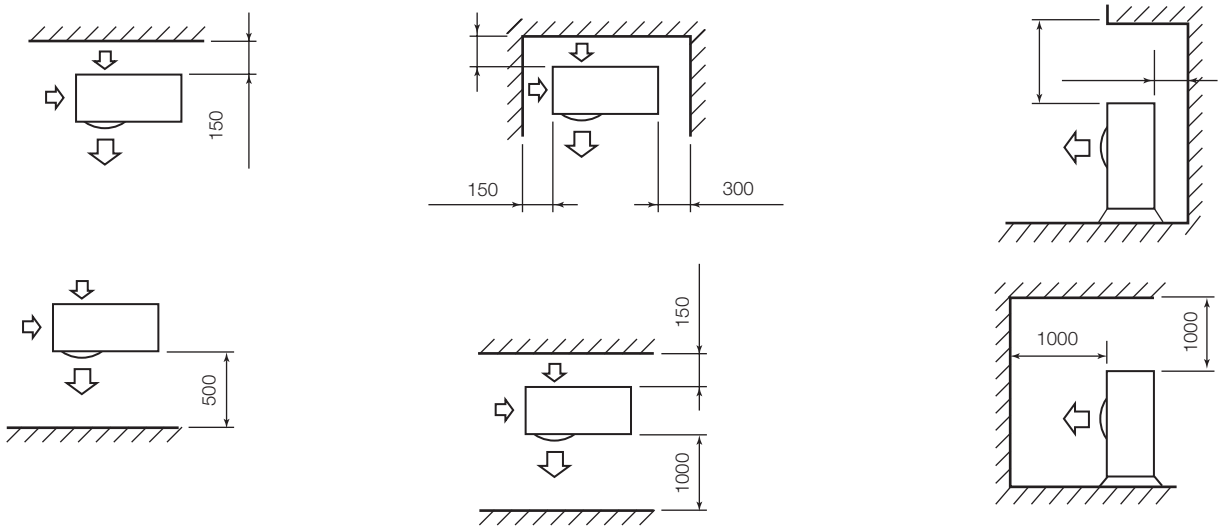

Multiple unit installation

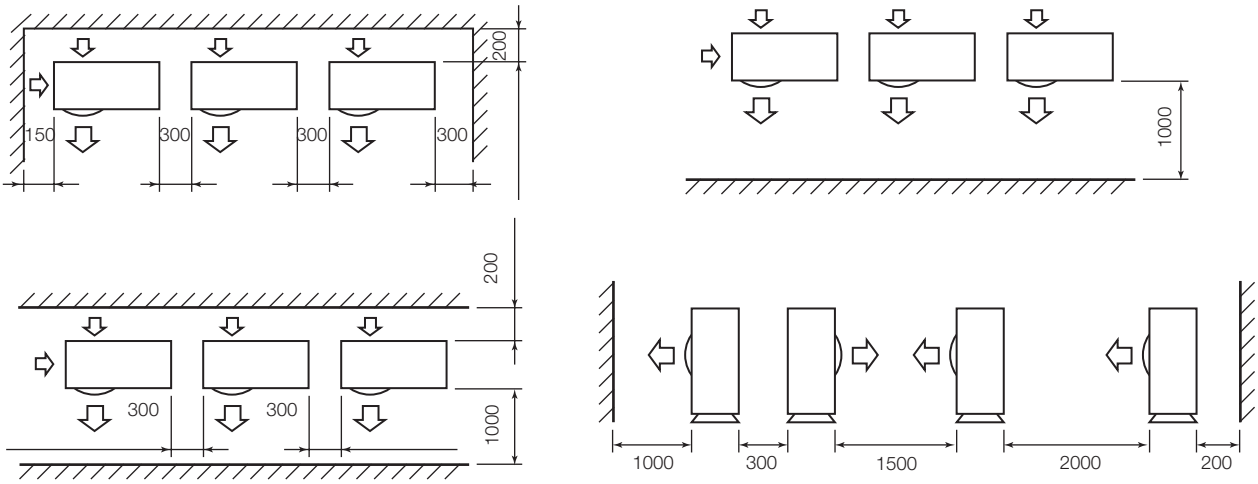

Note: The height of any obstacle at both the front and rear should be less than the outdoor unit height.

Dimensions, indoor units

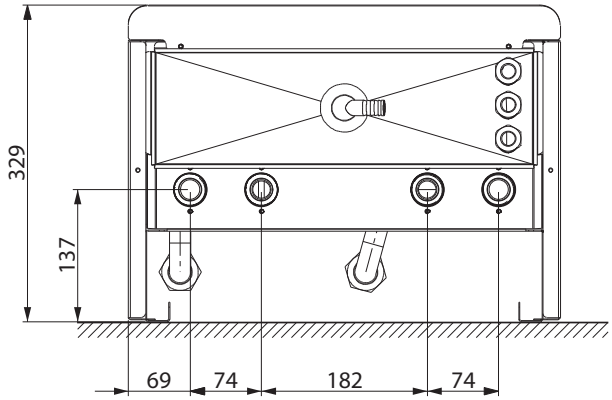

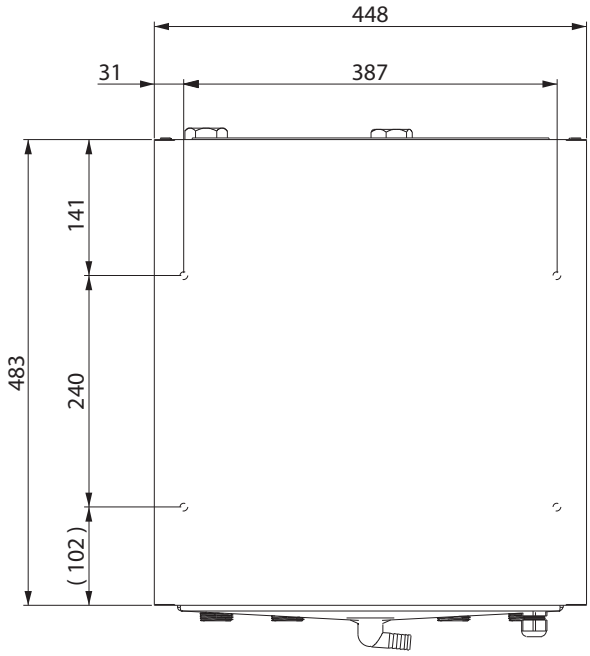

Note: All dimensions are in millimetres.

Clearances, indoor units

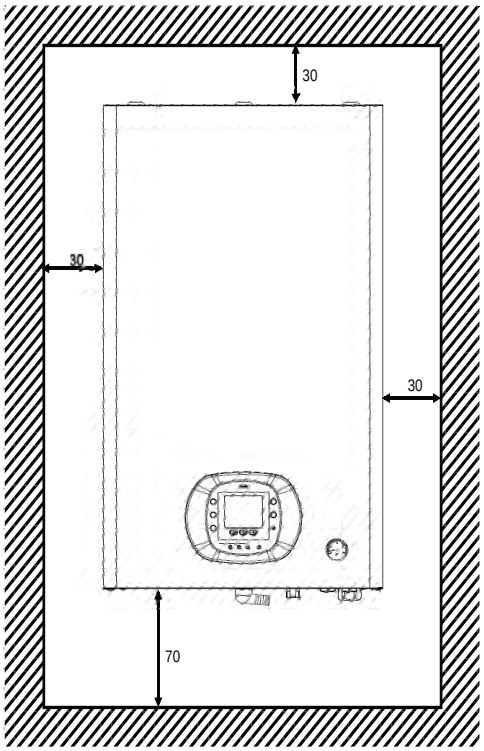

Dimensions (mm), two-zone kit

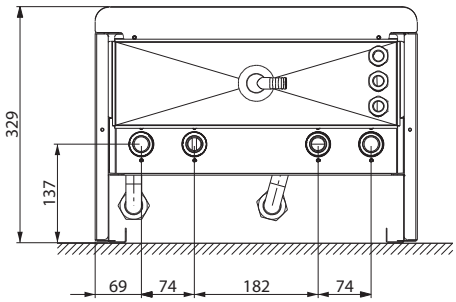

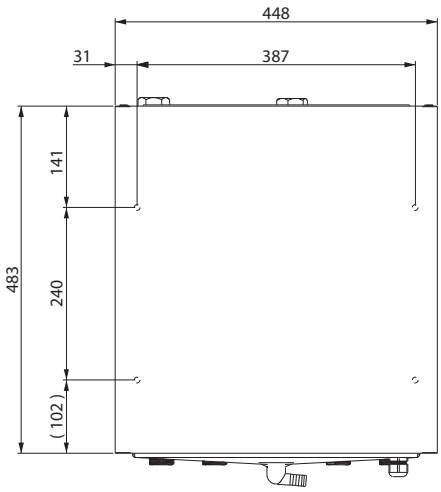

30AWH

Nominal heating capacity 4-15 kW
Nominal cooling capacity 3-16 kW

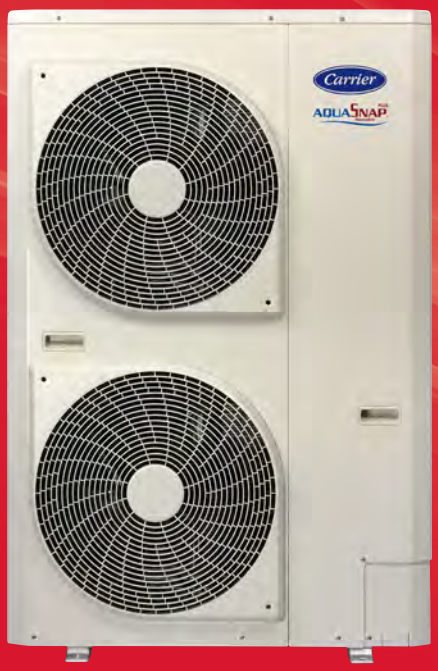

AQUASNAP PLUS Reversible

HEATING

Monobloc inverter

Compact, reliable and efficient

More than a heat Pump

The reversible AquaSnap PLUS air-to-water heat pumps/chillers with built-in inverter technology were designed for residential and light commercial applications. They offer excellent energy efficiency values, exceptionally quiet operation and meet the most stringent operating temperature demands.

The units integrate the latest technological innovations: Non-ozone depleting refrigerant R410A, DC inverter twin-rotary compressors, low-noise fan and microprocessor control.

With exceptional energy efficiency values the inverter mini-chillers qualify for local tax reductions and incentive plans in all EU countries.

The 30AW units were specifically designed for ease-of-installation and service and underline Carrier's reputation for highest product quality and reliability.

For added flexibility the AquaSnap PLUS units are available with or without hydraulic module. The AquaSnap PLUS can be used with complementary accessories to suit the installation - 80HMA Comfort modules, 200 or 300 litres domestic hot water tank with or without thermal solar panel connection.

The AquaSnap PLUS heat pump systems can be used with a wide choice of Carrier terminal fan coil units - cassettes, low, medium and high-pressure satellite units, console units, underceiling units and high-wall units.

Physical data

30AWH				004	006	008	012	015	012-3Ph	015-3Ph
Cooling										
H version Full load performances*	**C1**	**Nominal capacity**	kW	3.33	4.73	5.84	10.24	13.04	10.20	13.00
	C1	EER	kW/kW	3.02	3.00	2.98	2.96	2.95	3.00	2.91
	C1	Eurovent class cooling		B	B	B	B	B	B	B
	C2	**Nominal capacity**	kW	4.93	7.04	7.84	13.54	16.04	13.50	16.00
	C2	EER	kW/kW	4.20	3.70	3.99	3.66	3.85	4.15	3.81
	C2	Eurovent class cooling		A	B	A	B	A	A	A
Seasonal efficiency*		ESEER	kW/kW	4.36	4.51	4.15	4.22	4.31	4.4	4.31
Heating										
H version Full load performances*	**H1**	**Nominal capacity**	kW	4.07	5.76	7.16	11.86	14.46	12	15
	H1	COP	kW/kW	4.15	4.28	3.97	3.95	4.09	4.3	4.2
	H1	Eurovent class cooling		A	A	B	B	A	A	A
	H2	**Nominal capacity**	kW	3.87	5.76	7.36	12.91	13.96	11.20	14.50
	H2	COP	kW/kW	3.26	3.05	3.19	3.03	3.23	3.35	3.30
	H2	Eurovent class cooling		A	B	B	B	A	A	A
	H3	**Nominal capacity**	kW	4.27	5.43	7.25	10.89	12.36	11.43	12.17
	H3	COP	kW/kW	2.92	2.77	2.81	2.79	3.02	3.12	2.98
Seasonal efficiency**	H3	SCOP	kW/kW	3.53	3.37	2.84	2.95	3.25	3.47	3.33
	H3	ηs heat	%	138	132	111	115	127	136	130
	H3	Prated	kW	3.28	4.22	4.65	8.68	9.05	8.38	9.37
	H3	Annual energy consumption	kWh	1900	2571	3367	6077	5748	4975	5806
	H3	Energy efficiency class		A++	A++	A+	A+	A++	A++	A++
Sound levels standard unit										
Sound power level(1) (C1)			dB(A)	64	64	65	68	69	69	69
Dimensions										
Length			mm	908	908	908	908	908	908	908
Depth			mm	350	350	350	350	350	350	350
Height			mm	821	821	821	1363	1363	1363	1363
Operating weight(3)										
Unit without circulator (X version)			kg	54	58	66	101	109	113	113
Unit with circulator (H version)			kg	57	61	69	104	112	116	116
Compressors				DC Inverter Twin-Rotary						

* In accordance with standard EN14511-3:2013
** In accordance with standard EN14825:2013, average climate
C1 Cooling mode conditions: evaporator water entering/leaving temperature 12°C/7°C, outside air temperature 35°C, evaporator fooling factor 0 m^2 K/W
C2 Cooling mode conditions: evaporator water entering/leaving temperature 23°C/18°C, outside air temperature 35°C, evaporator fooling factor 0 m^2 K/W
H1 Heating mode conditions: Water heat exchanger water entering/leaving temperature 30°C/35°C, fouling factor 0 m^2 K/W. Outside air temperature 7°C db/6°C wb,
H2 Heating mode conditions: Water heat exchanger water entering/leaving temperature 40°C/45°C, fouling factor 0 m^2 K/W. Outside air temperature 7°C db/6°C wb,
H3 Heating mode conditions: Water heat exchanger water entering/leaving temperature 47°C/55°C, fouling factor 0 m^2 K/W. Outside air temperature 7°C db/6°C wb,
(1) In dB ref=10^{-12} W, (A) weighting. Declared dualnumber noise emission values in accordance with ISO 4871 (with an associated uncertainty of +/-3dB(A)). Measured in accordance with ISO 9614-1.
(2) In dB ref 20µPa, (A) weighting. Declared dualnumber noise emission values in accordance with ISO 4871 (with an associated uncertainty of +/-3dB(A)). For information, calculated from the sound power level Lw(A).
(3) Weights are guideline only. Refer to the unit nameplate

Eurovent certified data

Eurovent certified data

Physical data

30AWH		004	006	008	012	015	012-3Ph	015-3Ph
Refrigerant		R410A						
Circuit charge(1)	kg	1.195	1.35	1.81	2.45	3.385	2.45	3.385
	CO_2 eq.	2.5	2.8	3.8	5.1	7.1	5.1	7.1
Air heat exchangers		Copper tubes and aluminium fins						
Fans		Variable speed 3 blades fan						
Quantity		1	1	1	2	2	2	2
Water heat exchanger (X version)								
Water pressure drop (C1)	kPa	10	8	10	20	28	20	28
Water pressure drop (H1)	kPa	17	12	14	25	33	25	33
Water pressure drop (H2)	kPa	16	12	14	29	31	29	31
Min. system water content	l	14	21	28	42	49	42	49
Max. water-side operating pressure	kPa	300	300	300	300	300	300	300
Hydronic module (H version)								
Pump		Variable speed circulator						
Expansion tank volume	l	2	2	2	3	3	3	3
Available static pressure (C1)	kPa	69	72	58	62	37	66	37
Available static pressure (H1)	kPa	60	60	56	70	58	70	55
Available static pressure (H2)	kPa	62	60	55	72	60	73	58
Min. system water content	l	14	21	28	42	49	42	49
Max. water-side operating pressure	kPa	300	300	300	300	300	300	300
Water connections with or without hydronic module								
Diameter	inch	1 M	1 M	1 M	1 M	1 M	1 M	1 M
Outside tube diameter	mm	25.4 M	25.4 M	25.4 M	25.4 M	25.4 M	25.4 M	25.4 M
Chassis paint colour		Beige						

C1 Cooling mode conditions: evaporator water entering/leaving temperature 12°C/7°C, outside air temperature 35°C, evaporator fooling factor 0 m^2 K/W
H1 Heating mode conditions: Water heat exchanger water entering/leaving temperature 30°C/35°C, fouling factor 0 m^2 K/W. Outside air temperature 7°C db/6°C wb,
H2 Heating mode conditions: Water heat exchanger water entering/leaving temperature 40°C/45°C, fouling factor 0 m^2 K/W. Outside air temperature 7°C db/6°C wb,
H3 Heating mode conditions: Water heat exchanger water entering/leaving temperature 47°C/55°C, fouling factor 0 m^2 K/W. Outside air temperature 7°C db/6°C wb,
(1) Weights are guideline only. Refer to the unit nameplate

Electrical data

30AW		004	006	008	012	015	012-3Ph	015-3Ph
Power supply	V-ph-Hz	230-1-50	230-1-50	230-1-50	230-1-50	230-1-50	400-3-50	400-3-50
Voltage range	V	198-264	198-264	198-264	198-264	198-264	376-424	376-424
Full load current	A	9	11	14.5	20.7	22.6	11.1	11.1
Fuse rating	A	10	16	16	25	25	16	16
Main power cable section	mm^2	2.5	2.5	2.5	2.5	2.5	2.5	2.5

Type key

30AW H 006 H D 9

Liquid chilling packages/ heat pumps

Air-to-water heat pump

H - Standard version

Power supply: 9 = Three-phase

Index

Unit options
H - With hydronic kit
X - Without hydronic kit

Nominal size
004 - nominal size 4 kW
006 - nominal size 6 kW
008 - nominal size 8 kW
012 - nominal size 12 kW
015 - nominal size 15 kW

Options and accessories

Options	Description	Advantages	Use 30AWH
Additional outdoor sensor	Additional outdoor sensor 33AW-RAS01	Better reading of outdoor air temperature	30AW 004-015
Remote controller	33AW-RC1 remote controller	On/off, heating/cooling and ECO mode	30AW 004-015
Programmable thermostat	33AW-CS1 ComfortTM series programmable thermostat	Extensive control features like weekly scheduling	30AW 004-015
80HMA comfort module	5 sizes with integrated system control, expansion vessel and electric booster heating or boiler backup	Complementary heating system	30AW 004-015
Domestic hot water tank 200 or 300 l, 1 coil	Domestic hot water tank 200 or 300 l	Storage, 200 l or 300 l of domestic hot water	30AW + 80HMA
Domestic hot water tank 200 or 300 l, 2 coils	Domestic hot water tank 200 or 300 l with thermal solar panel connection	Storage, 200 l or 300 l of domestic hot water	30AW + 80HMA

Note: All 30AWH sizes are compatible with 80HMA comfort module range and domestic hot water tank models.
Please refer to 80HMA documentation to get the option codes and the list of complementary accessories.
Please consider that 80HMA is necessary to manage water sensor and electric heater integrated into DHW tank.

Features and advantages

Features

- Wide operating range in both heating and cooling mode offering high performance in a wide temperature range.
- DC inverter twin-rotary compressors with Pulse Amplitude Modulation (PAM) and Pulse Width Modulation (PWM) for enhanced reliability, low energy consumption and smooth vibration-free operation under all operating conditions.
- Variable-speed fans with an innovative patented fan blade shape ensure improved air distribution at exceptionally low noise levels
- Pre-set or customised selection of the appropriate climate curve for stable output capacity to match the heat load.
- Output to link and integrate the unit with existing heat sources or a back-up heating source (single or dual-energy approach) for increased savings and optimum comfort all year round.
- Connection and control of an external dehumidifer through the ComfortTM Series programmable thermostat 33AW-CS1 to monitor and regulate the relative humidity.
- Input and output connections to the three-way valve for connection to a domestic hot-water buffer-tank. Provides increased flexibility for any application.
- Leaving water temperature up to 60°C for radiator and domestic hot water applications.
- Plug-and-play control for failsafe serviceability.
- Alarm input to force the unit off for increased safety, and matching with external control systems or safety devices.
- Output to operate an additional water pump for increased installation flexibility.

Advanced technology

- Electronic system management: several sensors placed in key positions in the refrigerant circuit electronically detect the operational system status. Two micro-controllers receive the input from the sensors, manages them using advanced control algorithms and optimises the refrigerant flow and the functioning of all core components - the compressor, fan motors and the pulse modulation valve.
- The pulse modulation valve, a bi-flow electronic expansion device, optimises the refrigerant amount in the circuit and the superheat, preventing refrigerant migration back into the compressor. This device further enhances high system performance and reliability.
- The air management system, consisting of the propeller fan, orifice and air discharge grille guarantees minimised noise levels.

Patented fan blade shape and grille profile with low pressure drop

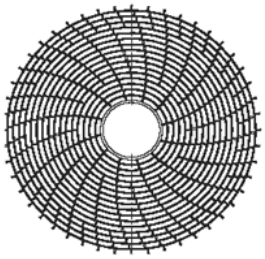

Advanced performance

- The AquaSnap PLUS heat pump systems have an extremely high energy efficiency ratio in both cooling and heating mode, ensuring significant energy savings. Large, efficient coils and optimised circuiting ensure that all combinations meet the European tax rebate efficiency targets. Efficiency at part load conditions (seasonal energy efficiency) reaches the highest level in the industry.
- Year-round comfort - the advanced technology used in the new AquaSnap PLUS heat pump condensing units provides optimised comfort levels for the end users, both in terms of water temperature control and quietness. The desired temperature is quickly reached and effectively maintained without fluctuations. The 30AW offers optimised individual comfort levels - both in winter and in summer.
- Wide temperature operating range: AquaSnap PLUS heat pumps can operate efficiently in extreme temperature conditions. To suit the requirements of IT applications, the new AquaSnap PLUS can work at low-ambient conditions in cooling mode (down to 0°C and up to 46°C outside temperature). For end user comfort the units also operate down to -20°C outdoor temperature in heating mode, and in the summer season they produce hot water up to 60°C at up to 30°C outside temperature for domestic hot water applications.

Environmentally balanced

- Non-ozone depleting R410A refrigerant.
- Chlorine-free refrigerant of the HFC group with zero ozone depletion potential.
- High-density refrigerant, therefore less refrigerant required.
- Very efficient - gives an increased energy efficiency ratio (EER).
- The components of AquaSnap PLUS heat pump systems are free of any hazardous substances.
- The new packaging ensures high protection during transport and handling and is 100% recyclable.
- Ecodesign is the European Directive that sets mandatory requirements for Energy related Products (ErP) to improve their energy efficiency. Carrier supports
- initiatives to reduce the environmental impact of its products.

DC inverter twin-rotary compressor

- Advanced technology providing maximum energy-efficiency with high capacity available at peak conditions and optimised efficiency at low and mid compressor speeds. The AquaSnap PLUS heat pump DC inverter uses Intelligent Power Drive Unit (IPDU) hybrid inverter technology, combining two electronic management logics: Pulse Amplitude Modulation (PAM) and Pulse Width Modulation (PWM) for optimised compressor operation in all conditions, minimised temperature fluctuations, and providing perfect individual comfort control with significantly reduced energy consumption:
  - PAM: pulse amplitude modulation of the direct current controls the compressor at maximum load conditions (start-up and peak load), increasing the voltage at fixed frequency. The compressor works at high speed to rapidly achieve the desired temperature.
  - PWM: pulse width modulation of the direct current controls the compressor at partial load conditions, adjusting the frequency at fixed voltage. The compressor speed is fine-tuned and the system provides high-level comfort (no temperature fluctuations) at exceptionally efficient working conditions.

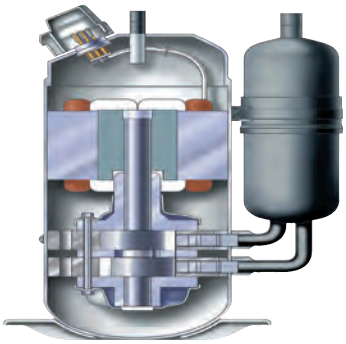

- Compressor frequency is increased continuously up to the maximum level. This ensures that there are no current draw peaks in the start-up phase and safe connection to a single-phase power supply even in large-capacity systems. The maximum operating current of AquaSnap PLUS systems is below 7.2 A (systems up to 4 kW) and below 23 A for larger systems (12 kW). Inverter ramp-up speed makes soft starts unnecessary and ensures immediate maximum power.
- The two rotary compression cylinders, offset from each other by 180°, and the DC brushless motor with the shaft in perfect balance ensure reduced vibration and noise, even at very low operating speeds. This results in an extremely wide range between minimum and maximum capacity with con- tinuous operation, guaranteeing that the system is always optimised and provides maximum comfort at exceptionally high efficiency levels.
- Twin-rotary cylinders, low vibrations and low load to the shaft ensure highest compressor reliability and a long trouble-free operating life.
- All DC brushless twin-rotary compressors are equipped with crankcase heaters as standard.
- A double compressor shield for acoustic insulation further reduces noise levels.

Superior reliability

- Exceptional endurance tests
  - Third-party testing and certification - all performances are certified by Eurovent and unit safety is certified by IMQ.
  - All units are tested at various stages on the production line for circuit leakage, electrical compliance, water and refrigerant pressures.
  - End-of-line test of all unit operating parameters.
  - Corrosion resistance test.
  - Accelerated ageing test on critical components and complete assembled units, simulating thousands of hours of continuous operation
  - Packaging crash test to ensure that the units are adequately protected against accidental shocks.
  - Extensive field and site testing.

GMC board

Corrosion-resistant casing

Economical operation

- Increased energy efficiency at part load
  - The exceptionally high energy efficiency of the AquaSnap PLUS heat pumps is the result of a long qualification and optimisation process.
  - Use of ambient air as primary source of energy in domestic heating applications significantly reduces the overall energy consumption and minimises CO_2 emissions.
  - Night mode operation at reduced compressor speed, resulting in low-noise operation and a significant reduction in energy consumption.
  - Easy-to-set and economical silent mode, reducing the compressor speed.
  - R410A refrigerant is easier to use than other refrigerant blends.

Controls

- The new GMC controller was specifically developed for the AquaSnap PLUS inverter heat pumps, and incorporates new control algorithms. It features customised or pre-defined climate curves, domestic hot water control, a night-time noise reduction function, a defrost/alarm output signal, an external heat source, a pump block prevention function, freeze protection and compressor operation management.

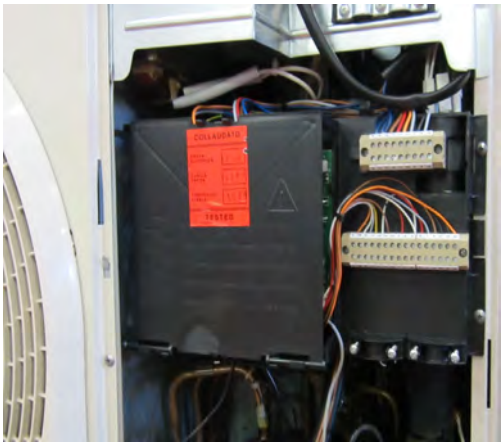

User interfaces

- The AquaSnap PLUS can use the following user interfaces:
  - The 33AW-CS1 ComfortTM Series programmable thermo-stat with easy-to-read LCD screen. It provides enhanced control capability for maximised performance, reliability and indoor comfort and has extended programming features such as weekly scheduling and dehumidifier/humidifier signals. The sleek contemporary design blends in with any room decor.
  - The AquaSnap PLUS 33AW-RC1 remote controller
  - Dry contacts.

Comfort™ Series programmable thermostat 33AW-CS1

Remote controller 33AW-RC1

Operating limits

Cooling mode	
Maximum outside temperature	46 °C
Maximum leaving water temperature	18 °C
Minimum outside temperature	0°C (30AWH004-006: 5°C)
Minimum leaving water temperature	4 °C

Heating mode	
Maximum outside temperature	30 °C
Maximum leaving water temperature	60 °C
Minimum outside temperature	-20 °C
Minimum leaving water temperature	20 °C

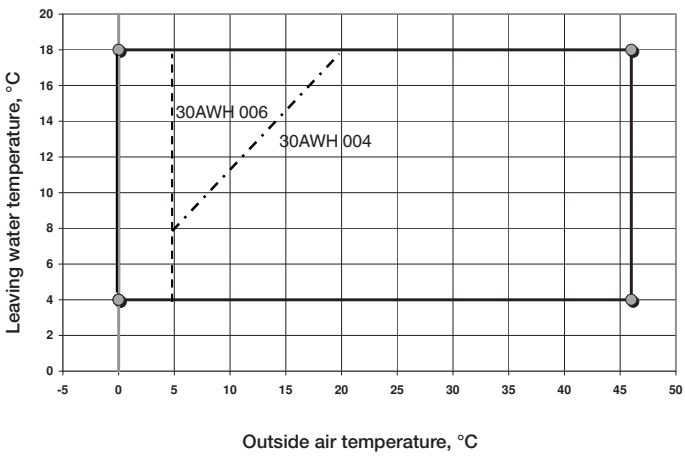

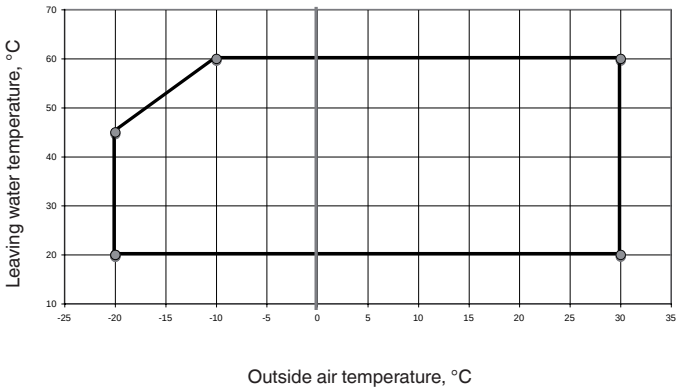

Available static pressure (units with hydronic module)

30AWH 004H

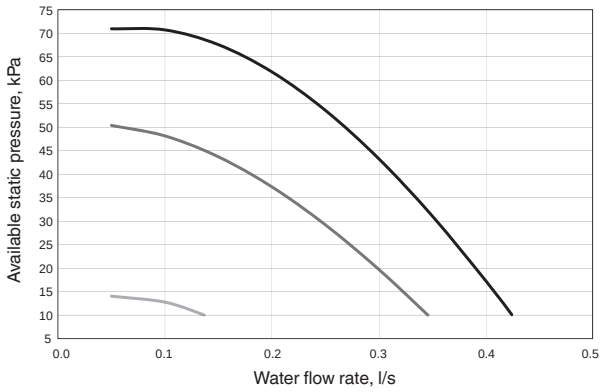

30AWH 006H

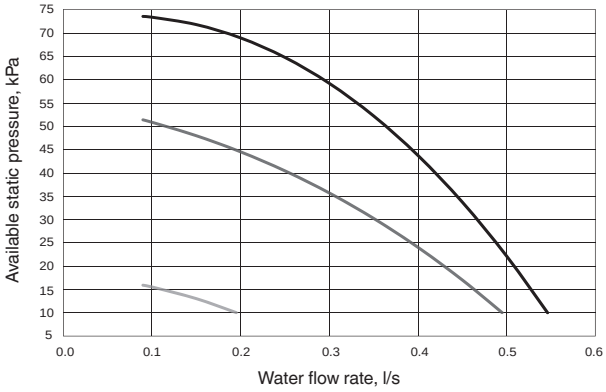

30AWH 008H

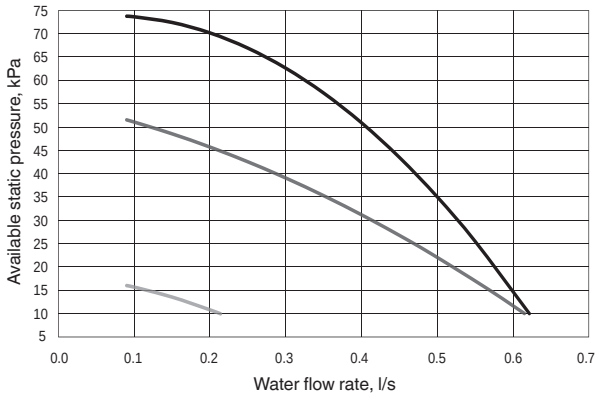

30AWH 012H + 015H

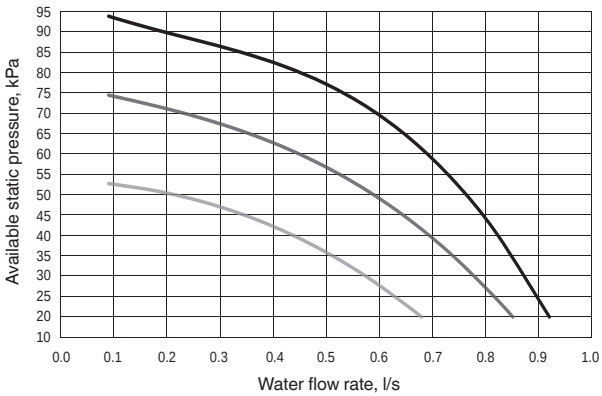

Pressure drop curves (units without hydronic module)

30AWH 004X

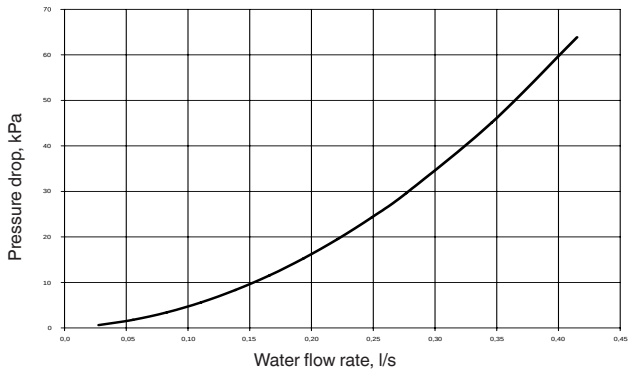

30AWH 006X

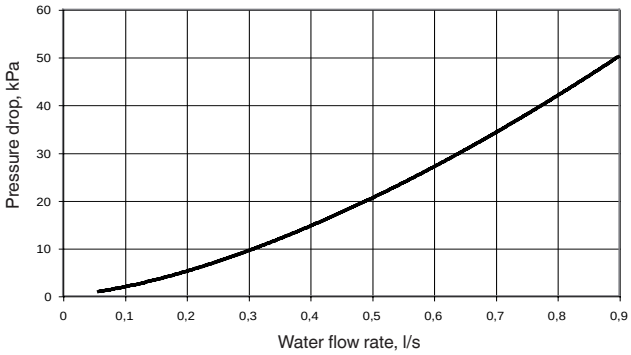

30AWH 008X

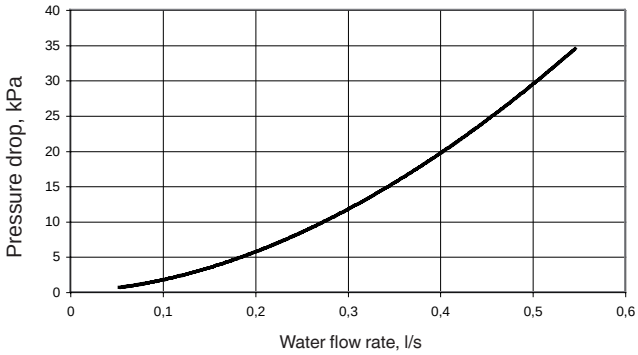

30AWH 012X + 015X

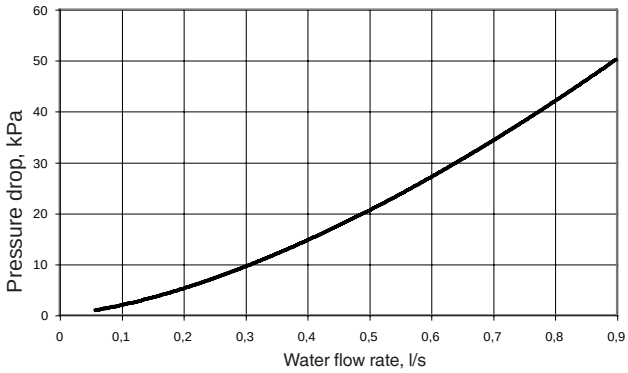

Hydronic module

The hydronic module reduces the installation time. The unit is factory-equipped with the main hydronic components required for the installation: variable speed circulator, expansion tank and safey valve.

The water heat exchanger and the hydronic module are protected against frost down to -10 °C, using pump cycling. The hydronic module is integrated into the unit without increasing its dimensions and saves the space normally used for the water pump.

Suggested hydronic circuit installation

30AWH - H models

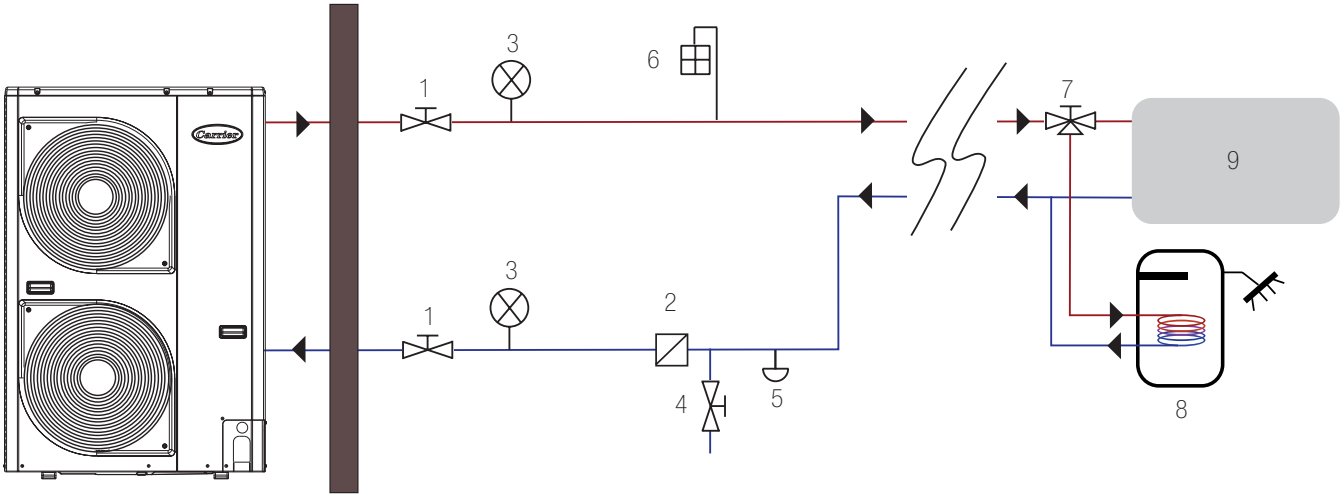

30AWH - X models

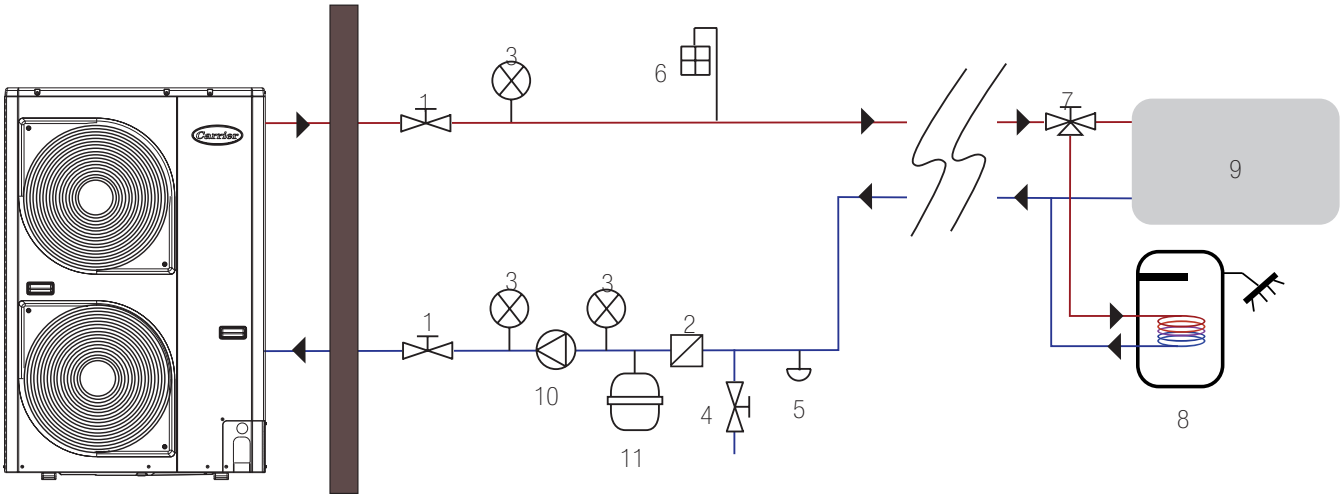

Legend

1 Ball valve
2 Water filter (10 mesh/inch)
3 Pressure gauge
4 Charge valve
5 Drain valve (located at the lowest water circuit point)
6 Purge valve (located at the highest water circuit point)
7 Three-way valve
8 Domestic hot water tank
9 Terminals (fan coil units, underfloor heating, radiators
10 Water pump
11 Expansion tank

Dimensions, mm

30AW 004-008

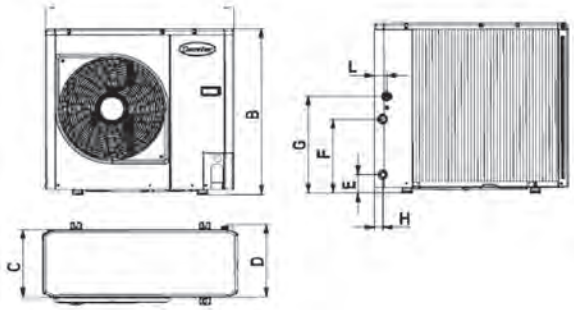

30AW 012-015

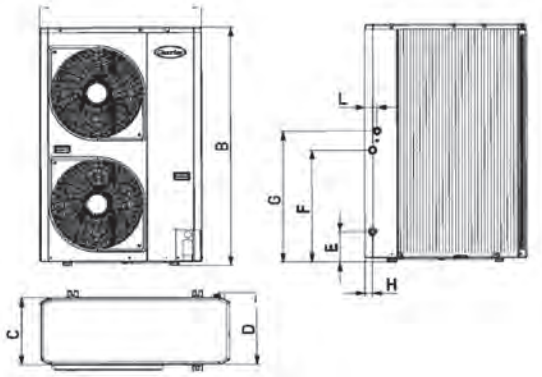

30AW	A	B	C	D	E	F	G	H	L
004	908	821	326	350	87	356	466	40	60
006	908	821	326	350	87	356	466	40	60
008	908	821	326	350	87	356	466	40	60
012	908	1363	326	350	174	640	750	44	69
015	908	1363	326	350	174	640	750	44	69

Clearances, mm

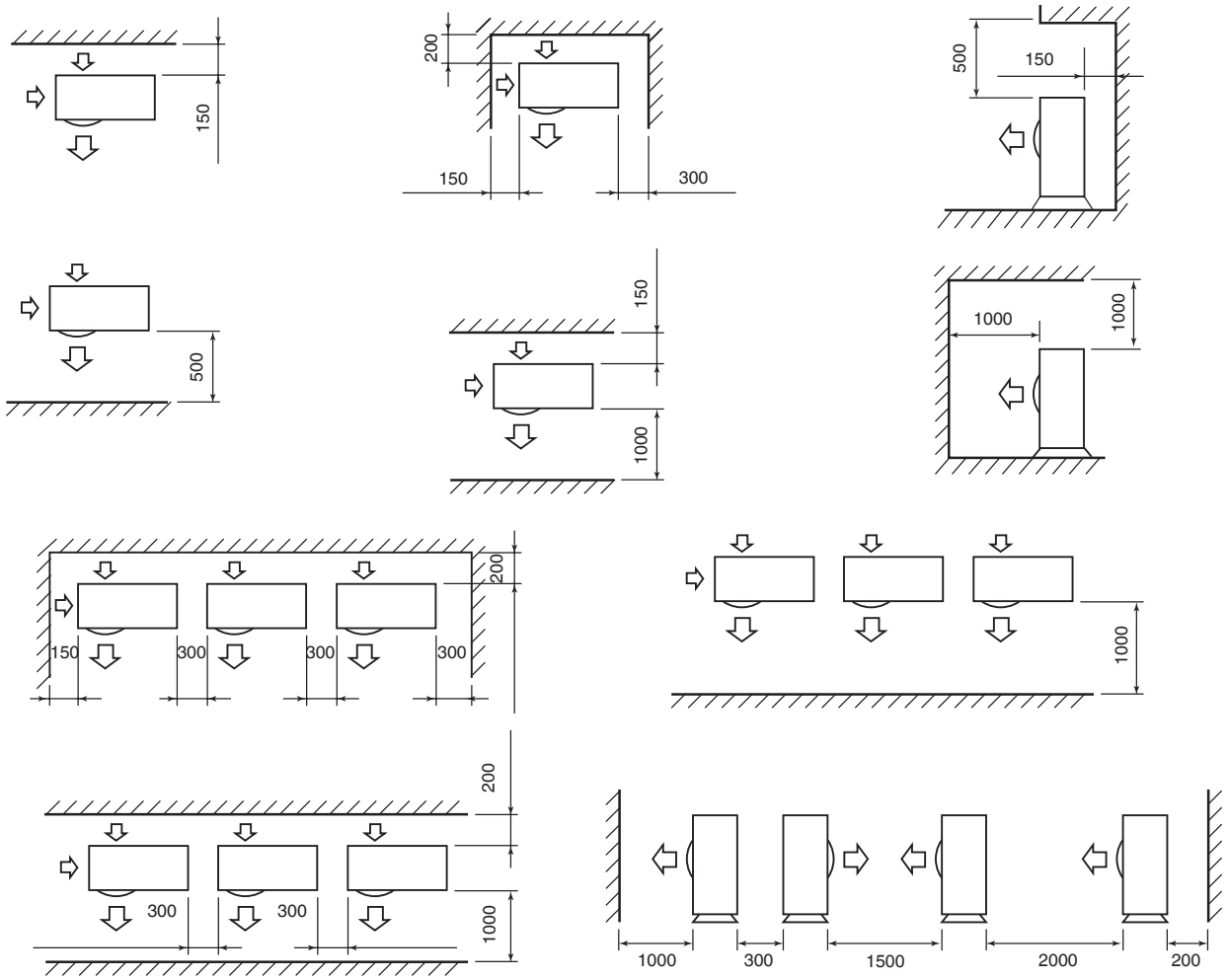

80HMA

HEATING

The comfort module range for monobloc inverter heat pumps offers a complete heating system that is easy to design and install.

System controls ensure optimised energy efficiency, using auto-adaptative weather compensation control that constantly monitors the indoor and outdoor climate to optimise the heat pump energy efficiency and deliver perfect indoor climate.

With its improved aesthetics and compactness, combined with the latest features and options, the comfort module sets standards in energy savings and comfort. Using the two-zone kit, two different terminal unit types or two independent comfort zones can be closely monitored. Domestic hot water production is made easy and can be interfaced with thermal solar panels.

Compact confort module

DHW management possibility

Multi zone option control

Easy installation

Physical data

Indoor unit (comfort module)		80HMA-M00	80HMA-M03	80HMA-M06	80HMA-T06	80HMA-T09
Number of comfort zones		1	1	1	1	1
Electric booster element	kW	0	3	6	6	9
Number of auxiliary heating steps		1 (external boiler)	1	3	3	3
Connection of back-up boiler		Yes	No	No	No	No
Dimensions, H x L x D	mm	800 x 450 x 320	800 x 450 x 320	800 x 450 x 320	800 x 450 x 320	800 x 450 x 320
Operating weight	kg	34	35	35	35	35
Power supply	V-ph-Hz	230-1-50	230-1-50	230-1-50	400-3-50	400-3-50
Recommended circuit breaker size		C6	C20	C32	C16	C20

Combination table, indoor and outdoor units

Outdoor unit (heat pump)		Indoor unit (comfort module)	
30AWH04HC	Nominal capacity 4 kW	**80HMA-M00**	Reversible, 1 zone, maximum heating capacity 20 kW for boiler back-up application
30AWH06HC	Nominal capacity 6 kW	**80HMA-M03**	Reversible, 1 zone, maximum heating capacity 20 kW with 3 kW 1-phase electrical heater booster
30AWH08HC	Nominal capacity 8 kW	**80HMA-M06**	Reversible, 1 zone, maximum heating capacity 20 kW with 6 kW 1-phase electrical heater booster
30AWH12HC	Nominal capacity 12 kW	**80HMA-T06**	Reversible, 1 zone, maximum heating capacity 20 kW with 6 kW 3-phase electrical heater booster
30AWH12HC9	Nominal capacity 12 kW	**80HMA-T06**	Reversible, 1 zone, maximum heating capacity 20 kW with 6 kW 3-phase electrical heater booster
30AWH15HC	Nominal capacity 15 kW	**80HMA-T09**	Reversible, 1 zone, maximum heating capacity 20 kW with 9 kW 3-phase electrical heater booster
30AWH15HC9	Nominal capacity 15 kW	**80HMA-T09**	Reversible, 1 zone, maximum heating capacity 20 kW with 9 kW 3-phase electrical heater booster

Note: All 30AWH sizes are compatible with the 80HMA comfort module range. Comfort module controls can also manage up to eight 30AWH units. A parallel hydronic coupling of the unit to a tank is necessary (field supply). 30RQ 017 to 021 and 61AF 014 to 019 units are also compatible, but the water volume of this installation must be checked by a professional and comply with the heat pump size minimum requirements. Depending on the terminal unit type installed with the Carrier system a buffer tank may have to be added.

Electrical data

Comfort module 80HMA		M00	M03	M06	T06	T09
Power supply	V-ph-Hz	230-1-50	230-1-50	230-1-50	400-3-50	400-3-50
Voltage range	V	207-253	207-253	207-253	360-400	360-400
Max. power consumption, board and auxiliary devices	kW	1.15	1.15	1.15	1.15	1.15
Board and auxiliary circuit breaker protection (not included)		C6	C6	C6	C6	C6
Electric heater power consumption	kW	0	3	6	6	9
Electric heater circuit breaker protection (not included)		C6	C20	C32	C16	C20
Max. operating current	A	5	18	31	14	18
Main power cable size	mm^2	3G x 2.5	3G x 4	3G x 6	5G x 2.5	5G x 4
Communication cable (FROH2R)	mm^2	2 x 0.75	2 x 0.75	2 x 0.75	2 x 0.75	2 x 0.75
User interface (additional or remote) cable (FROH2R)	mm^2	4 x 0.75	4 x 0.75	4 x 0.75	4 x 0.75	4 x 0.75
Booster heater power supply cable (H05VV-F)	mm^2	3G x 2.5	3G x 2.5	3G x 2.5	3G x 2.5	3G x 2.5
Booster heater activation cable (FROH2R)	mm^2	2 x 1	2 x 1	2 x 1	2 x 1	2 x 1
Domstic hot water sensor cable (FROH2R)	mm^2	2 x 0.5	2 x 0.5	2 x 0.5	2 x 0.5	2 x 0.5
Remote outdoor sensor cable (FROH2R)	mm^2	2 x 0.5	2 x 0.5	2 x 0.5	2 x 0.5	2 x 0.5

Note: The heat pump data depends on the heat pump used.

Type key

Indoor unit (comfort module)

80HMA M 03

Product range

03 - 06 - 09 - Back-up electric heater size in kW
00 - For boiler back-up

single-phase model (230V 1Ph+N)
three-phase model (400V 3Ph+N)

Unit description

Part number	
80HMA-M00	Indoor unit, reversible, 1 zone, for boiler back-up
80HMA-M03	Indoor unit, reversible, 1 zone, 3 kW 1-ph electric heater back up
80HMA-M06	Indoor unit, reversible, 1 zone, 6 kW 1-ph electric heater back up
80HMA-T06	Indoor unit, reversible, 1 zone, 6 kW 3-ph electric heater back up
80HMA-T09	Indoor unit, reversible, 1 zone, 9 kW 3-ph electric heater back up

Accessories

Part No.	Description	Advantages	Use 80HMA
33AW-CB02	Communication kit	To be installed in 30AWH	30AW----H--
33AW-CS3	Additional user interface	Monitors two independent comfort zones or used together with comfort module interface	80HMA, 80HMA-9001, 80HMA-9002
33AW-RAS02	Remote outdoor sensor	Positioned in the right place, the OAT sensor maximises comfort compared to using the condensing unit OAT sensor	80HMA
60STS020E03	Domestic hot water tank, 1 coil - 200 l	Storage, 200 l of domestic hot water	80HMA
60STS030E03	Domestic hot water tank, 1 coil - 300 l	Storage, 300 l of domestic hot water	80HMA
60STD020E03	Domestic hot water tank, 2 coils - 200 l	Storage, 200 l of domestic hot water with thermal solar panel connection	80HMA
60STD030E03	Domestic hot water tank, 2 coils - 300 l	Storage, 300 l of domestic hot water with thermal solar panel connection	80HMA
80AW9023	Domestic hot-water three-way valve and actuator	Necessary to connect domestic hot water tank	80HMA, 60ST, 80HMA-9002
80AW9024	Thermal cut-out, floor heating	Stops circulating pump when supply temperature is too high	80HMA, 80HMA-9001, 80HMA-9002
80AW9026	Piping kit to install domestic hot-water valve and actuator (80AW9023) inside the unit	Specific DHW piping kit for the installation, used together with 80HMA-9001	30HMA-9001
80AW9027	Cover panel to install two-zone kit (80HMA-9001) detached from comfort module	Hides piping and connections, if two-zone kit is installed remotely from the main comfort module	80HMA-9001
80AW9028	Kit to add three-way valve and actuator in second zone	Necessary to include domestic hot-water three-way valve in second zone kit	80HMA-9001
80HMA-9001	Two-zone kit	Allows independent control of two comfort zones	80HMA
80HMA-9002	Pool kit	Control box with all necessary sensors required to control three-way valve to divert flow	80HMA
80HMA-9003	Pump kit	Necessary when available heat pump pressure is too low for the installation	80HMA
80HMA-9004	BPHE kit (for heat pumps up to 8 kW)	Separate heat pump loop (with glycol) from indoor loop; includes BPHE and variable speed circulator	80HMA
80HMA-9005	BPHE kit (for heat pumps up to 16 kW)	Separate heat pump loop (with glycol) from indoor loop; includes BPHE and variable speed circulator	80HMA

Features and advantages

Features

- Reversible operation.
- Electric booster heater or boiler back-up.
- Auto-adaptative weather compensation control.
- Dual comfort zone with independent control of two terminal unit types.
- Domestic hot water production control with possible interfacing with thermal solar panels.
- Easy-to-read user interface with weekly scheduling and quick-access settings: comfort, eco and night mode.
- Swimming pool heating control (optional)
- Heat exchanger to create primary and secondary water loop when using frost protection (optional field installation in comfort module)
- Variable speed circulator with high head pressure (optional)

New user interface

- The comfort module has an easy-to-use user interface with easy-to-read LCD screen. It provides enhanced control capability for maximised performance, reliability and indoor comfort and has extended programming features such as weekly scheduling. The sleek contemporary design blends in with any room decor.

Domestic hot water tank

- With or without connection to a thermal solar panel, 200 or 300-litre tank. Built-in electric heater back-up and anti-legionnella protection, controlled by the comfort module, make domestic hot water readily available, safe and energy-efficient.

Swimming pool heating control kit

- This control box, fitted with all necessary sensors and for wall-mounting next to the comfort module, controls swimming pool heating, using the heat pump. Hot water from the heat pump is sent from the space heating system to the swimming pool by controlling a diverting valve similar to the one used for domestic hot water (field supply). Swimming pool heating can be in accordance with a time schedule that defines priorities between space heating/cooling, domestic hot-water production and swimming pool heating. An field-supplied intermediate heat exchanger, fitted with the necessary circulating pumps, is mandatory to ensure that water from the swimming pool is not used for the space heating system.

Two-zone kit

- The design facilitates the installation process and makes two independent comfort zones easy to control. This kit includes a hydronic disconnection collector, the necessary variable speed circulators and modulating valve. Installed together with the domestic hot water tank, the two-zone kit can integrate all accessories, such as the diverting valve and T-connection.

Intermediate heat exchanger

- When adding antifreeze to the water loop, this option allows limiting the use of antifreeze between heat pump and comfort module by creating a primary and secondary water loop.

Heat pump compatibility

- All 30AW----H-- sizes are compatible with the 80HMA comfort module range. Comfort module controls can also manage up to eight 30AWH units. A parallel hydronic coupling of the unit to a tank is necessary (field supply).
- 30RQ 017 to 021 and 61AF 014 to 019 units are also compatible, but the water volume of this installation must be checked by a professional and comply with the heat pump size minimum requirements. Depending on the terminal unit type installed with the Carrier system a buffer tank may have to be added.

Operating limits

Heat pump limits	Depends on the heat pump selected
Comfort module limits	
Indoor temperature	5-30°C
Water temperature, cooling	4-18°C
Water temperature, heating	20-80°C

Pressure drops

Pressure drop, comfort module

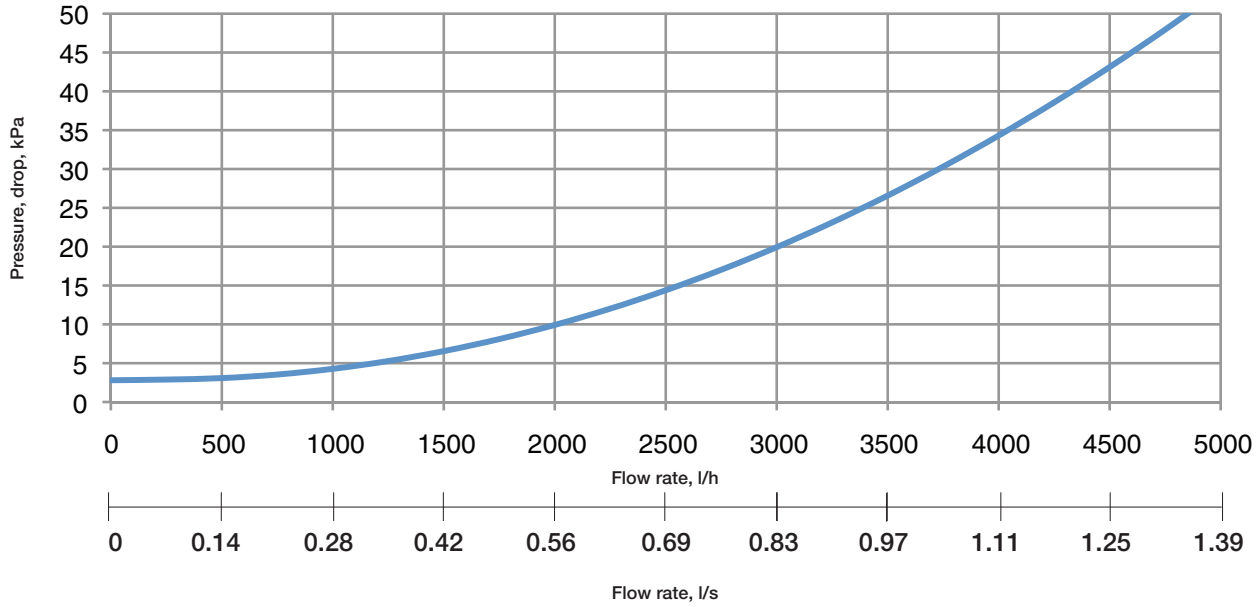

Pressure drop, comfort module plus pump kit

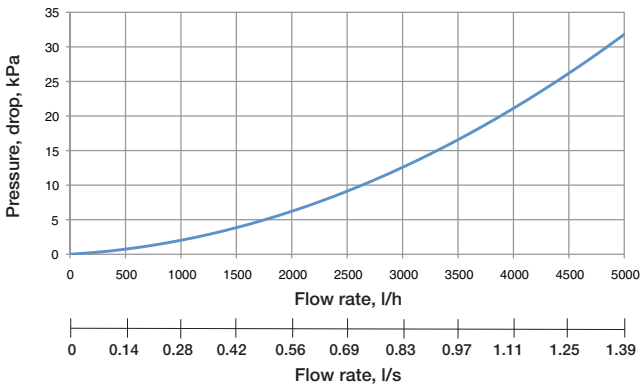

The pump kit is required when the available heat pump pressure is too low to cover the system pressure drop. The water pump in the heat pump will then be used to irrigate the comfort module buffer tank and the additional comfort module pump is used to distribute the heat from the comfort module buffer tank to the terminal units.

Head pressure, comfort module plus pump kit

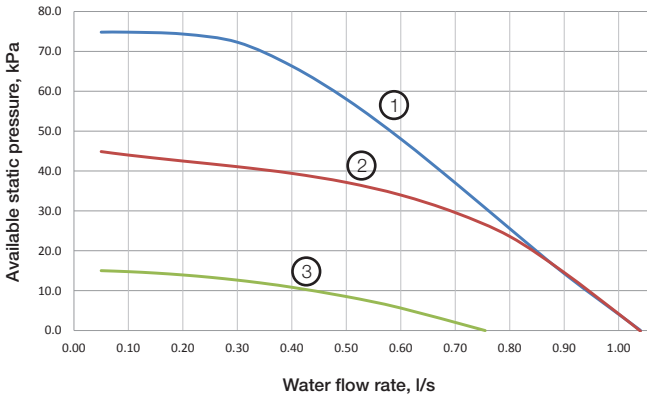

1 High speed (ΔP-c 8)

2 Medium speed (ΔP-c 4)

3 Low speed (ΔP-c 1)

Pressure drop, comfort module plus BPHE kit

With 8 kW BPHE kit

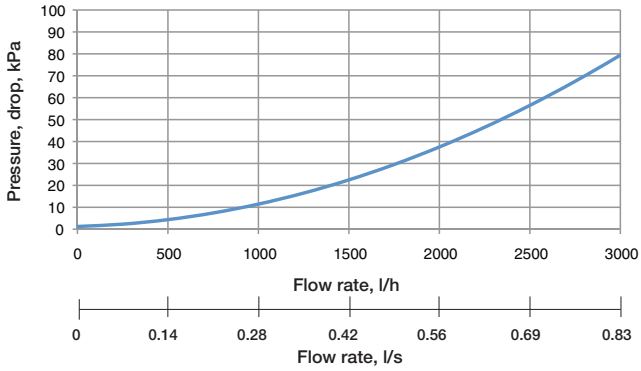

With 16 kW BPHE kit

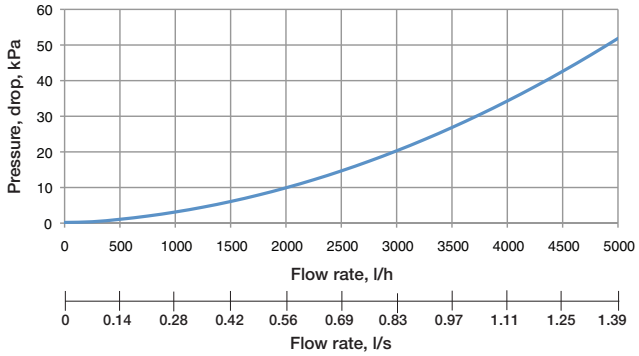

Head pressure, comfort module plus BPHE kit

With 8 kW BPHE kit

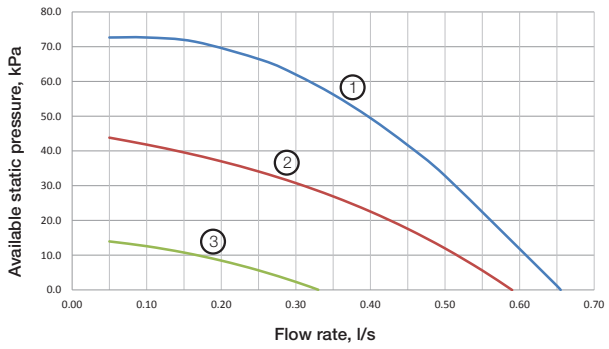

1 High speed (ΔP-c 8)
2 Medium speed (ΔP-c 4)
3 Low speed (ΔP-c 1)

With 16 kW BPHE kit

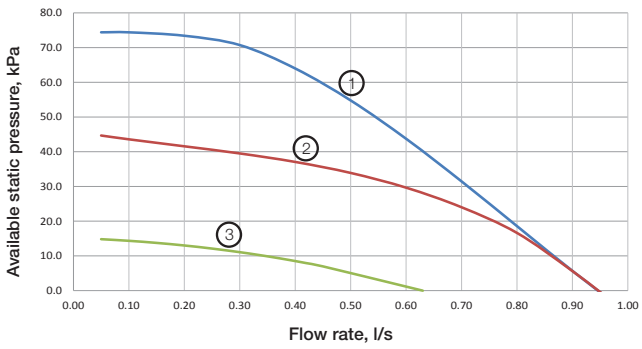

1 High speed (ΔP-c 8)
2 Medium speed (ΔP-c 4)
3 Low speed (ΔP-c 1)

The comfort module BPHE kit includes a heat exchanger and a variable speed circulator. It creates two independent water loops, one between heat pump and comfort module buffer tank and the other between the comfort module and the terminal units. If the heat pump is used for heating only applications, this option allows limiting the use of antifreeze protection between heat pump and comfort module.

Dimensions/clearances

Dimensions, comfort module

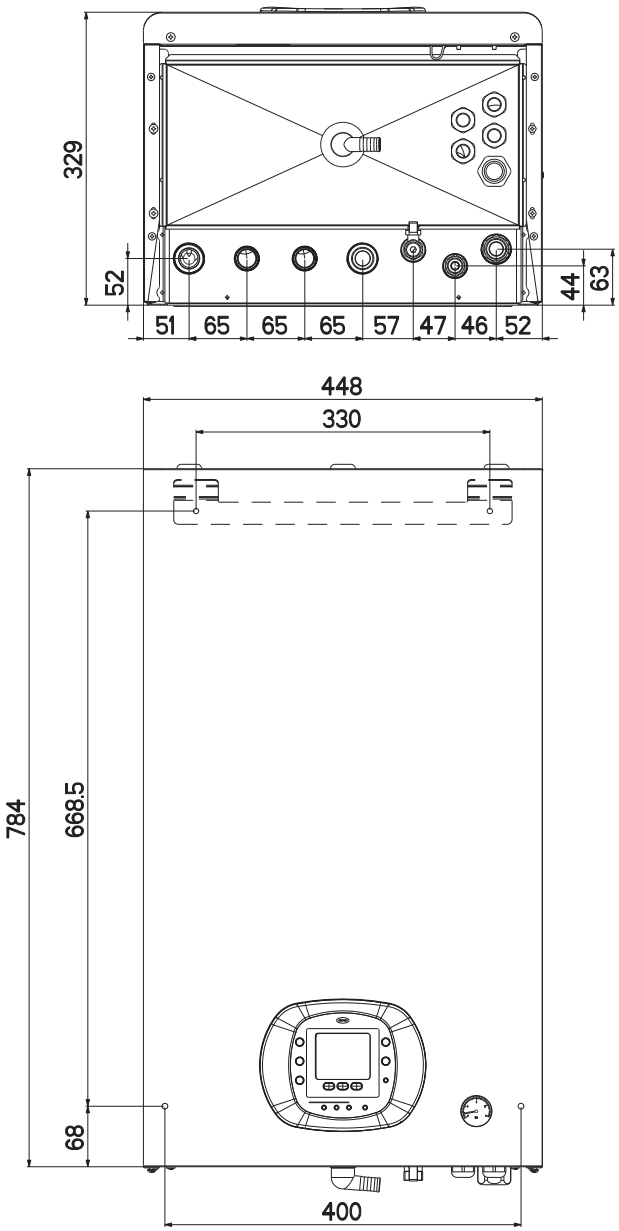

Clearances, comfort module

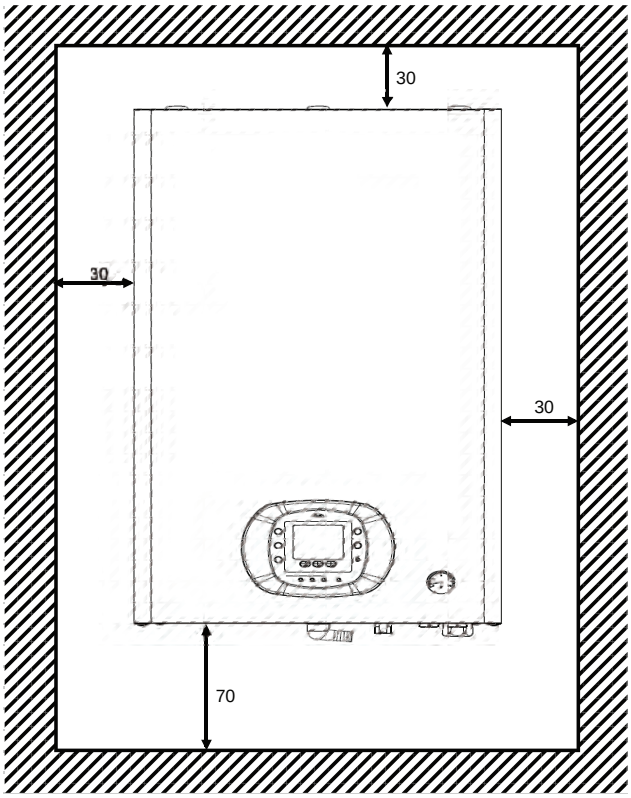

Note: All dimensions are in millimetres.

Dimensions (mm), two-zone kit

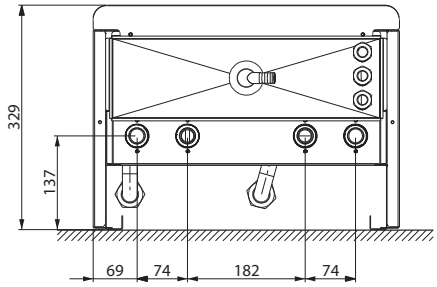

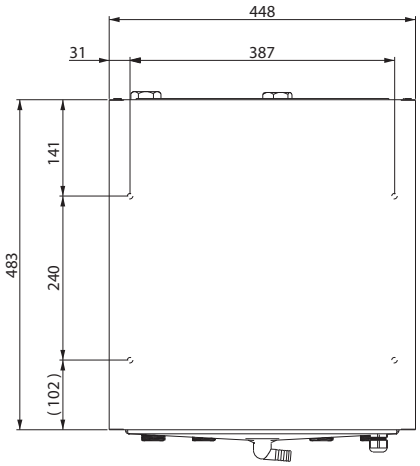

Clearances (mm), two-zone kit

Connected to the comfort module

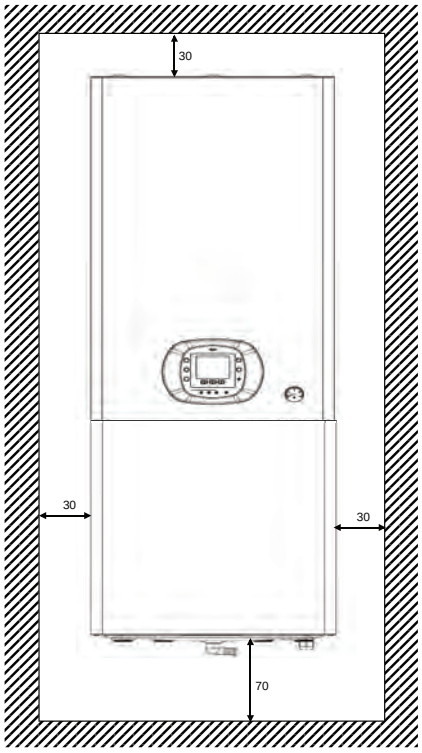

Detached from the comfort module

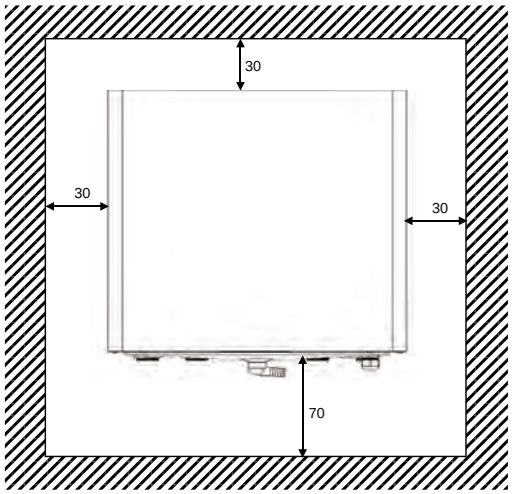

Typical installation diagrams, domestic hot water (DHW) module

System with solar panel and tanks
60STD 020E03 or 60STD 030E03

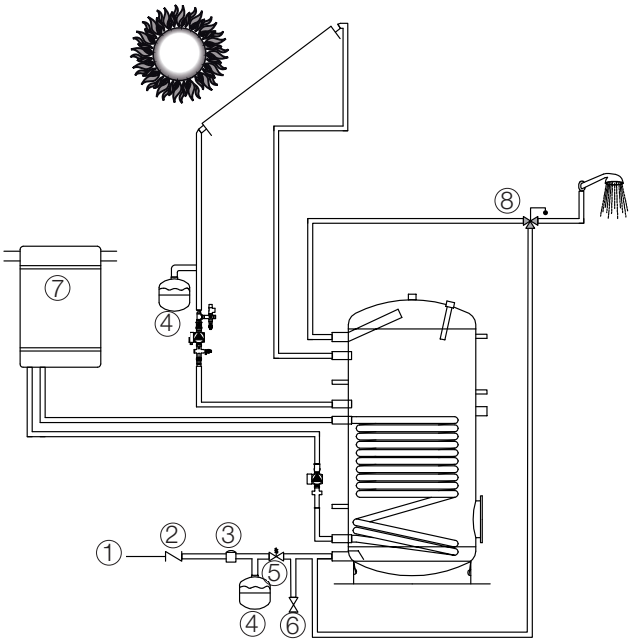

System without solar panel and tanks
60STS 020E03 or 60STS 030E03

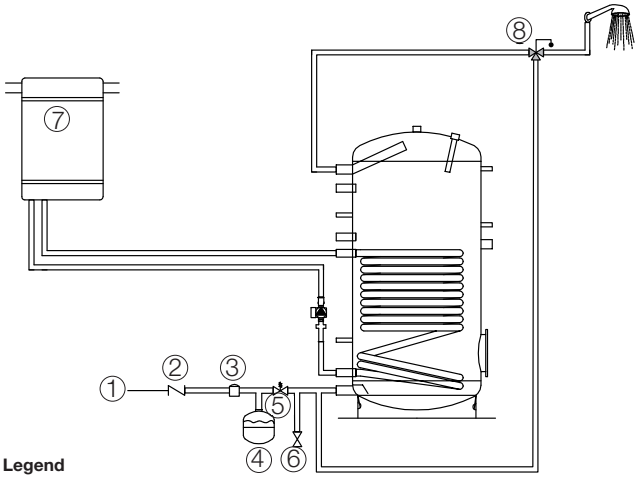

Legend

1 Water circuit
2 Check valve
3 Pressure reduction device
4 Expansion tank
5 Safety valve
6 Drain valve
7 Boiler
8 Thermostatic valve

61AF

Nominal heating capacity 14-20 kW

HEATING

AQUASNAP Heating

The AquaSnap high-temperature heat pump range was designed for commercial applications such as the heating of offices, apartments and hotels as well as domestic hot water production in new and refurbished buildings.

Hot water up to 65°C

Exceptional energy efficiency level

Hydronic module with Class A circulator

Superior reliability

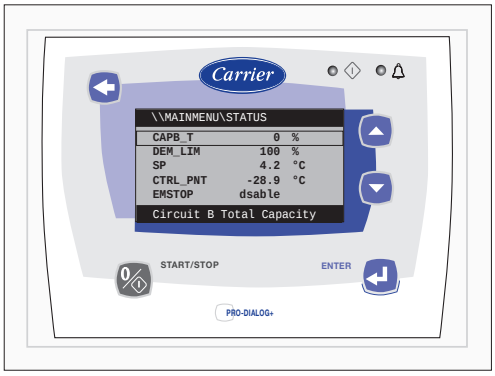

Pro-Dialog+ operator interface

Physical data

EUROVENT CERTIFIED PERFORMANCE
www.eurovent-certification.com

61AF				014-7	014-9	019-9
Heating						
Standard unit	H1	Nominal capacity	kW	14.1	13.7	19.8
Full load performances *	H1	COP	kW/kW	3,34	3,52	3,49
	H1	Eurovent class heating			A	A
	H2	Nominal capacity	kW	13.9	13.5	20.2
	H2	COP	kW/kW	3,90	4,17	4,28
	H2	Eurovent class heating			A	A
	H3	Nominal capacity	kW	14,2	13,8	19,8
	H3	COP	kW/kW	2,93	3,03	2,96
	H4	Nominal capacity	kW	14,0	13,7	20,1
	H4	COP	kW/kW	2,44	2,50	2,43
Full load performances**	H1	Gross nominal capacity	kW	14,0	13,6	19,7
	H1	Gross COP	kW/kW	3,38	3,56	3,54
	H2	Gross nominal capacity	kW	13,8	13,5	20,1
	H2	Gross COP	kW/kW	3,96	4,24	4,36
	H3	Gross nominal capacity	kW	14,1	13,8	19,7
	H3	COP	kW/kW	2,94	3,04	2,98
	H4	Gross nominal capacity	kW	14,0	13,6	20,0
	H4	COP	kW/kW	2,44	2,50	2,44
Seasonal efficiency***	H3	SCOP	kW/kW	2,72	2,84	2,84
	H3	ηs heat	%	106	111	111
	H3	Prated	kW	14	14	19
	H3	Energy Class		A+	A+	A+
	H2	SCOP	kW/kW	3,13	3,32	3,22
	H2	ηs heat	%	122	130	126
	H2	Prated	kW	14	14	18
	H2	Energy Class		A	A+	A+
Operating weight (1)						
Standard unit (without hydronic kit)			kg	159	159	206
Standard unit (plus hydronic module option)			kg	169	169	216
Sound levels						
Sound power level (2)			dB(A)	71	71	72
Sound pressure level at 10 m (3)			dB(A)	40	40	41
Dimensions						
Length			mm	1103	1103	1135
Depth			mm	333	333	559
Height			mm	1278	1278	1579
Compressor				One, hermetic scroll, 48.3 r/s, one capacity stage		
Refrigerant				R-407C		
Charge			kg	4.0	4.0	8.0
			teqCO_2	7,1	7,1	14,2
Capacity control				Pro-Dialog+		
Minimum capacity			%	100	100	100
Condenser				Direct-expansion plate heat exchanger		
Water volume			l	3.7	3.7	3.9
Max. water-side operating pressure with and without hydronic module			kPa	300	300	400
Fan				Two, axial twin-speed fans		
Total air flow (high speed)			l/s	2050	2050	2000
Speed			r/s	11.7	11.7	14.5
Evaporator				Grooved copper tubes and aluminium fins		
Pump				Variable speed pump		
Water connections with/without hydronic module				Victaulic		
Connections			inch	1 female	1 female	1 male in/1-1/4 male out
Outside diameter			mm	25	25	25 in/32 out
Chassis paint colour				Colour code: RAL 7035		

* In accordance with standard EN14511-3:2013
** Not in accordance with standard EN14511-3:2013.These performances do not take into account the correction for the proportionnal heating capacity and power input generated by the water pump to overcome the internal pressure drop in the heat exchanger.
*** In accordance with standard EN14825:2013, average climate
H1 Heating mode conditions: water heat exchanger water entering/leaving temperature 40°C/45°C, outside air temperature 7°C db/6°C wb, evaporator fooling factor 0 m².K/W
H2 Heating mode conditions: water heat exchanger water entering/leaving temperature 30°C/35°C, outside air temperature 7°C db/6°C wb, evaporator fooling factor 0 m².K/W
H3 Heating mode conditions: water heat exchanger water entering/leaving temperature 47°C/55°C, outside air temperature 7°C db/6°C wb, evaporator fooling factor 0 m².K/W
H4 Heating mode conditions: water heat exchanger water entering/leaving temperature 55°C/65°C, outside air temperature 7°C db/6°C wb, evaporator fooling factor 0 m².K/W
(1) Weight shown is a guideline only. Please refer to the unit nameplate
(2) In dB ref=10-12 W, (A) weighting. Declared dualnumber noise emission values in accordance with ISO 4871 (with an associated uncertainty of +/-3dB(A)). Measured in accordance with ISO 9614-1 and certified by Eurovent.
(3) In dB ref 20µPa, (A) weighting. Declared dualnumber noise emission values in accordance with ISO 4871 (with an associated uncertainty of +/-3dB(A)). For information, calculated from the sound power level Lw(A).

Eurovent certified data

Electrical data

61AF - Standard unit		Without pump			With pump		
		014-7	014-9	019	014-7	014-9	019
Power circuit							
Nominal power supply	V-ph-Hz	230-1-50	400-3-50	400-3-50	230-1-50	400-3-50	400-3-50
Voltage range	V	207-253	360-440	360-440	207-253	360-440	360-440
Control circuit supply		24 V, via internal transformer			24 V, via internal transformer		
Maximum start-up current (Un)*							
Standard unit	A	-	66	102	-	67	103
Unit with electronic starter option	A	47	-	-	48	-	-
Unit power factor at maximum capacity**		0,82	0,82	0,82	0.82	0.82	0.82
Maximum unit power input**	kW	6,4	5,9	8,8	6,5	6,0	8,9
Nominal unit current draw***	A	22,9	7,9	12,4	24,0	9,0	13,5
Maximum unit current draw (Un)****	A	30,7	10,8	16,0	31,8	11,9	17,1
Maximum unit current draw (Un-10%)†	A	36,4	11,9	16,6	37,5	13,0	17,7

* Maximum instantaneous start-up current (maximum operating current of the compressor + fan current + locked rotor current of the compressor).
** Power input, compressor and fan, at the unit operating limits (saturated suction temperature 10°C, saturated condensing temperature 65°C) and nominal voltage of 400 V (data given on the unit nameplate).
*** Standardised Eurovent conditions: condenser entering/leaving water temperature = 40°C/45°C, outside air temperature db/wb = 7°C/6°C.
**** Maximum unit operating current at maximum unit power input and 400 V (values given on the unit nameplate).
† Maximum unit operating current at maximum unit power input and 360 V.

Type key

61 A F - 0 14 P 7 B - - - - A

- Range
- Standard version
- Nominal capacity
- X - Without hydronic module
  P - With variable speed circulator without expansion tank
- 7 - Single phase power supply (230/1+N/50) (Only size 14)
  9 - Power supply with neutral cable (400/3+N/50)
- - - Without gateway
  B - CCN Jbus gateway
  C - CCN Bacnet gateway
  D - CCN LONtalk gateway
- - - Standard
  A - Remote User Interface HMI (as accessory)
- - - Standard
  A - Master/Slave (lead/lag)
- - - New option (Not used)
- - - New option (Not used)
- - - Revision status

Accessories

Accessories	Description	Advantages	Use 61AF
Water filter	External water filter on the hydronic module	Water pump protection against circulating debris	61AF 014-019

Hydronic module (option)

The hydronic module option reduces the installation time.

The heat pump is factory-equipped with the main hydronic components required for the installation: screen filter, water pump, relief valve, water pressure transducer, flow switch.

The Pro-Dialog+ control allows integration of system and water pump protection devices (insufficient water flow rate).

The pump supplied with the hydronic module is a variablec speed pump. With variable speed flow, the system no longer requires the control valve at the unit outlet.

However, for applications with two-way valves a bypass system must be kept to guarantee the minimum flow rate. Pro-Dialog+ includes two operating modes:

- Constant pump speed
- Constant delta T control.

An automatic pump start-up algorithm protects the heat exchanger and the hydronic module piping against frost down to -20 °C.

The hydronic module option is integrated into the heat pump without increasing its dimensions and saves the space normally used for the water pump.

Hydronic module 61AF 014

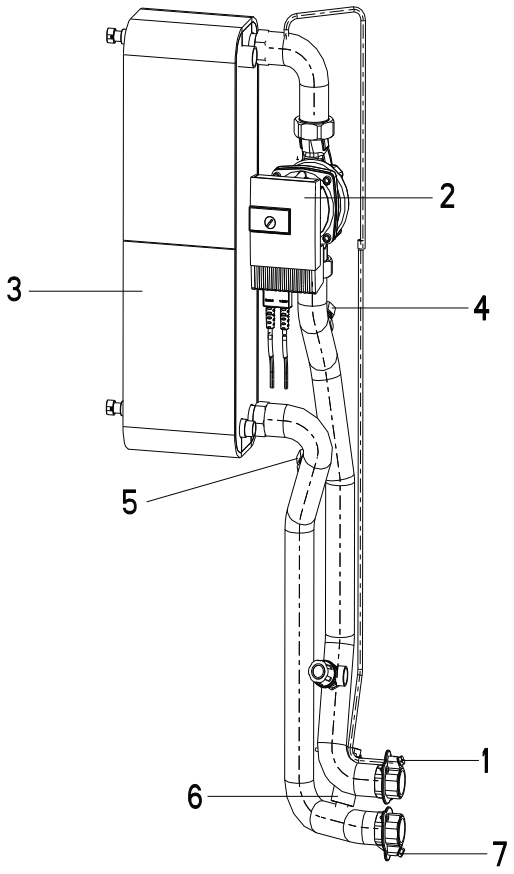

Legend

1 Air purge
2 Water pump
3 Brazed plate heat exchanger
4 Water pressure gauge
5 Water pressure gauge
6 Flow switch
7 Water drain

Hydronic module 61AF 019

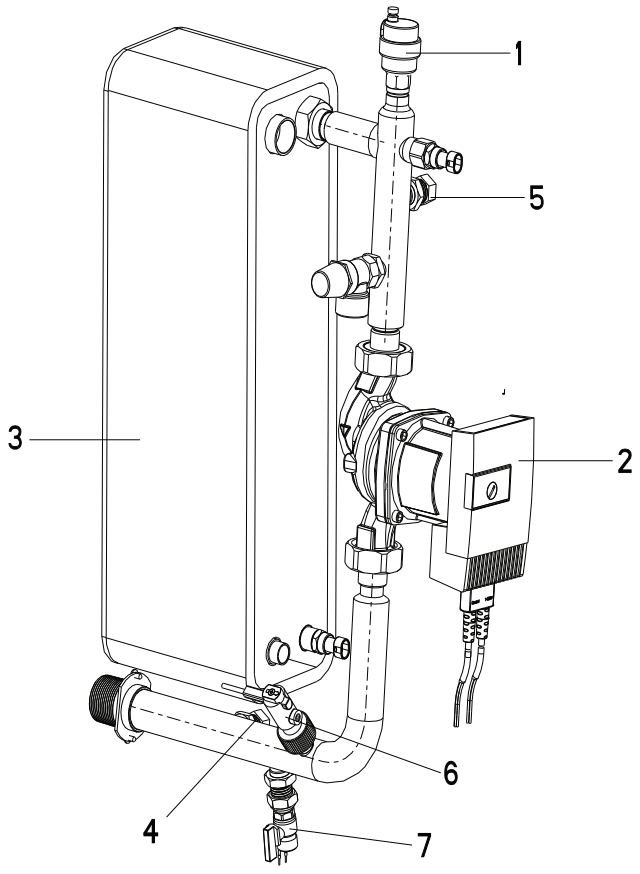

Legend

1 Air purge
2 Water pump
3 Brazed plate heat exchanger
4 Water pressure gauge
5 Water pressure gauge
6 Flow switch
7 Water drain

Features and advantages

Features

The main features of this product range are:

- Energy savings
  The 61AF range is certified to the Eurovent energy efficiency class A with a coefficient of performance (COP) of over 4. This complies with the COP required by the Ecolabel certification.
- Ease-of-installation
  The high-temperature AquaSnap heat pumps incorporate a hydronic module with a variable speed pump, in option.
- Easy integration
  The low noise levels of the 61AF heat pump and its very compact chassis reduce the noise disturbance from the unit.
- Application flexibility
  The operating range allows outside temperatures down to -20°C and leaving water temperatures up to 65°C for domestic hot water applications.
- Availability
  - Intelligent unit control permits unit operation in extreme conditions, minimising unit shut-down times.
  - Hot water production at 65°C is available continuously.

  Carrier quality is your guarantee for the safety and durability of the installation.

  The high-temperature heat pump range incorporates the latest technological features:
  - scroll compressors with vapour injection
  - low-noise fans made of a composite material
  - auto-adaptative microprocessor control
  - electronic expansion valve
  - multi-speed pump.

  The high-temperature AquaSnap heat pumps can be equipped with a hydronic module that is integrated into the heat pump chassis, limiting the installation to straight-forward operations like the wiring and the connection of the hot water supply and return piping.

Quiet operation

- Compressors
  - Low-noise scroll compressors with low vibration level.
  - The compressor assembly is installed on an independent chassis and supported by anti-vibration mountings.
  - Dynamic suction and discharge piping supports, minimising vibration transmission (Carrier patent).
- Evaporator section
  - Vertical evaporator coils
  - Protection grilles on anti-vibration mountings to protect the heat exchanger against possible shocks.
  - Latest-generation low-noise Flying Bird fans are now even quieter and do not generate intrusive low-frequency noise.
  - Rigid fan installation for reduced start-up noise.

Easy and fast installation

- Integrated hydronic module (option)
  - Variable speed water pump, based on the pressure loss of the hydronic installation.
  - Water filter protects the water pump against circulating debris (option).
  - Overpressure valve, set to 3 bar for the 61AF 014 and to 4 bar for the 61AF 019.
  - Thermal insulation and frost protection down to -20°C, using an electric resistance heater.
- Physical features
  - The unit has a small footprint and a low height (1103 mm for the 61AF 014 and 1550 mm for the 61AF 019), allowing it to blend in with any architectural styles.
  - The unit is enclosed by easily removable panels, covering all components (except condensers and fans).
- Simplified electrical connections
  - Single power supply point with neutral.
  - Main disconnect switch with high trip capacity (standard only for 61AF 019).
  - Transformer for safe 24 V control circuit supply included.
- Fast commissioning
  - Systematic factory operation test before shipment.
  - Quick-test function for step-by-step verification of the instruments, electrical components and motors.

Economical operation

- Increased energy efficiency
  - The exceptional energy efficiency level (COP) of the high-temperature AquaSnap heat pumps in the heating mode is the result of a long qualification and optimisation process.
  - The electronic expansion device (EXV) allows operation at a lower condensing pressure (COP optimisation).
  - Dynamic superheat management for better utilisation of the condenser surface.
- Reduced maintenance costs
  - Maintenance-free scroll compressors with vapour injection.
  - Pro-Dialog+ control offers fast diagnosis of possible incidents and their history.

Environmentally balanced

- Non-ozone depleting R-407C refrigerant
  - Chlorine-free refrigerant of the HFC group with zero ozone depletion potential.
  - Very efficient - ensures an increased energy efficiency ratio (COP).
- Leak-tight refrigerant circuit
  - Brazed refrigerant connections for increased leak-tightness.
  - Reduction of leaks due to elimination of capillary tubes (TXVs).
  - Verification of pressure transducers and temperature sensors without transferring refrigerant charge.

Superior reliability

- State-of-the-art concept
  - Cooperation with specialist laboratories and use of limit simulation tools (finite element calculations) for the design of the critical components, e.g. motor supports, suction/discharge piping etc.
- Auto-adaptive control
  - Control algorithm prevents excessive compressor cycling.
- Exceptional endurance tests
  - Corrosion resistance tests in salt mist in the laboratory.
  - Accelerated ageing test on components that are submitted to continuous operation: compressor piping, fan supports.
  - Transport simulation test in the laboratory on a vibrating table.

Controls

Pro-Dialog+ control

Pro-Dialog+ combines intelligence with operating simplicity. The control constantly monitors all machine parameters and precisely manages the operation of compressors, expansion devices, fans and of the condenser water pump for optimum energy efficiency.

- Energy management
  - Seven-day internal time schedule clock: permits unit on/off control and operation at a second set point.
  - Set point reset based on the outside air temperature or the return water temperature or on the water heat exchanger delta T.
  - Master/slave control of two heat pumps operating in parallel with operating time equalisation and automatic change-over in case of a unit fault (option).
  - Start/stop based on the outside air temperature.
- Ease-of-use
  - The new backlighted LCD interface includes a manual control potentiometer to ensure legibility under any lighting conditions.
  - The information is displayed clearly in English, French, German, Italian and Spanish (for other languages please consult Carrier).
  - The Pro-Dialog+ navigation uses intuitive tree-structure menus, similar to the Internet browers. They are user-friendly and permit quick access to the principal operat-ing parameters: number of compressors operating, suction/discharge pressure, compressor operating hours, set point, air temperature, entering/leaving water temperature.
  - As standard the unit includes a board for the control of a boiler and four electric resistance heater stages.

Pro-Dialog+ operator interface

Remote operating mode with volt-free contacts (standard)

A simple two-wire communication bus between the RS485 port of the AquaSnap high-temperature heat pumps and the Carrier Comfort Network offers multiple remote control, monitoring and diagnostic possibilities.

Carrier offers a vast choice of control products, specially designed to control, manage and supervise the operation of a heating system. Please consult your Carrier representative for more information on these products.

- Start/stop: opening of this contact will shut down the heat pump.
- Dual set point: closing of this contact activates a second heating set point (example: unoccupied mode).
- Demand limit: closing of this contact limits the maximum heat pump capacity to a predefined value.
- User safety: this contact is connected in series with the water flow switch and can be used for any customer safety loop.
- Water pump control.
- Alert indication: this volt-free contact indicates the presence of a minor fault.
- Alarm indication: this volt-free contact indicates the presence of a major fault that has led to the shut-down of the refrigerant circuit.

Remote interface (accessory)

This accessory includes a box that can be mounted inside the building. The power supply is provided via a 220 V/24 V transformer supplied. This interface allows access to the same menus as the unit interface and can be installed up to 300 m from the 61AF unit.

Operating limits

Operating range

61AF		Minimum	Maximum
Condenser			
Entering water temperature at start-up	°C	8	57
Leaving water temperature during operation	°C	30	65
Entering/leaving water temperature difference	K	3	10
Evaporator			
Entering air temperature*	°C	-20	40

* Outside temperature: For transport and storage of the 61AF units the minimum and maximum allowable temperatures are -20°C and +50°C. It is recommended that these temperatures are used for transport by container.

Note: Do not exceed the maximum operating temperature.

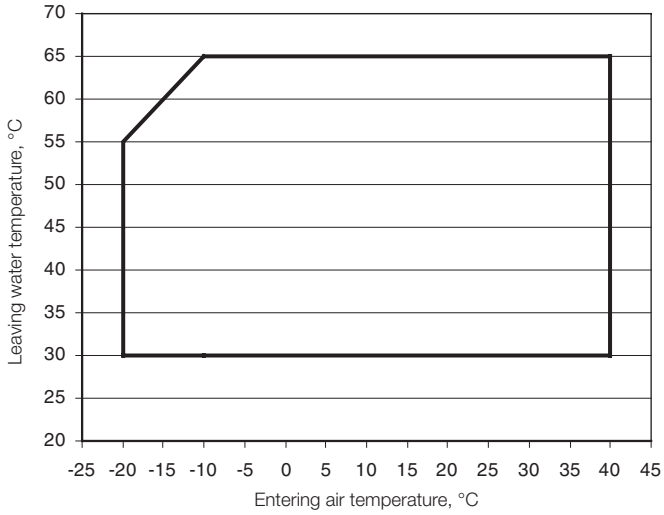

Full load

Plate heat exchanger water flow rate

61AF	Flow rate, l/s	
	Minimum	Maximum*
014-7	0.2	1.1
014-9	0.2	1.1
019	0.3	1.6

* Maximum flow rate at a water temperature difference of 3 K in the plate heat exchanger.

Note: For a domestic hot water application (leaving water temperature = 65°C), the water temperature difference must be at least 8 K.

Available static system pressure

Plate heat exchanger pressure drop - for pure water at 20°C

61AF 014-019

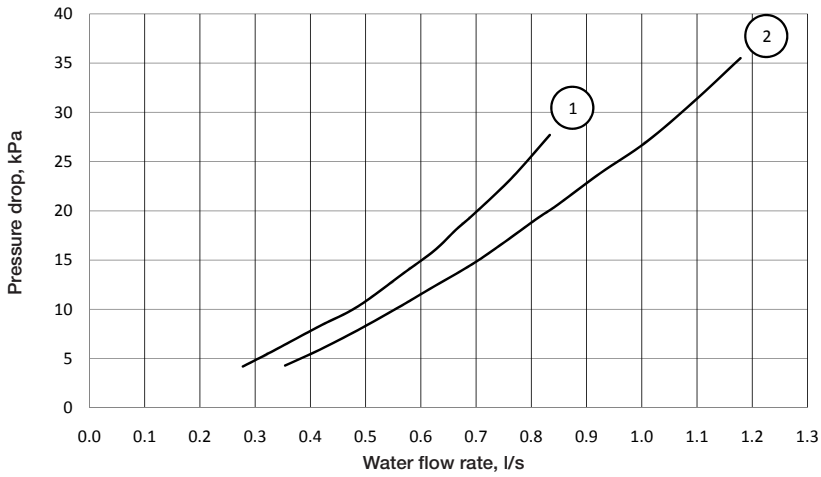

1 61AF 014
2 61AF 019

Available system pressure for units with pump

The available pressure curves for the 61AF units are given for the maximum variable speed.

Data applicable for:

- Fresh water 20 °C
- In case of use of glycol, the maximum water flow is reduced.

61AF	Condenser water flow rate, l/s	
	Minimum	Maximum*
014-7	0.2	1.1
014-9	0.2	1.1
019	0.3	1.3

* Maximum flow rate at a water temperature difference of 3 K in the plate heat exchanger

61AF 014

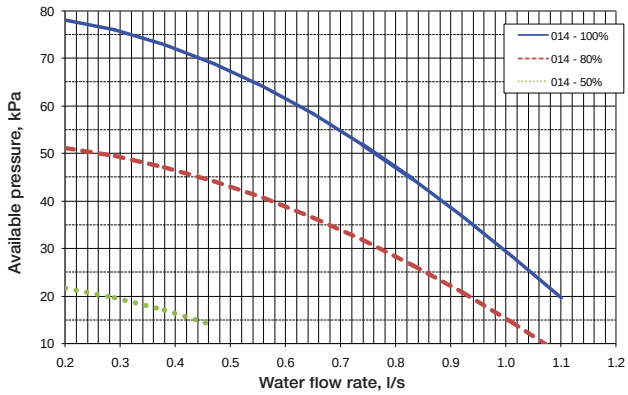

1 61AF 014 (speed 1)
2 61AF 014 (speed 2)
3 61AF 014 (speed 3): selected

61AF 019

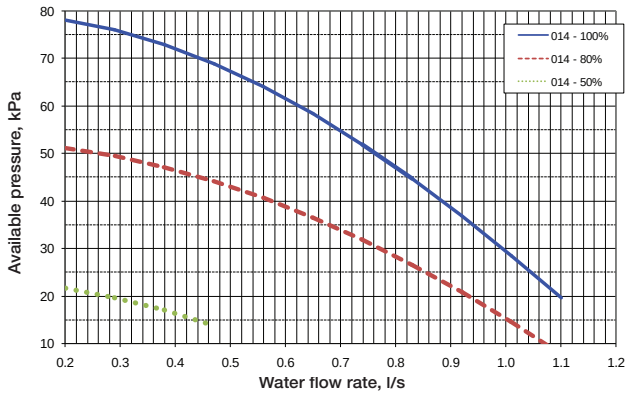

1 61AF 019 (speed 1)
2 61AF 019 (speed 2)
3 61AF 019 (speed 3): selected

Dimensions, mm

61AF 014 unit with and without hydronic module

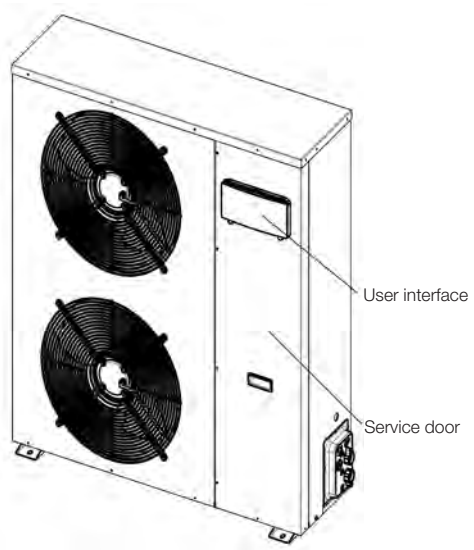

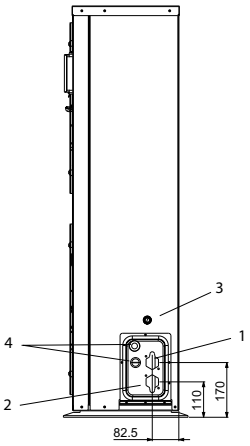

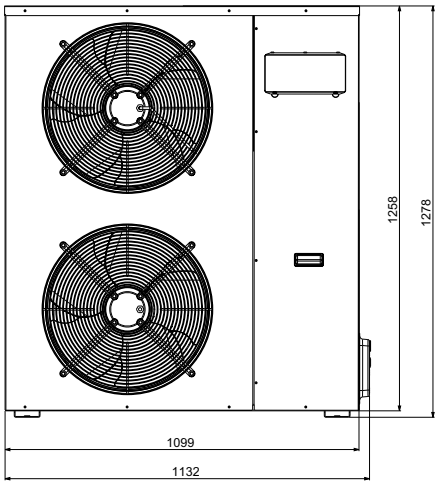

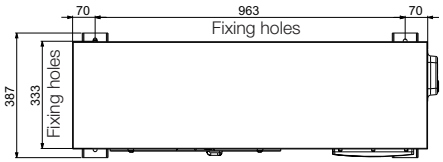

1. Water outlet
2. Water inlet
3. Safety valve outlet
4. Electrical connections

Clearances, mm

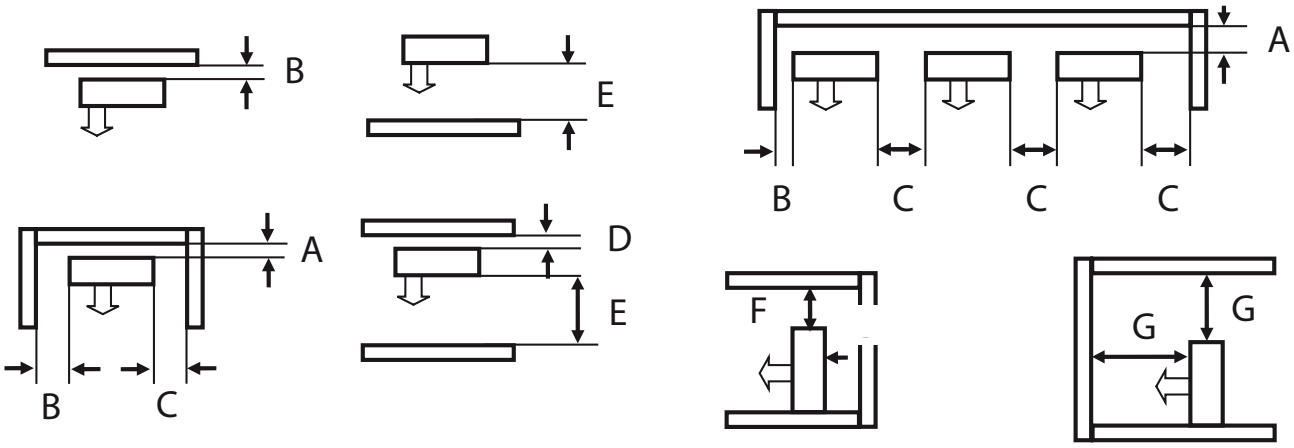

61AF 014	A	B	C	D	E	F	G
	100	250	500	100	670	400	670

Dimensions, mm

61AF 019 unit with and without hydronic module

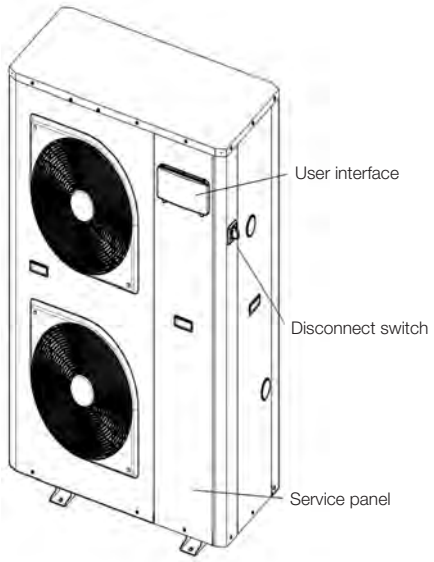

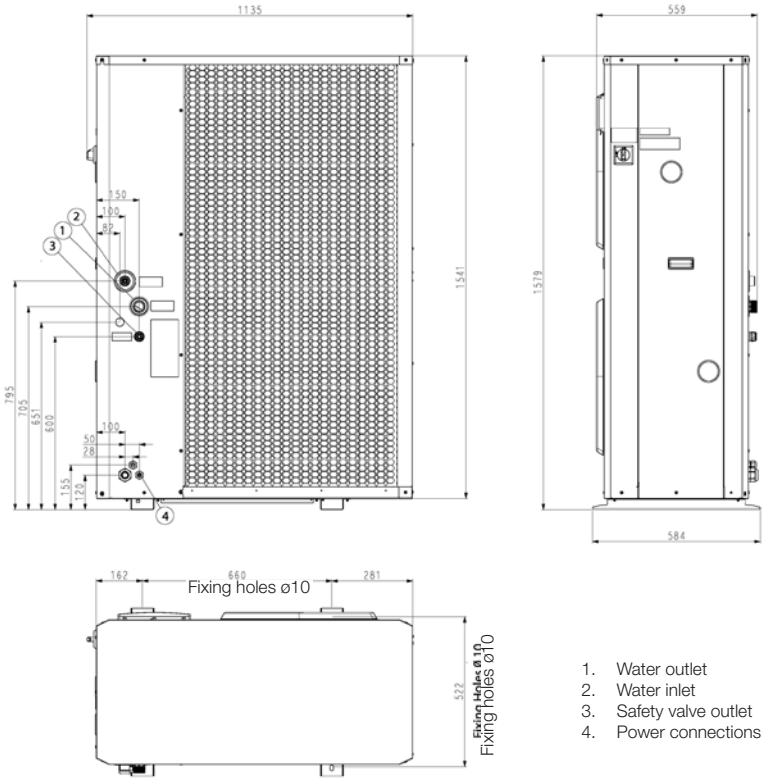

1. Water outlet
2. Water inlet
3. Safety valve outlet
4. Power connections

Clearances, mm

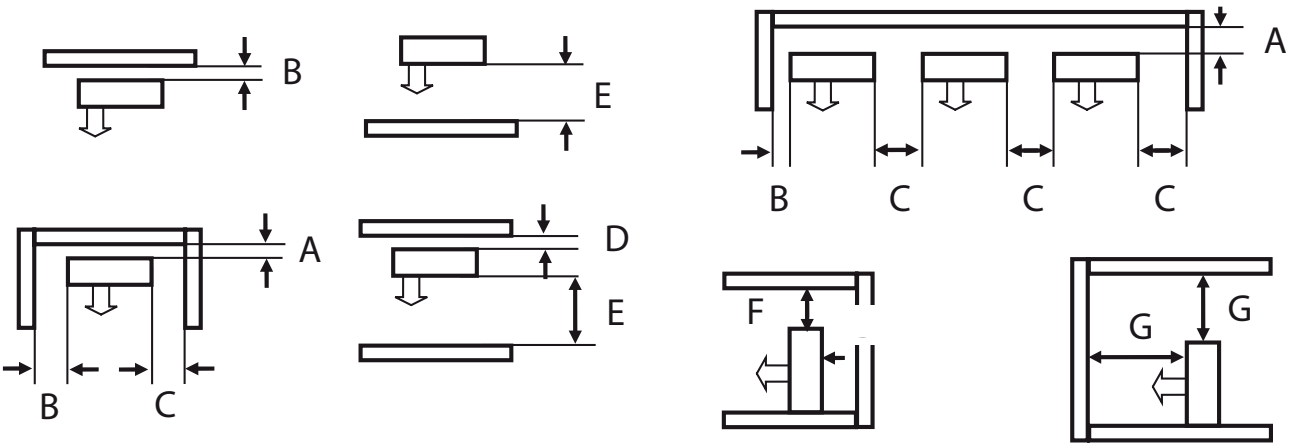

61AF 019	A	B	C	D	E	F	G
	300	200	400	200	700	500	1300

61AF

Nominal heating capacity 21-102 kW

HEATING

AQUASNAP Heating

61AF optimized for heating

Compact design

Plug & play approach

High temperature 65°C

The AquaSnap high-temperature heat pump range was designed for commercial applications such as the heating of offices, apartments and hotels as well as domestic hot water production in new and refurbished buildings.

The main features of this product range are:

- Energy savings: The 61AF range is certified to the Eurovent energy efficiency class A with a coefficient of performance (COP) of over 4. This complies with the COP required by the Ecolabel certification.
- Ease-of-installation: The high-temperature AquaSnap heat pumps incorporate an optional hydronic module with a multi-speed pump.
- Easy integration: The low noise levels of the 61AF heat pump and its very compact chassis reduce the noise disturbance from the unit.
- Application flexibility: The operating range allows outside temperatures down to -20°C and leaving water temperatures up to 65°C for domestic hot water applications.

Physical data

EUROVENT CERTIFIED PERFORMANCE
www.eurovent-certification.com

61AF				022	030	035	045	055	075	105
Heating										
Full load performances*	H1	Nominal capacity	kW	20.9	26.3	32.6	44.3	52.2	64.9	101.9
	H1	COP	kW/kW	4.15	4.19	4.14	4.4	4.39	3.98	4.25
	H1	Eurovent Energy Class		A	A	A	A	A	B	A
	H2	Nominal capacity	kW	20.8	25.8	32.4	43.9	52.4	66.8	102.0
	H2	COP	kW/kW	3.5	3.51	3.45	3.67	3.7	3.43	3.59
	H2	Eurovent Energy Class		A	A	A	A	A	A	A
	H3	Nominal capacity	kW	20.9	25.3	32.0	43.5	52.8	68.0	102.0
	H3	COP	kW/kW	3.05	3.05	3.0	3.21	3.22	3.01	3.13
	H4	Nominal capacity	kW	21.2	24.8	31.7	43.4	54.0	68.1	103.4
	H4	COP	kW/kW	2.56	2.56	2.52	2.69	2.71	2.54	2.64
Seasonal Efficiency**	H3	Energy Class		A+	A+	A+	A+	A+	A+	-
	H3	SCOP	kW/kW	2.68	2.7	2.77	2.98	3.01	2.8	2.96
		ηs heat	%	104.0	105.0	108.0	116.0	117.0	109.0	115.0
		Prated	KW	19.0	23.0	30.0	41.0	51.0	58.0	87.0
Sound Power Level Standard Unit			dB(A)	77.0	78.0	83.0	82.0	84.0	84.0	85.0
Operating weight†										
Standard unit without hydronic module			kg	343	396	421	509	533	900	1020
Standard unit with hydronic module option			kg	349	403	436	524	549	926	1044
Compressor				One, hermetic scroll 48.3 r/s				Two, hermetic scroll 48.3 r/s		
Refrigerant				R-407C						
Condenser				Direct-expansion plate heat exchanger						
Fan				Axial with rotating shroud, Flying Bird IV						
Quantity				1	1	1	1	1	2	2
Total air flow at high speed			l/s	3770	3748	3736	4035	4036	7479	8072
Evaporator				Grooved copper tubes and aluminium fins						
Refrigerant				R-407C						
Dimensions										
Length			mm	1110			1114		2273	
Depth			mm	1327			2100		2100	
Height			mm	1330			1330		1330	

H1 Heating mode conditions: Water heat exchanger water entering/leaving temperature 30°C/35°C, fouling factor 0 m² K/W. Outside air temperature 7°C db/6°C wb,
H2 Heating mode conditions: Water heat exchanger water entering/leaving temperature 40°C/45°C, fouling factor 0 m² K/W. Outside air temperature 7°C db/6°C wb,
H3 Heating mode conditions: Water heat exchanger water entering/leaving temperature 47°C/55°C, fouling factor 0 m² K/W. Outside air temperature 7°C db/6°C wb,
H4 Heating mode conditions: Water heat exchanger water entering/leaving temperature 55°C/65°C, fouling factor 0 m² K/W. Outside air temperature 7°C db/6°C wb,
* In accordance with standard EN14511-3:2013
** In accordance with standard EN14825:2013, average climate
† Weight shown is a guideline only.

Eurovent certified data

Electrical data

61AF - Standard unit (without hydronic module)		022	030	035	045	055	075	105
Power circuit								
Nominal power supply	V-ph-Hz	400-3-50 ± 10%						
Control circuit supply		24 V, via internal transformer						
Maximum start-up current (Un)*								
Standard unit	A	104	102	130	170	190	157	229
Unit with electronic starter option	A	56	55	70	91	101	101	142
Unit power factor at maximum capacity**		0.82	0.82	0.82	0.82	0.82	0.82	0.82
Maximum unit power input**	kW	8.7	11.6	12.9	14.6	16.8	25.8	33.7
Nominal unit current draw***	A	13.6	16.4	20.1	23.2	27.7	40.2	55.4
Maximum unit current draw (Un)****	A	16.8	21.1	27.0	32.8	38.8	54.0	77.6

* Maximum instantaneous start-up current at operating limit values (maximum operating current of the compressor + fan current + locked rotor current of the compressor).
** Power input, compressors and fan, at the unit operating limits (saturated suction temperature 10°C, saturated condensing temperature 65°C) and nominal voltage of 400 V (data given on the unit nameplate).
*** Standardised Eurovent conditions: condenser entering/leaving water temperature 40°C/45°C, outside air temperature 7°C/6°C.
**** Maximum unit operating current at maximum unit power input and 400 V (values given on the unit nameplate).

Options and accessories

Options	No.	Description	Advantages	Use 61AF
Corrosion protection, traditional coils	3A	Fins made of pre-treated aluminium (polyurethane and epoxy)	Improved corrosion resistance, recommended for moderate marine and urban environments	61AF 022-105
Unit with discharge air ducts	11	Fans with available pressure - max. 100 Pa	Enhances unit adjustment during installation (e.g. under a roof)	61AF 035-105
Low noise level	15	Aesthetic and sound absorbing compressor enclosure	Noise level reduction by 1 to 2 dB(A)	61AF 022-105
Very low noise level	15LS	Aesthetic and sound absorbing compressor enclosure associated with low-speed fans	Noise level reduction by 6 to 7 dB(A)	61AF 035-105
Soft Starter	25	Electronic starter on each compressor	Reduced start-up current	61AF 022-105
Frost protection down to -20°C	42	Electric heater on the hydronic module	Hydronic module frost protection at low outside temperatures	61AF 022-105 with option 116X
Master/slave operation	58	Unit equipped with supplementary water outlet temperature sensor kit to be	Optimised operation of two chillers connected in parallel with operating time equalisation	61AF 022-105
LP variable-speed single-pump	116X	field-installed allowing master/slave operation of two units connected in parallel	Easy and fast installation	61AF 022-105
J-Bus gateway	148B	See hydronic module chapter	Connects the unit by communication bus to a building management system	61AF 022-105
BacNet gateway	148C	Two-directional communication board complying with JBus protocol	Easy connection by communication bus to a building management system	61AF 022-105
Lon gateway	148D	Two-directional communication board complying with BacNet protocol	Connects the unit by communication bus to a building management system	61AF 022-105
Compliance with Russian regulations	199	Two-directional communication board complying with Lon Talk protocol	Conformance with Russian regulations	61AF 022-105
Condenser screw connection sleeves	265	EAC certification	Allows unit connection to a screw connector	61AF 035-105
Welded condenser water connection kit	267	Condenser inlet/outlet screw connection sleeves	Easy installation	61AF 035-105
Remote user interface	275	User interface for remote installation	Remote control of the unit and its operating parameters	61AF 022-105

Accessories	Description	Advantages	Use
00PPG000488000- Heating System Manager type A: controls one heat emitter type with an auxiliary electric heater or boiler	Additional control box not supplied with the unit, to be installed remotely	Heating system control facilitated	61AF 022-105
00PPG000488100- Heating System Manager type B: controls two heat emitter types (or independent zones) and domestic hot water production with an auxiliary electric heater or boiler	Additional control box not supplied with the unit, to be installed remotely	Heating system control facilitated	61AF 022-105
00PPG000488200- Heating System Manager type C: controls two heat emitter types (or independent zones) and domestic hot water production with a district heating system as auxiliary source	Additional control box not supplied with the unit, to be installed remotely	Heating system control facilitated	61AF 022-105

Units with fans with available pressure for indoor installation (option 11)

This option applies to 61AF units installed inside the building in a plant room. For this type of installation the cold air leaving the air-cooled evaporators is discharged by the fans to the outside of the building, using a duct system.

The installation of a duct system at the air evaporator discharge line causes a pressure drop due to the resistance caused by the air flow.

Therefore more powerful fan motors than those used for the standard units are installed in the units with this option. For each installation of a unit installed inside a plant room the duct pressure drops differ, depending on the duct length, duct section and direction changes.

61AF units equipped with fans with available pressure are designed to operate with air discharge ducts with maximum pressure drops of 100 Pa.

Fan discharge connection

A square flange is supplied mounted on the unit. An available standard round flange can easily be installed at the fan discharge, if the installer prefers the use of a round connection duct.

The unit is supplied with a grille on the discharge side. This grille has to be removed before connection to the duct system.

It is advisable to make the connection to the duct system with a flexible sleeve. If this recommendation is not observed, a lot of vibration and noise may be transmitted to the building structure.

Applicable rules for units incorporated into an air duct system

Ensure that the suction or discharge inlets are not accidentally obstructed by the panel positioning (e.g. low return or open doors etc.).

Hydronic module (option 116)

The hydronic module option reduces the installation time. The heat pump is factory-equipped with the main hydronic components required for the installation: screen filter, water pump, relief valve, water pressure transducer, flow switch.

The Pro-Dialog+ control allows integration of system and water pump protection devices (insufficient water flow rate, water pressure, water flow rate etc.).

The pump supplied with the hydronic module is a variable speed pump. With variable speed flow, the system no longer requires the control valve at the unit outlet.
However, for applications with two-way valves a bypass system must be kept to guarantee the minimum flow rate.

Pro-Dialog+ includes two operating modes:

- constant pump speed
- constant delta T control.

An automatic pump start-up algorithm protects the heat exchanger and the hydronic module piping against frost down to -10°C outside air temperature, as standard. If necessary, increased frost protection down to -20 °C is possible by adding heaters to the hydronic module piping (see option 42).

The hydronic module option is integrated into the heat pump without increasing its dimensions and saves the space normally used for the water pump.

Hydronic module

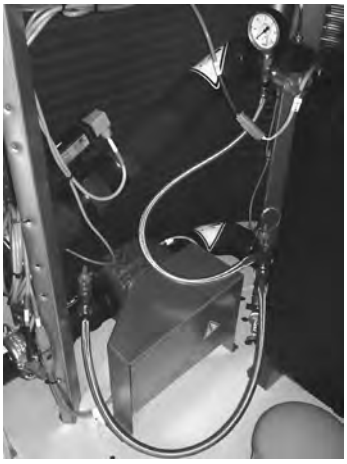

Typical hydronic circuit diagram

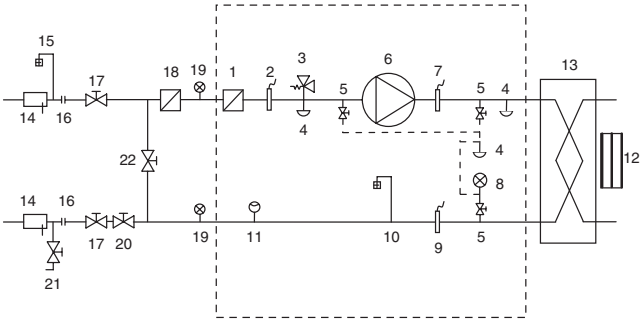

Legend

Components of the unit and hydronic module

1 Victaulic screen filter
2 Pressure sensor
Note: Gives pump suction pressure information (see installation manual)
3 Safety valve
4 Water drain valve
5 Shut-off valve
6 Water pump
7 Temperature sensors, BPHE inlet
Note: Gives heat exchanger entering temperature information (see installation manual)
8 Pressure gauge
Note: Allows measuring of the pump suction pressure, the pump leaving pressure and the heat exchanger leaving pressure
9 Temperature sensor, BPHE outlet
Note: Gives heat exchanger leaving temperature information (see installation manual)
10 Automatic air vent
11 Flow switch
12 Plate heat exchanger frost protection heater
13 Plate heat exchanger

Installation components

14 Temperature probe well
15 Air vent
16 Flexible connection
17 Shut-off valve
18 Screen filter (obligatory for a unit without hydronic module)
19 Pressure gauge
20 Water flow control valve
21 Charge valve
22 Frost protection bypass valve (when shut-off valves [17] are closed during winter)

--- Hydronic module (unit with hydronic module)

Notes:

- Units without hydronic module (standard units) are equipped with a flow switch and two temperature sensors (7 and 9).
- For units equipped with hydronic module, the pressure sensor located upstream of the pump to prevent cavitation is installed on a connection without Schraeder valves. Depressurise and drain the system before any intervention.

Heating System Manager (HSM)

This accessory allows improved integration of the 61AF heat pump to maximise the energy efficiency performance. With three system levels for nine typical configurations, most heating only applications are covered - from the simplest to the most complex, such as interfacing with a district heating system.

Each of these accessory configurations is described in detail the installation manual for this accessory:

- Choice of control options (on/off volt-free contact or 0-10 V signal for increased performance),
- Domestic hot water production temperature control and distribution.

The control box can supply all auxiliary devices such as the circulating pumps or the mixing or switching valves.

The heat pump is controlled by a CCN bus and the control box includes an NRCP2-BASE board, a ProDialog interface as well as all required sensors.

Control box

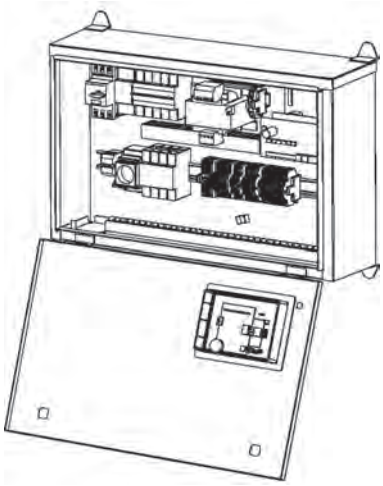

Control box dimensions

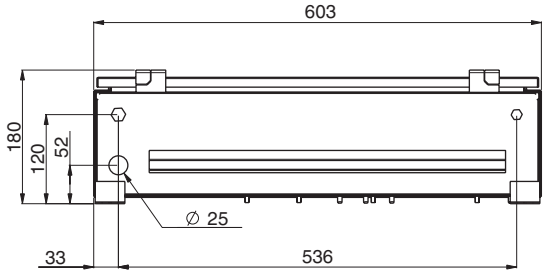

Installation safety notes

- The hydronic installation must be carried out by qualified personnel in accordance with applicable laws and following standard accepted practices.
- The hydronic installation must be regularly serviced.
- An incorrect hydronic installation that does not comply with the safety, electrical and thermal standards, as well as lacking/poor maintenance can lead to excessive pressures and cause piping breaks.

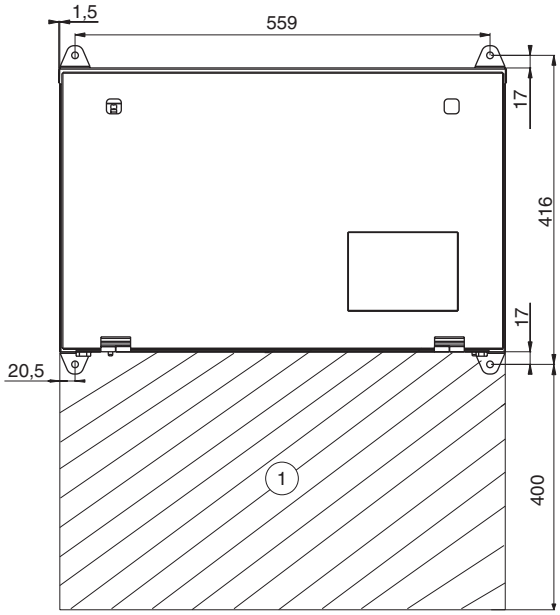

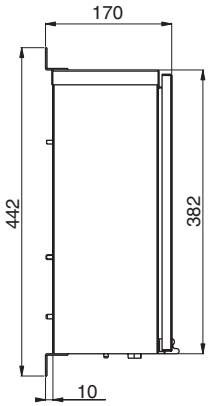

Legend:
All dimensions are in mm.

① Clearance required to open the door and for customer connection

Accessory 00PPG000488000- Heating System Manager type A

- Heating System Manager: one heat emitter type with supplementary electric heater or boiler:
  - Allows control of a non-reversible heating system that includes a 61AF heat pump and a single heat emitter type or a single comfort zone. For optimised energy efficiency the heat pump is controlled by a configurable weather compensation system. The control box controls a supplementary electric heater or a standy-by boiler. The control box supplies power to the circulating pumps.

Heating system example: one heat emitter type with supplementary electric heating or stand-by boiler

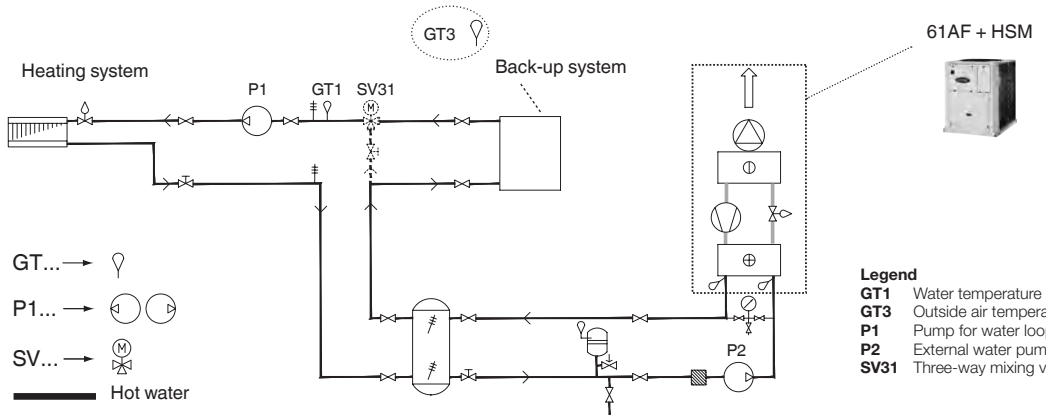

Legend
GT1 Water temperature loop 1
GT3 Outside air temperature
P1 Pump for water loop 1 (radiators)
P2 External water pump for the heat pump
SV31 Three-way mixing valve for the back-up heater

Accessory 00PPG000488100- Heating System Manager type B

- Heating System Manager (as accessory 00PPG000488000-) two heat emitter types or independent zones and domestic hot water production:
  - Allows control of a non-reversible heating system that includes a 61AF heat pump and two different heat emitter types and/or two independent comfort zones. For optimised energy efficiency the heat pump is controlled by a configurable weather compensation system. The control box controls a supplementary electric heater or a standy-by boiler. The control box supplies power to the circulating pumps. Hot-water production can be permanent or programmable with a second setpoint at the heat pump and control of a switching valve.

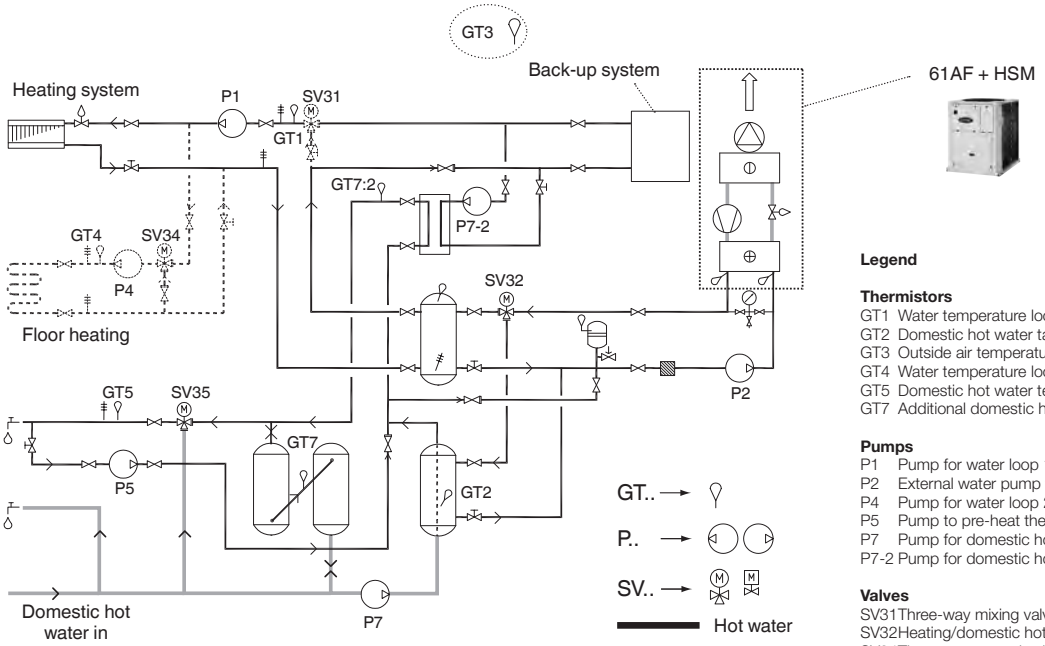

Legend

Thermistors
GT1 Water temperature loop 1
GT2 Domestic hot water tank temperature
GT3 Outside air temperature
GT4 Water temperature loop 2
GT5 Domestic hot water temperature
GT7 Additional domestic hot water tank temperature

Pumps
P1 Pump for water loop 1 (radiators)
P2 External water pump for the heat pump
P4 Pump for water loop 2 (floor heating)
P5 Pump to pre-heat the domestic hot water valve loop
P7 Pump for domestic hot water circulation
P7-2 Pump for domestic hot water circulation in an aditional tank

Valves
SV31 Three-way mixing valve for the back-up heater
SV32 Heating/domestic hot water change-over valve
SV34 Three-way control valve for water loop 2
SV35 Three-way mixing valve for domestic hot water

Notes:
This application example includes two zones and a supplementary boiler and domestic hot-water production.
The installation includes a switching valve (SV32) that allows switching from the heat pump capacity of the heating system to domestic hot-water production.
The primary heating circuit is the domestic hot-water production circuit. It includes a tank with an equivalent pressure drop to simplify system balancing.

Accessory 00PPG000488200- Heating System Manager type C

- Heating System Manager (as accessory 00PPG000488100-) with the possibility to obtain additional heating and domestic hot-water production capacity from a district heating system:
  - Allows control of a non-reversible heating system that includes a 61AF heat pump and two different heat emitter types and/or two independent comfort zones. For optimised energy efficiency the heat pump is controlled by a configurable weather compensation system. The control box controls the heating and/or domestic hot-water production support from a district heating system. The control box supplies power to the circulating pumps. Hot-water production can be permanent or programmable with a second setpoint at the heat pump and control of a switching valve.

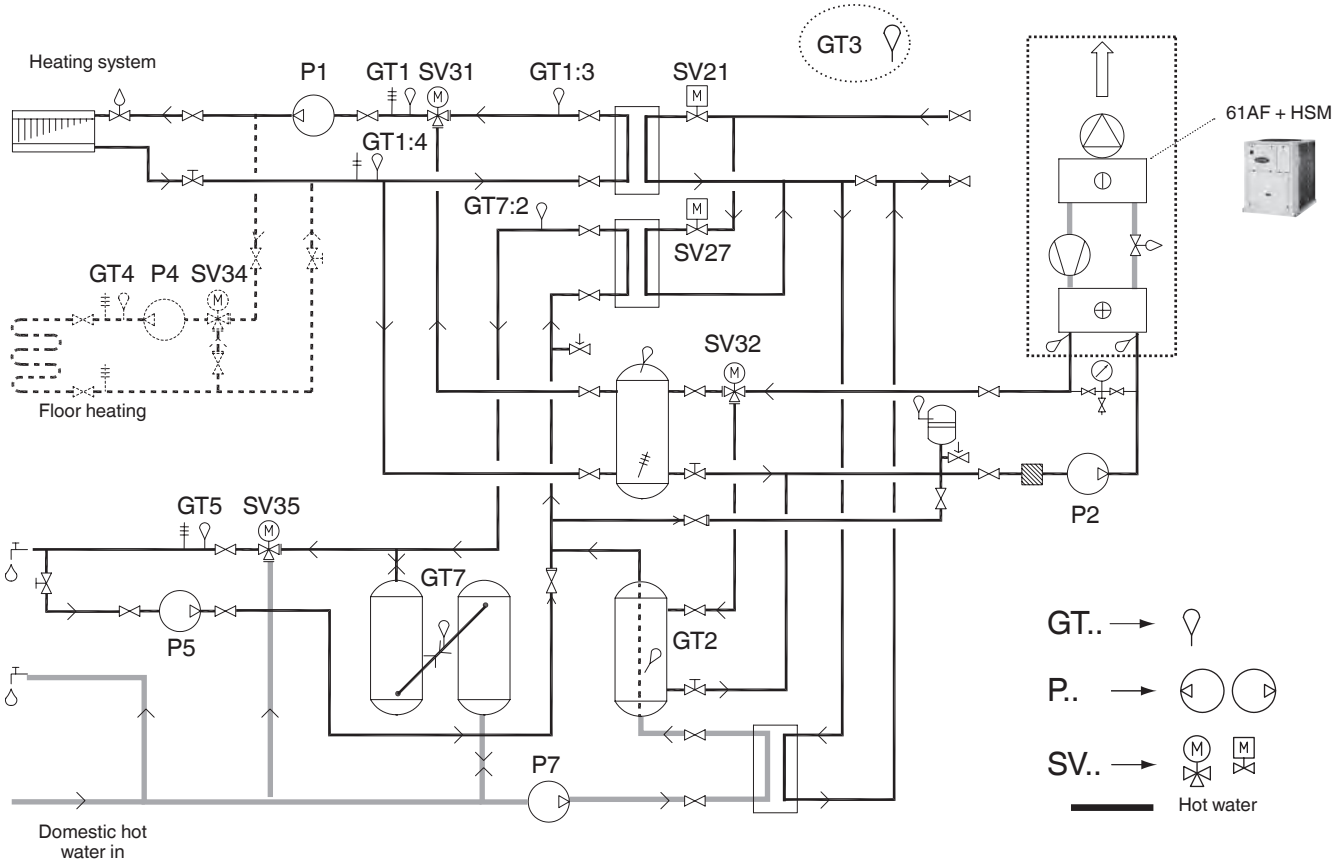

Legend

Thermistors
GT1 Water temperature loop 1
GT1:3 Heat exchanger leaving water temperature, district heating
GT1:4 Heat exchanger entering water temperature, district heating
GT2 Domestic hot water tank temperature
GT3 Outside air temperature
GT4 Water temperature loop 2
GT5 Domestic hot water temperature
GT7 Additional domestic hot water tank temperature
GT7:2 Back-up heat exchanger temperature for domestic hot water

Pumps
P1 Pump for water loop 1 (radiators)
P2 External water pump for the heat pump
P4 Pump for water loop 2 (floor heating)
P5 Pump to pre-heat the domestic hot water valve loop
P7 Pump for domestic hot water circulation

Valves
SV21 Valve for district heating heat exchanger for heating
SV27 Valve for district heating heat exchanger for domestic hot water
SV31 Three-way mixing valve for the back-up heater
SV32 Heating/domestic hot water change-over valve
SV34 Three-way control valve for water loop 2
SV35 Three-way mixing valve for domestic hot water

Features and advantages

Features

The main features of this product range are:

- Energy savings
  The 61AF range is certified to the Eurovent energy efficiency class A with a coefficient of performance (COP) of over 4. This complies with the COP required by the Ecolabel certification.
- Ease-of-installation
  The high-temperature AquaSnap heat pumps incorporate an optional hydronic module with a multi-speed pump.
- Easy integration
  The low noise levels of the 61AF heat pump and its very compact chassis reduce the noise disturbance from the unit.
- Application flexibility
  The operating range allows outside temperatures down to -20°C and leaving water temperatures up to 65°C for domestic hot water applications.
  - Intelligent unit control permits unit operation in extreme conditions, minimising unit shut-down times.
  - Hot water production at 65°C is available continuously.

Carrier quality is your guarantee for the safety and durability of the installation.

The AquaSnap high-temperature heat pumps incorporate the latest technological features:

- scroll compressors with vapour injection
- low-noise fans made of a composite material
- auto-adaptative microprocessor control
- electronic expansion valve
- multi-speed pump.

The AquaSnap high-temperature heat pumps can be equipped with a hydronic module that is integrated into the heat pump chassis, limiting the installation to straight-forward operations like the wiring and the connection of the hot water supply and return piping.

Quiet operation

- Compressors
  - Low-noise scroll compressors with low vibration level.
  - The compressor assembly is installed on an independent chassis and supported by anti-vibration mountings.
  - Dynamic suction and discharge piping supports, minimising vibration transmission (Carrier patent).
- Evaporator section
  - Vertical evaporator coils
  - Protection grilles on anti-vibration mountings to protect the heat exchanger against possible shocks.
  - Latest-generation low-noise Flying Bird fans, made of a composite material (Carrier patent), are now even quieter and do not generate intrusive low-frequency noise.
  - Rigid fan installation for reduced start-up noise (Carrier patent).

Easy and fast installation

- Integrated hydronic module (option)
  - Multi-speed centrifugal water pump, based on the pressure loss of the hydronic installation.
  - Water filter protects the water pump against circulating debris.
  - Pump protected against cavitation by a pressure transducer that measures the entering water pressure.
  - Overpressure valve, set to 4 bar.
  - Thermal insulation and frost protection down to -20°C, using an electric resistance heater (see table of options).
- Physical features
  - The unit has a small footprint and a low height (1329 mm) allowing it to blend in with any architectural styles.
  - The unit is enclosed by easily removable panels, covering all components (except condensers and fans).
- Simplified electrical connections
  - Single power supply point without neutral.
  - Main disconnect switch with high trip capacity.
  - Transformer for safe 24 V control circuit supply included.
- Fast commissioning
  - Systematic factory operation test before shipment.
  - Quick-test function for step-by-step verification of the instruments, electrical components and motors.

Economical operation

- Increased energy efficiency
  - Eurovent energy efficiency class A (in accordance with EN14511-3:2011).
  - The exceptional energy efficiency level (COP) of the high-temperature AquaSnap heat pumps in the heating mode is the result of a long qualification and optimisation process.
  - The electronic expansion device (EXV) allows operation at a lower condensing pressure (COP optimisation).
  - Dynamic superheat management for better utilisation of the condenser surface.
- Reduced maintenance costs
  - Maintenance-free scroll compressors with vapour injection.
  - Pro-Dialog+ control offers fast diagnosis of possible incidents and their history.

Environmentally balanced

- Non ozone depleting R-407C refrigerant
  - Chlorine-free refrigerant of the HFC group with zero ozone depletion potential.
  - Very efficient - ensures an increased energy efficiency ratio (COP).
- Leak-tight refrigerant circuit
  - Brazed refrigerant connections for increased leak-tightness.
  - Reduction of leaks due to elimination of capillary tubes (TXVs).
  - Verification of pressure transducers and temperature sensors without transferring refrigerant charge.

Superior reliability

- State-of-the-art concept
  - Cooperation with specialist laboratories and use of limit simulation tools (finite element calculations) for the design of the critical components, e.g. motor supports, suction/discharge piping etc.
- Auto-adaptive control
  - Control algorithm prevents excessive compressor cycling and permits reduction of the water quantity in the hydronic circuit (Carrier patent).
- Exceptional endurance tests
  - Corrosion resistance tests in salt mist in the laboratory.
  - Accelerated ageing test on components that are submitted to continuous operation: compressor piping, fan supports.
  - Transport simulation test in the laboratory on a vibrating table.

Flying Bird IV fan

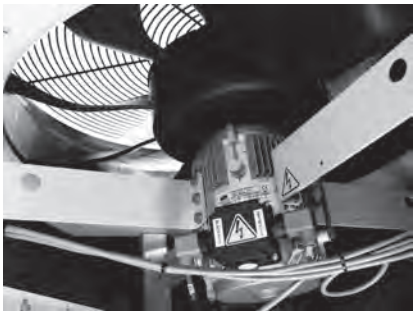

Controls

Pro-Dialog+ control

Pro-Dialog+ combines intelligence with operating simplicity. The control constantly monitors all machine parameters and precisely manages the operation of compressors, expansion devices, fans and of the condenser water pump for optimum energy efficiency.

- Energy management
  - Seven-day internal time schedule clock: permits unit on/off control and operation at a second set point.
  - Set point reset based on the outside air temperature or the return water temperature or on the water heat exchanger delta T.
  - Master/slave control of two heat pumps operating in parallel with operating time equalisation and automatic change-over in case of a unit fault (option).
  - Start/stop based on the outside air temperature.
- Ease-of-use
  - The new backlighted LCD interface includes a manual control potentiometer to ensure legibility under any lighting conditions.
  - The information is displayed clearly in English, French, German, Italian and Spanish (for other languages please consult Carrier).
  - The Pro-Dialog+ navigation uses intuitive tree-structure menus, similar to the Internet browers. They are user-friendly and permit quick access to the principal operat-ing parameters: number of compressors operating, suction/discharge pressure, compressor operating hours, set point, air temperature, entering/leaving water temperature.
  - As standard the unit includes a board for the control of a boiler and four electric resistance heater stages.

Pro-Dialog+ operator interface

Remote operating mode with volt-free contacts (standard)

A simple two-wire communication bus between the RS485 port of the AquaSnap high-temperature heat pumps and the Carrier Comfort Network offers multiple remote control, monitoring and diagnostic possibilities.

Carrier offers a vast choice of control products, specially designed to control, manage and supervise the operation of a heating system. Please consult your Carrier representative for more information on these products.

- Start/stop: opening of this contact will shut down the heat pump.
- Dual set point: closing of this contact activates a second heating set point (example: unoccupied mode).
- Demand limit: closing of this contact limits the maximum heat pump capacity to a predefined value.

- User safety: this contact is connected in series with the water flow switch and can be used for any customer safety loop.
- Water pump control.
- Alert indication: this volt-free contact indicates the presence of a minor fault.
- Alarm indication: this volt-free contact indicates the presence of a major fault that has led to the shut-down of the refrigerant circuit.

Remote interface (accessory)

This accessory includes a box that can be mounted inside the building. The power supply is provided via a 220 V/24 V transformer supplied. This interface allows access to the same menus as the unit interface and can be installed up to 300 m from the 61AF unit.

Operating limits

Operating range

61AF		Minimum	Maximum
Condenser			
Entering water temperature at start-up	°C	8	57
Leaving water temperature during operation	°C	30	65
Entering/leaving water temperature difference	K	3	**
Evaporator			
Entering air temperature, standard unit*	°C	-20	40
Entering air temperature, unit with option 11	°C	-15	40

* Outside temperature: For transport and storage of the 61AF units the minimum and maximum allowable temperatures are -20°C and +50°C. It is recommended that these temperatures are used for transport by container.
** Refer to the minmum unit flow rate.

Note: Do not exceed the maximum operating temperature.

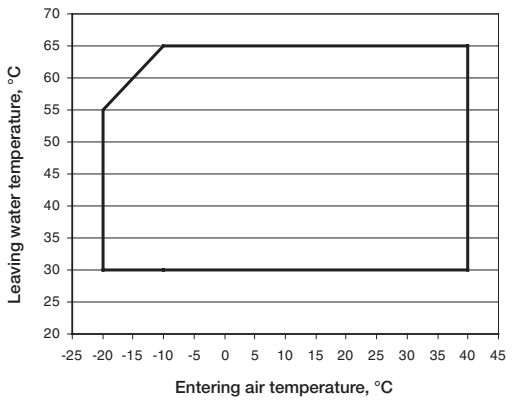

Full load

Plate heat exchanger water flow rate

61AF	Maximum* with hydronic module	Maximum** without hydronic module
022	1.6	1.8
030	1.7	2.4
035	3.3	3.1
045	3.3	3.8
055	3.2	4.6
075	5.9	6.4
105	6.1	8.5

* Maximum flow rate at an available pressure of 15 kPa.
** Maximum flow rate at a water temperature difference of 3 K in the plate heat exchanger.

Note: For a domestic hot water application (leaving water temperature = 65°C), the water temperature difference must be at least 8 K for operation at 100% capacity.

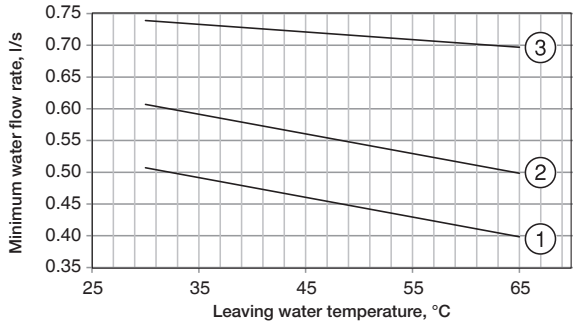

1 61AF 022
2 61AF 030
3 61AF 035

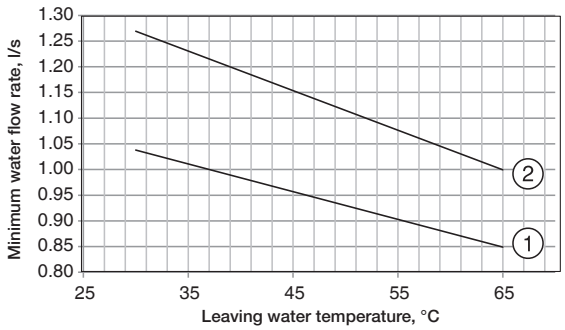

1 61AF 045
2 61AF 055

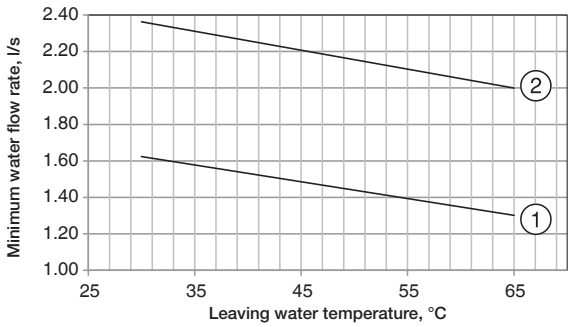

1 61AF 075
2 61AF 105

Available static system pressure

Plate heat exchanger pressure drop - for pure water at 20°C

61AF 022-045

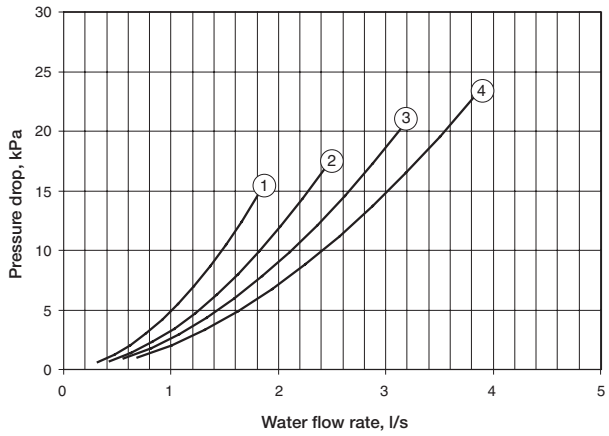

1	61AF 022	3	61AF 035
2	61AF 030	4	61AF 045

61AF 055-105

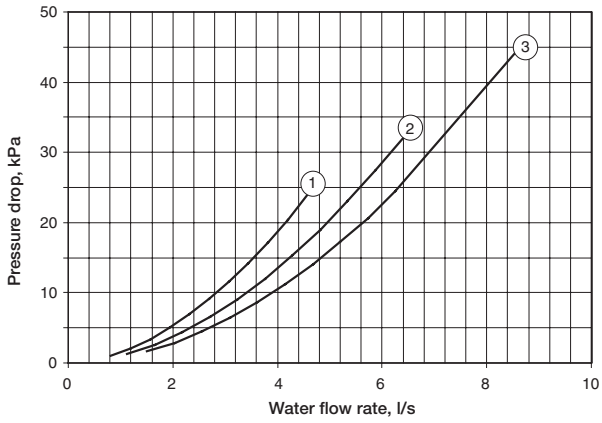

1	61AF 055	3	61AF 105
2	61AF 075		

Available system pressure for units with hydronic module

The available pressure curves for the 61AF units are given for the maximum variable speed.

Data applicable for:

- Fresh water 20 °C
- In case of use of glycol, the maximum water flow is reduced.

61AF 022-035

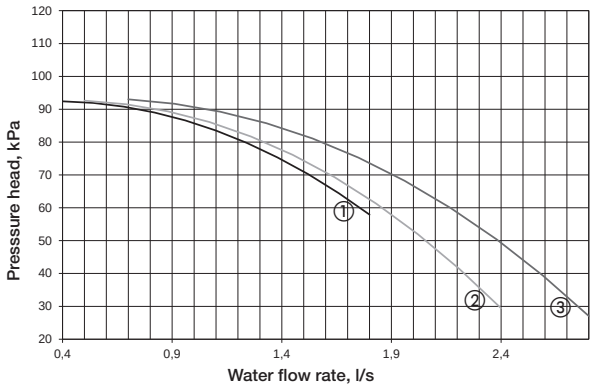

1	61AF 022
2	61AF 030
3	61AF 035

61AF 045-055

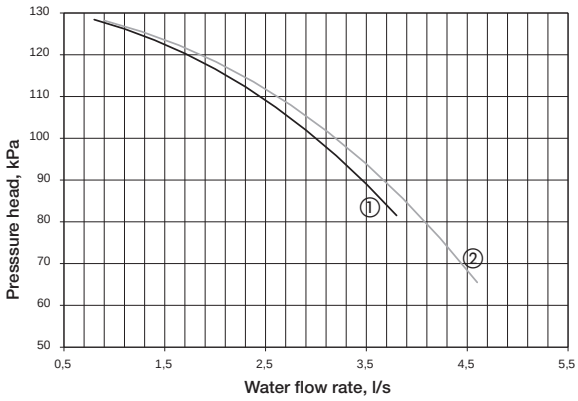

1	61AF 045
2	61AF 055

61AF 075-105

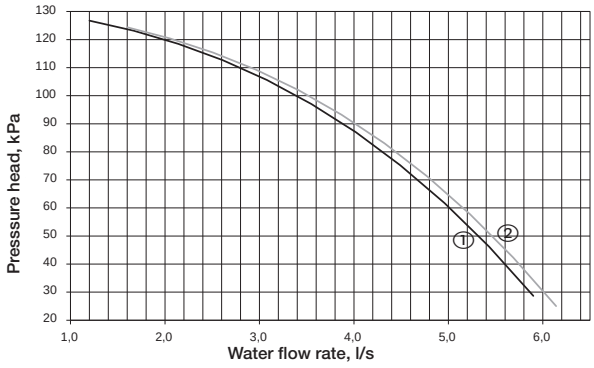

1	61AF 075
2	61AF 105

Dimensions/clearances

61AF 022-035 units with and without hydronic module

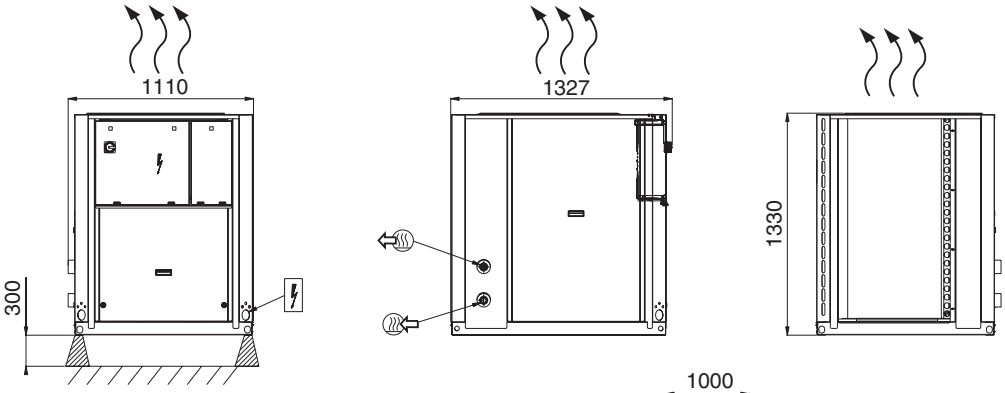

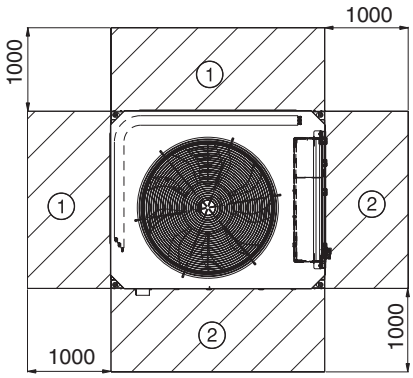

Legend

All dimensions are in mm

- (1) Required clearances for air flow
- (2) Recommended space for maintenance
- Water inlet
- Water outlet
- Air outlet, do not obstruct
- Control box
- Power cable connection

61AF 045-055 units with and without hydronic module

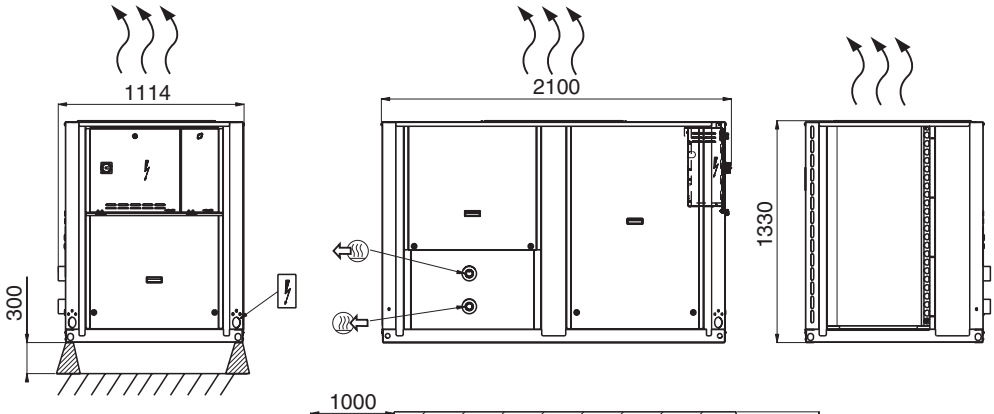

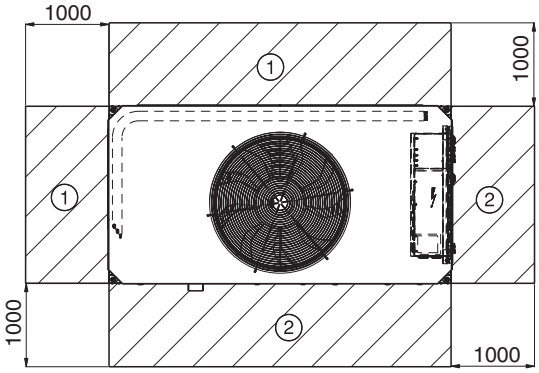

Notes:

A Non-certified drawings.
Refer to the certified dimensional drawings supplied with the unit or available on request, when designing an installation. For the location of fixing points, weight distribution and coordinates of the centre of gravity refer to the certified dimensional drawings.

B In multiple-unit installations (maximum four units), the side clearance between the units should be increased from 1000 to 2000 mm.

C The height of the solid surface must not exceed 2 m.

61AF 075-105 units with and without hydronic module

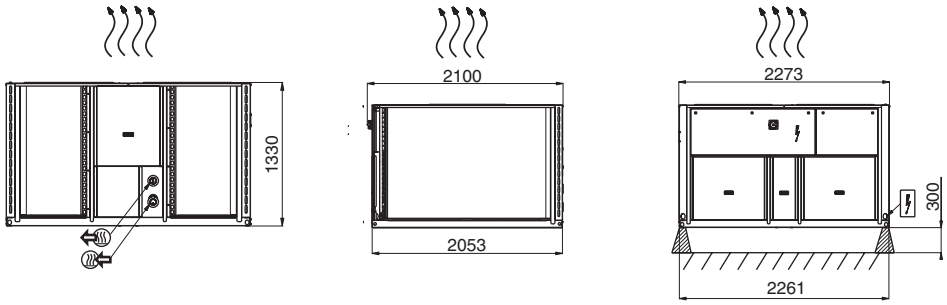

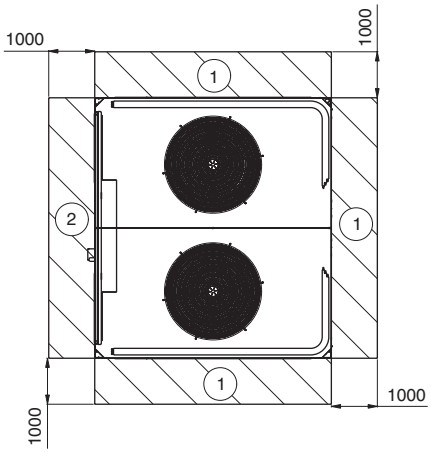

Legend

All dimensions are in mm

- (1) Required clearances for air flow
- (2) Recommended space for maintenance
- Water inlet
- Water outlet
- Air outlet, do not obstruct
- Control box
- Power cable connection

61AF 022-035 with option 11, units with and without hydronic module

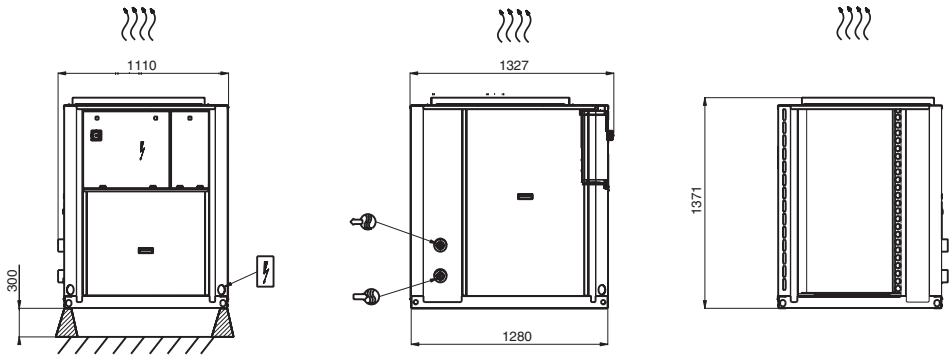

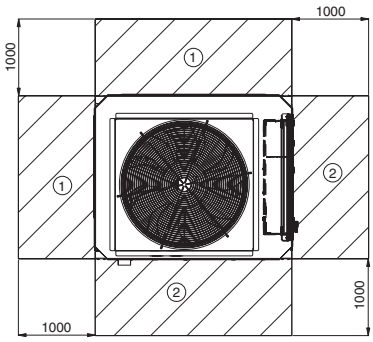

Notes:

A Non-certified drawings.
Refer to the certified dimensional drawings supplied with the unit or available on request, when designing an installation. For the location of fixing points, weight distribution and coordinates of the centre of gravity refer to the certified dimensional drawings.

B In multiple-unit installations (maximum four units), the side clearance between the units should be increased from 1000 to 2000 mm.

C The height of the solid surface must not exceed 2 m.

61AF 045-055 with option 11, units with and without hydronic module

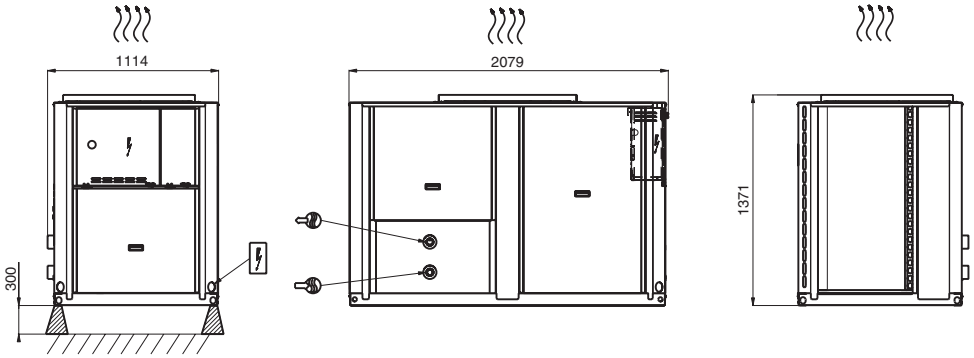

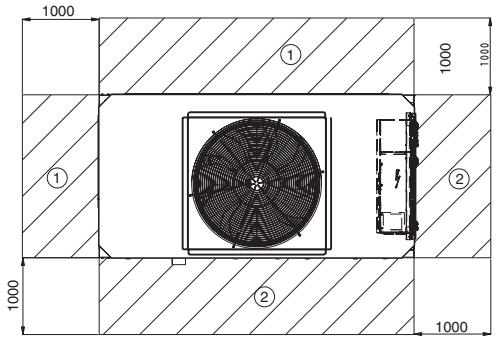

Legend

All dimensions are in mm

- (1) Required clearances for air flow
- (2) Recommended space for maintenance
- Water inlet
- Water outlet
- Air outlet, do not obstruct
- Control box
- Power cable connection

61AF 075-105 with option 11, units with and without hydronic module

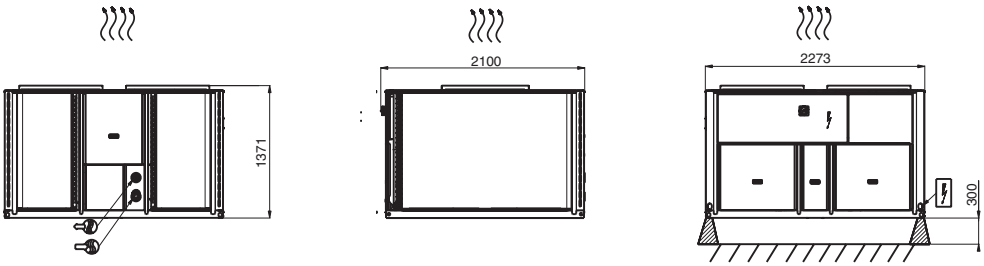

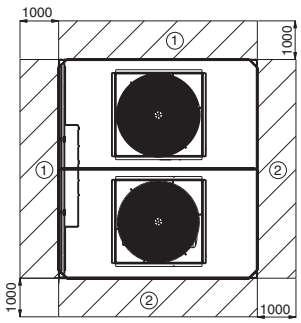

Notes:

A Non-certified drawings.
Refer to the certified dimensional drawings supplied with the unit or available on request, when designing an installation. For the location of fixing points, weight distribution and coordinates of the centre of gravity refer to the certified dimensional drawings.

B In multiple-unit installations (maximum four units), the side clearance between the units should be increased from 1000 to 2000 mm.

C The height of the solid surface must not exceed 2 m.

30RQV 017-021 NEW

Nominal cooling capacity 15-18 kW
Nominal heating capacity 17-21 kW

HEATING

greenspeed AQUASNAP

The AquaSnap Greenspeed liquid chiller/heat pump range was designed for commercial applications such as the air conditioning of offices, hotels and large residential houses.

The units integrate the latest technological innovations:
Non-ozone depleting refrigerant R410A, DC inverter twin-rotary compressors, low-noise variable speed fans and microprocessor control.

With exceptional energy efficiency values the inverter chillers qualify for local tax reductions and incentive plans in all EU countries.

For added flexibility the AquaSnap Greenspeed units are available with or without hydraulic module integrated into the unit chassis, limiting the installation to straightforward operations like connection of the power supply and the water supply and return piping.

Easy and fast installation

Hydronic module available

Inverter technology compressor and fans

Superior reliability

Physical data

30RQV				17	21
Cooling					
Standard unit	C1	Nominal capacity	kW	14,9	18,6
Full load performances*	C1	EER	kW/kW	3,0	3,1
	C1	Eurovent class cooling		B	A
	C2	Nominal capacity	kW	20,2	25,8
	C2	EER	kW/kW	3,8	3,8
	C2	Eurovent class cooling		A	A
Seasonal efficiency		ESEER	kW/kW	4,01	3,85
Heating					
Standard unit	H1	Nominal capacity	kW	17,1	21,1
Full load performances*	H1	COP	kW/kW	4,1	4,1
	H1	Eurovent class heating		A	A
	H2	Nominal capacity	kW	16,9	20,0
	H2	COP	kW/kW	3,3	3,3
	H2	Eurovent class heating		A	A
	H3	Nominal capacity	kW	15,2	21,1
	H3	COP	kW/kW	2,7	2,5
Seasonal efficiency**	H3	SCOP	kW/kW	3,1	2,9
	H3	ηs heat	%	121	113
	H3	Prated	kW	9,5	15,43
	H3	Annual Energy consumption	KWh	6269	10980
	H3	Energy class		A+	A+
Sound levels					
Standard unit					
Sound power level (2)			dB(A)	71	74
Sound pressure level at 10 m (3)			dB(A)	40	43
Dimensions - Standard unit					
Length (5)			mm	1109	1109
Width			mm	584	584
Height			mm	1579	1579
Operating Weight (1)					
Standard unit			kg	190,9	199,4
Compressors			Rotary compressor	1	1
Refrigerant			R410A		
Charge (1)			kg	8	8
Capacity control					
Minimum capacity (6)			%	33%	41%
Air heat exchanger			Grooved copper tubes, aluminium fins		
Fans - Standard unit			Axial type fan		
Quantity				2	2
Maximum total air flow			l/s	2000	2400
Maximum rotational speed			rps	14	16
Water heat exchanger			Brazed plate heat exchanger		
Water volume			l	1,52	1,9
Max water-side operating pressure without hydronic module			kPa	1000	1000
Hydronic module (option)			Pump, relief valve, paddle flow switch, expansion tank (option)		
Pump			Centrifugal pump (fixed speed or variable speed)		
Expansion tank volume			l	8	8
Max. water-side operating pressure with hydronic module (4)			kPa	300	300
Water connections (Without Hydronic Module)					
Inlet diameter (BSP GAS)			inch	1	1
Outlet diameter (BSP GAS)			inch	1	1
Water connections (With Hydronic Module)					
Inlet diameter (BSP GAS)			inch	1-1/4	1-1/4
Outlet diameter (BSP GAS)			inch	1	1
Water Filling System (Option 287)					
Diameter (BSP GAS)			inch	1/2	1/2
Chassis paint colour			Colour code:	RAL 7035	RAL 7035

* In accordance with standard EN 14511-3:2013
** In accordance with standard EN 14825:2013, Average climate
C1 Cooling mode conditions : evaporator water entering/leaving temperature 12°C/7°C, outside air temperature 35°C, evaporator fooling factor 0m² K/W
C2 Cooling mode conditions : evaporator water entering/leaving temperature 23°C/18°C, outside air temperature 35°C, evaporator fooling factor 0m² K/W
H1 Heating mode conditions : Water heat exchanger water entering/leaving temperature 30°C/35°C, fooling factor 0m² K/W. Outside air temperature 7°C db / 6°C wb
H2 Heating mode conditions : Water heat exchanger water entering/leaving temperature 40°C/45°C, fooling factor 0m² K/W. Outside air temperature 7°C db / 6°C wb
H3 Heating mode conditions : Water heat exchanger water entering/leaving temperature 47°C/55°C, fooling factor 0m² K/W. Outside air temperature 7°C db / 6°C wb
(1) Values are guidelines only. Refer to the unit nameplate.
(2) In dB ref=10-12 W, (A) weighting. Declared dualnumber noise emission values in accordance with ISO 4871 (with an associated uncertainty of +/-3dB(A)). Measured in accordance with ISO 9614-1 and certified by Eurovent.
(3) In dB ref 20 µPa, (A) weighting. Declared dualnumber noise emission values in accordance with ISO 4871 (with an associated uncertainty of +/-3dB(A)). For information, calculated from the sound power level Lw(A).
(4) Min. water-side operating pressure with fixed speed hydronic module is 50 kPa and with variable speed hydronic module is 40 kPa.
(5) Length = 1141 mm if main disconnect switch
(6) Cooling Eurovent condition

PRELIMINARY DATA

Type key

30R B V 021 C H E - B B - - -

Range

B - Cooling
Q - Heat pump

V - Variable speed

017 - nominal size 17 kW
021 - nominal size 21 kW

T - Power supply with neutral cable w/o disconnect switch
C - Power supply with neutral with disconnect switch

X - Without hydronic module
H - With hydronic module with expansion tank
F - With hydronic module with expansion tank and water filling system
R - With hydronic and without expansion tank*
Z - With hydronic, w/o expansion tank and with water filling system
M - With variable speed circulator with expansion tank
N - With variable speed circulator with expansion tank and water filling system
P - With variable speed circulator without expansion tank
Q - With variable speed circulator, w/o expansion tank and with water filling system

Revision status

- Standard
B - Local Interface WUI

B - CCN Jbus gateway as standard
C - CCN Bacnet gateway
D - CCN LONtalk gateway

- Standard

- Without coil protection
E - Epoxy coil protection (Gold-fin)

Accessories
- Remote User Interface (00PSG002521900A)
- DHW sensor (00PSG002501300A)
- Master /slave sensor (00PSG000596400A)
- Additional OAT sensor (00PSG002522000A)

Hydronic module

The hydronic module reduces the installation time. The unit is factory-equipped with the main hydronic components required for the installation: screen filter, water pump, expansion tank and relief valve.

The water heat exchanger and the hydronic module are protected against frost down to -20°C, using an electric resistance heater (standard) and pump cycling. However, the use of MPG (Mono Propylene Glycol) can effectively protect the installation even in case of power failure.

The hydronic module is integrated into the unit without increasing its dimensions and saves the space normally used for the water pump.

2 Hydronics modules are available in option :

- With fixed speed pump
- With Variable speed circulator

Physical and electrical data

These are the same as for the standard unit except:

30 RQV - units with hydronic module		017/021 Fixed Speed	017/021 Variable Speed
Hydronic module			
Expansion tank volume	l	8	8
Maximum water-side operating pressure	kPa	300	300
Pumps			
Water pump	Pump, screen filter, expansion tank, flow switch, relief valve		
Power input*	kW	0.82	0.31
Nominal operating current draw*	A	1.60	1.57

* Nominal conditions: evaporator entering/leaving water temperature 12°C/7°C, outside air temperature 35°C, evaporator fouling factor = 0 m² K/kW.
Gross performances, not in accordance with EN14511-3:2013. These performances do not take into account the correction for the proportional heating capacity and power input generated by the water pump to overcome the internal pressure drop in the heat exchanger.

Typical hydronic circuit diagram

With the hydronic module 17-21 kW

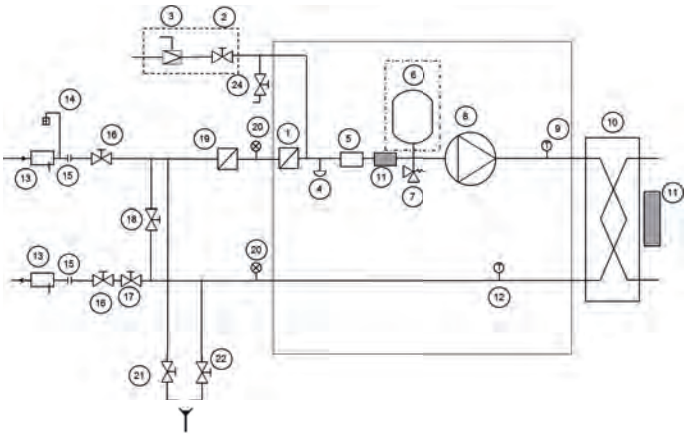

Without the hydronic module 17-21 kW

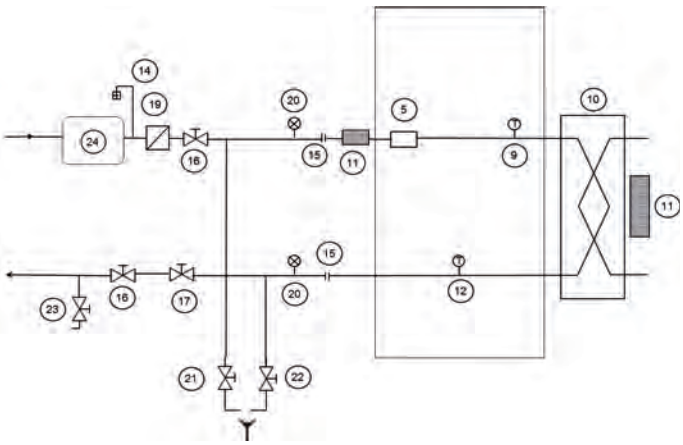

Components provided with unit
Water filling system (option)
Expansion tank (option)

Legend

Hydronic components
1. Mesh filter
2. On/off valve (water filling - optional)
3. Pressure reducer (water filling - optional)
4. Water drain valve
5. Paddle flow switch
6. Expansion tank
7. Safety valve
8. Pump
9. Temperature sensor
10. Brazed Plate Heat Exchanger
11. Anti-freeze electric heater
12. Temperature sensor

System components
13. Pocket for temperature sensor
14. Air purge
15. Flexible connections
16. On/off valve
17. Water flow control valve (factory supplied only with hydronic module option but to be installed on site)
18. Bypass valve for anti-freeze protection (when, in winter, on/off valve are closed)
19. Mesh filter (mandatory for a unit without hydronic kit)
20. Pressure gauge
21. Water drain valve from the plant
22. Water drain valve from refrigerant – water exchanger
23. Charge valve
24. Buffer tank (if required)

Features and advantages

Features

The AquaSnap Greenspeed systems can be used with a wide choice of Carrier terminal fan coil units - cassettes, low, medium and high-pressure satellite units, console units, underceiling units and high-wall units.

Ecodesign is the European Directive that sets mandatory requirements for Energy related Products (ErP) to improve their energy efficiency. Carrier supports initiatives to reduce the environmental impact of its products.

Quiet operation

- Compressors
  - Low-noise INVERTER Twin rotary compressor with low vibration levels
  - Advanced technology providing maximum energy-efficiency with high capacity available at peak conditions and optimised efficiency at low and mid compressor speeds. The AquaSnap Greenspeed heat pump DC inverter uses Intelligent Power Drive Unit (IPDU) hybrid inverter technology. An electronic management logic is used to optimised compressor operation in all conditions, minimised temperature fluctuation to give a perfect individual comfort control with significant reduction of energy comsuption :
    - PWM: pulse width modulation of the direct current controls the compressor at partial load conditions, adjusting the frequency at fixed voltage. The compressor speed is fine-tuned and the system provides high-level comfort (no temperature fluctuations) at exceptionally efficient working conditions.

Compressor frequency is increased continuously up to the maximum level. This ensures that there are no current draw peaks in the start-up phase. Inverter ramp-up speed makes soft starts unnecessary and ensures immediate maximum power.

  - The two rotary compression cylinders, offset from each other by 180°, and the DC brushless motor with the shaft in perfect balance ensure reduced vibration and noise, even at very low operating speeds. This results in an extremely wide range between minimum and maximum capacity with continuous operation, guaranteeing that the system is always optimised and provides maximum comfort at exceptionally high efficiency levels.
  - Twin-rotary cylinders, low vibrations and low load to the shaft ensure highest compressor reliability and a long trouble-free operating life.
  - All DC brushless twin-rotary compressors are equipped with internal system to secure the motor against oil issues due to colder climate.
  - A double compressor shield for acoustic insulation further reduces noise levels.
- Air heat exchanger section
  - Vertical air heat exchanger coils
  - The latest-generation low-noise fans are now even quieter and do not generate intrusive low-frequency noise
  - Rigid fan installation for reduced start-up noise.

Easy and fast installation

- Integrated hydronic module (option)
  - Fixed speed water pump or variable speed circulator
  - Water filter protecting the water pump against circulating debris
  - High-capacity membrane expansion tank ensures pressurisation of the water circuit (option)
  - Overpressure valve, set to 3 bar
  - Thermal insulation and frost protection down to -20°C, using an electric resistance heater and pump cycling.
  - Integrated water fill system to ensure correct water pressure (option)

No additional buffer tank required, simplyfing and speeding up the installation process (to be checked with the water volume of installation).

- Physical features
  - Advanced circuit design and component selection has resulted in a compact unit with an exceptionally small footprint that is easy to transport even through narrow doors.
    Reduced operating weight and a handle on the unit panels to facilitate transport.
  - The unit is enclosed by easily removable panels, covering all components (except air heat exchanger and fans).
  - A neutral color (RAL 7035) to facilitate the intregration in residential area
- Simplified electrical connections
  - Main disconnect switch with high trip capacity (option)
  - Transformer for safe 24 V control circuit supply included
- Fast commissioning
  - Systematic factory operation test before shipment
  - Quick-test function for step-by-step verification of the instruments, electrical components and motors.

Economical operation

- Increased seasonal efficiency
  - Increased saesonal efficiencyIn accordance with EN 14825:2013, Average Climate, energy label reach A+ (see Physical data RQV units). The exceptionally high energy efficiency of the AquaSnap Greenspeed unit is the result of a long qualification and optimisation process.
- Reduced maintenance costs
  - Maintenance-free twin rotary compressors
  - Fast diagnosis of possible incidents and their history via the user interface WUI
  - R410A refrigerant is easier to use than other refrigerant blends

Environmental care

- Non ozone depleting R410A refrigerant
  - Chlorine-free refrigerant of the HFC group with zero ozone depletion potential
  - Very efficient - gives an increased energy efficiency ratio (EER)
- Leak-tight refrigerant circuit
  - Brazed refrigerant connections for increased leaktightness
  - Verification of pressure transducers and temperature sensors without transferring refrigerant charge

Superior reliability

- State-of-the-art concept
  - Cooperation with specialist laboratories and use of limit simulation tools (finite element calculations) for the design of the critical components, e.g. motor supports, suction/discharge piping etc.
- Auto-adaptive control
  - Control algorithm prevents excessive compressor cycling and permits reduction of the water quantity in the hydronic circuit (Carrier patent)
- Exceptional endurance tests
  - Corrosion resistance tests in salt mist in the laboratory
  - Accelerated ageing test on components that are submitted to continuous operation: compressor piping, fan supports
  - Transport simulation test in the laboratory on a vibrating table.

Controls

NHC Control

NHC control associate with compressor and fan variable frequency driver combines intelligence with operating simplicity. The control constantly monitors all machine parameters and precisely manages the operation of compressor, expansion devices, fans and of the water heat exchanger water pump for optimum energy efficiency.

- Ease-of-use
  - NHC control can be associated with a new User interface (WUI) which allow an easy access to the configuration parameters (frequency compressor, refrigerant circuit temperature, sets points, air temp, entering water temp, alarm report…)

  - This user interface is also very intuitive in its use. It allows reading and easy selection of the operating mode. The functions are represented by icons on the LCD backlit screen.
  - To facilitate the use of this interface, 3 levels of access are available: end user, installer and factory.
- Key features
  - Heating and cooling mode
  - Domestic hot water
  - Master/slave control of 4 units operating in parallel with operating time equalisation and automatic changeover in case of a unit fault (need Master slave sensor in accessory).
  - Scheduling period
- Choice of control product
  - 3 options are available to drive the 30RQV 17-21:
    - Dry contact
    - User interface WUI
    - ModBus protocol

User Interface WUI

  - This interface can be installed up to 50 m away. It is connected to the NHC board with a 4 wires cable.
  - 2 installation possibilities:
    - Inside the room (with remote interface accessory) : IAT sensor is an accessory, it is not mandatory to operate in remote user interface, because WUI has an internal sensor to measure the room temperature take with the internal sensor, setpoint selected is air temperature.
    - On the HP/chiller (with local user interface option): setpoint is on water temperature are water temperature
- ModBus

Direct acces with Modbus connection to set, configure and monitor the 30RQV

- Input remote contact :
  - Remote On/Off Contact
  - Remote Heat/Cool Contact: This switch is used to select the Cooling Mode (contact opened) or the Heating Mode (contact closed).
  - Remote Economic Contact: This switch is used to select the regular Home Mode when contact is opened or the Economic Away Mode when contact is closed.

- Safety Input Contact: This switch is normally closed type, according to configuration it is used either to stop the unit, to ban the Heating Mode or to ban the Cooling Mode when contact is opened.

■ Large choice of Input Contacts

Several functions can be configured by the installer. They allow to adapt to the environment of the machine:

- Power Limitation / Night Mode : This switch is used to reduce the compressor maximum frequency to avoid noise.
- Off Peak: If the General Purpose Contact, configured to “Off Peak”, is closed then the Electric Heat Stages are not allowed.
- Loadshed Request : If the General Purpose Contact, configured to “Loadshed Request”, is closed then unit shall be stopped as soon as possible.
- Solar Input : If the General Purpose Contact, configured to “Solar Input”, is closed then the unit is not allowed to run in Heating or DHW Mode because hot water is produced from a solar source.
- DHW Request Switch from tank : When this input is closed, the Domestic Hot Water production is requested (need DHW sensor delivered in accessory).
- DHW Priority : When this input is closed, the unit is switching to Domestic Hot Water production regardless of the Space Heating demand and the current DHW schedule (need DHW sensor delivered in accessory).
- Anti-Legionella Cycle Request : When this input is closed, the Domestic Hot Water production is requested with the Anti-Legionella set point.
- Summer Switch : This switch is used to select the Winter (contact opened) or the Summer Mode (contact closed).
- Energy Meter Input : This input is used to count the number of pulses received from an external energy meter (not supplied)
- External Alarm Indication Input : When this input is opened, alarm is tripped. This alarm is for information only, it does not affect the unit operation.

■ Output remote contact available

2 Output contacts could be on the NHC board, upon configuration for the following purposes:

alert, alarm , Standby, running (Cool, Heat, DHW or Defrost Modes), IAT Reached, electrical Heat Stage 2, electrical Heat Stage 3

Operating limits

Cooling Cycle			
Evaporator Water Temperature	**°C**	**Minimum**	**Maximum**
Entering water temperature at start-up		6	30
Leaving water temperature during operation		5	18
Condenser Air Temperature	**°C**	**Minimum**	**Maximum**
Standard unit		0	46
Heating Cycle			
Condenser Water Temperature	**°C**	**Minimum**	**Maximum**
Entering water temperature at start-up		10	45
Leaving water temperature during operation		20	60/57*
Evaporator Air Temperature	**°C**	**Minimum**	**Maximum**
Standard unit		-20 **	30

* 60°C for 30RQV 17 and 57°C for 30RQV 21

** For operation at an outdoor ambient temperature below 0°C (cooling mode and heating mode), the water freeze protection should be available and / or the water loop can be protected against frost by the installer, using an anti-freeze solution.

30RQV (cooling mode)

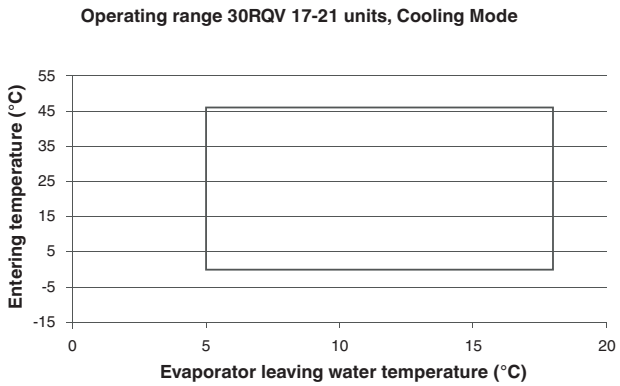

30RQV (heating mode)

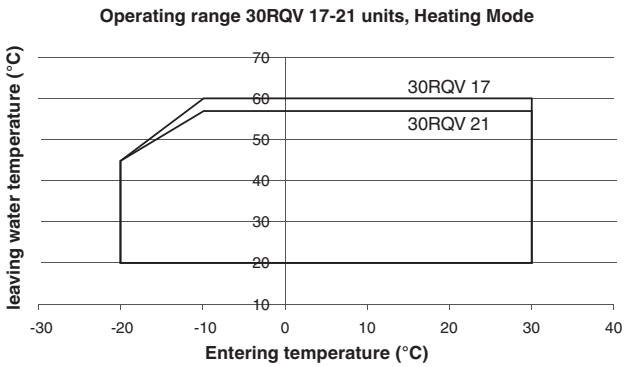

Available static system pressure

Available external static pressure for unit with fixed speed hydronic module 17 and 21kW

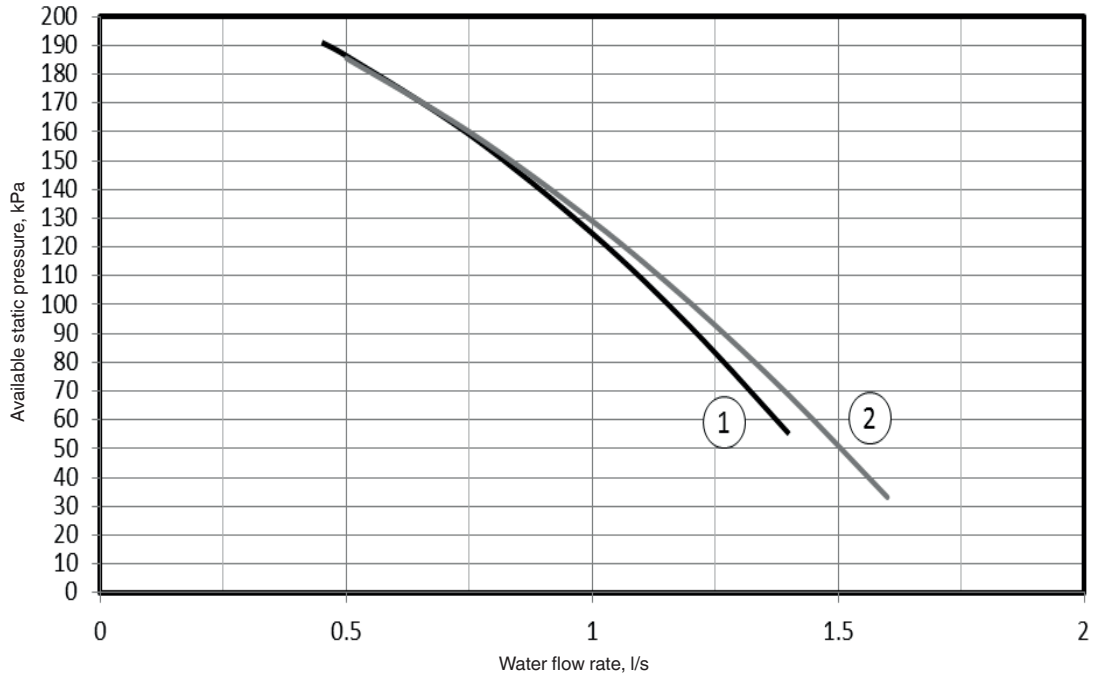

Legend
1. 30RQV 17
2. 30RQV 21

Available external static pressure for 17kW unit with variable speed hydronic module

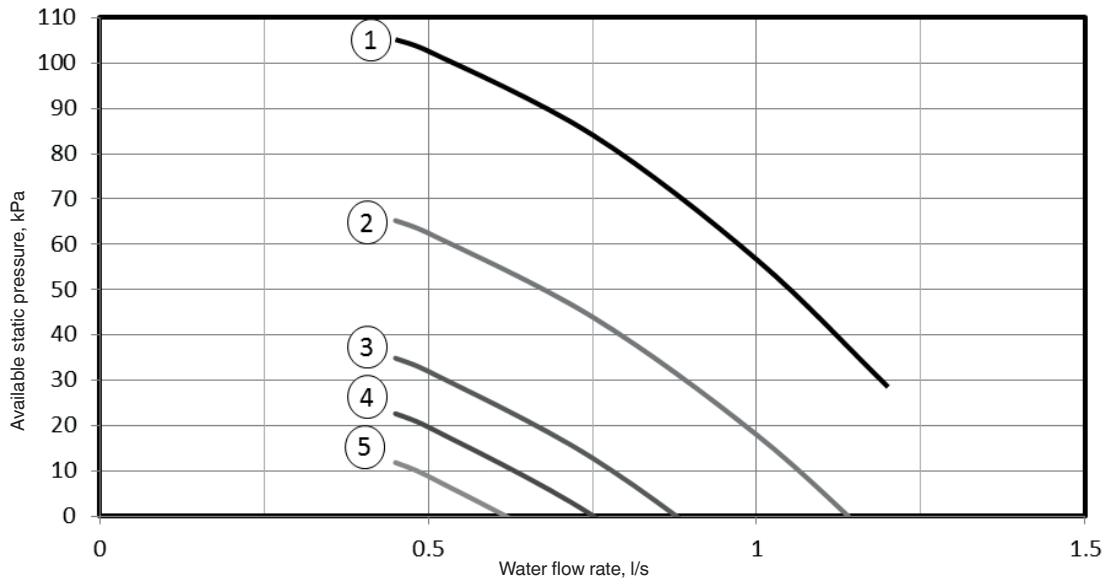

Legend
1. Pump Speed = 100%
2. Pump Speed = 75%
3. Pump Speed = 50%
4. Pump Speed = 38%
5. Pump Speed = 25%

Available static system pressure

Available external static pressure for 21kW unit with variable speed hydronic module

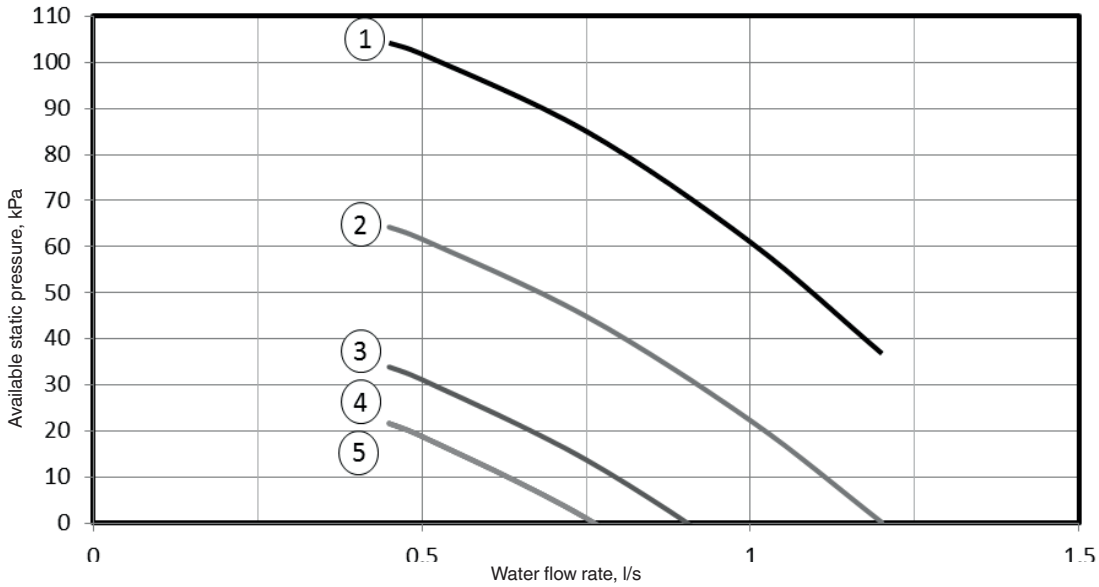

Legend
1. Pump Speed = 100%
2. Pump Speed = 75%
3. Pump Speed = 50%
4. Pump Speed = 38%
5. Pump Speed = 25%

HEATING

BPHE water flow rate

30RQV units without hydronic module		
	Minimum water flow rate, l/s	Maximum water flow rate, l/s
17	0,45	1,3
21	0,57	1,5

30RQV units with fixed speed hydronic module		
	Minimum water flow rate, l/s	Maximum water flow rate, l/s
17	0,45	1,4
21	0,57	1,6

30RQV units with variable speed hydronic module		
	Minimum water flow rate, l/s	Maximum water flow rate, l/s
17	0,45	1,2
21	0,57	1,2

Dimensions/clearances

30RQV 017-021

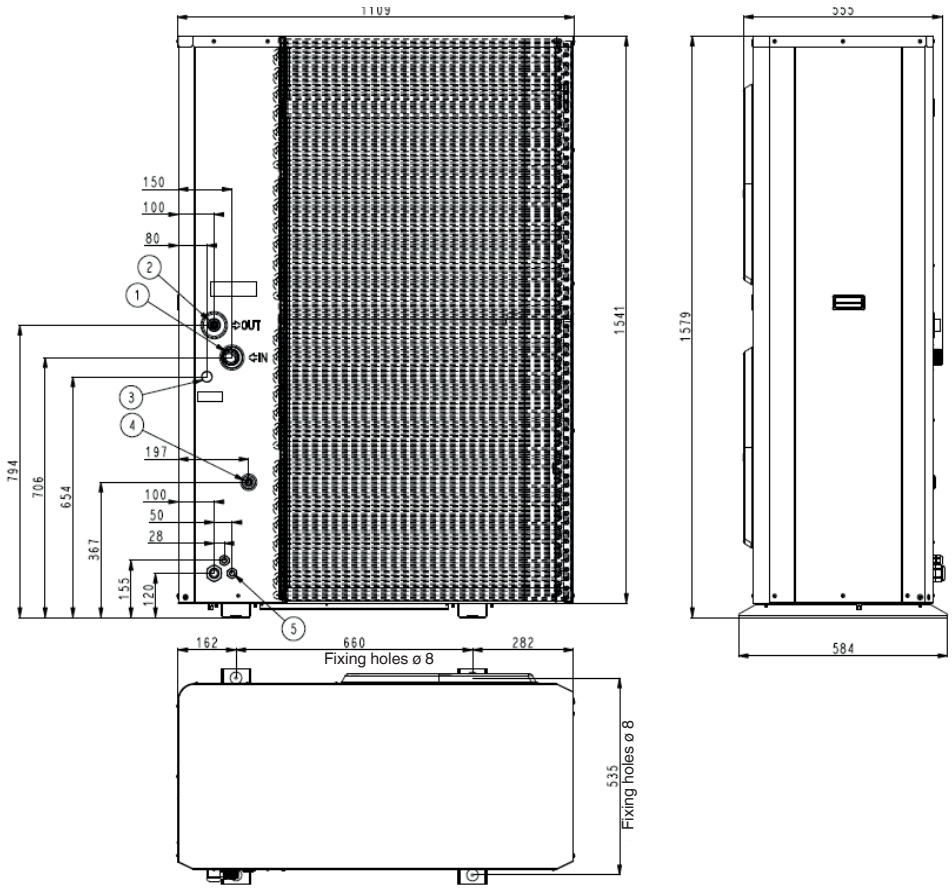

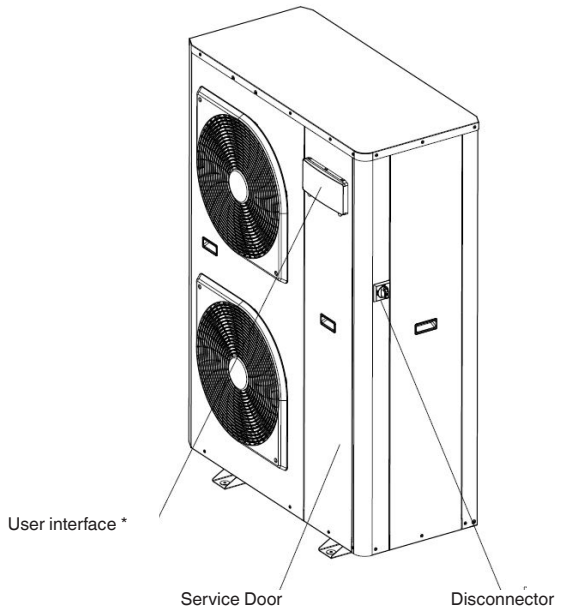

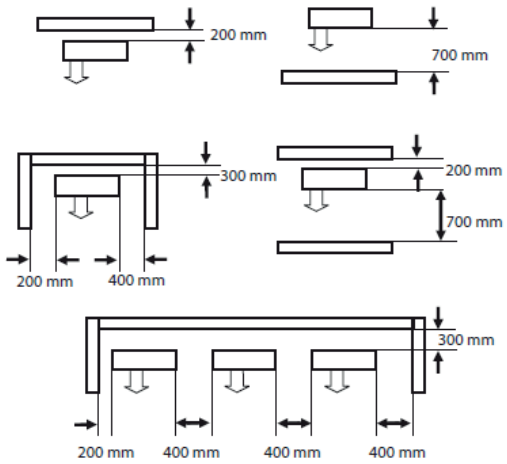

Legend

All dimensions are in mm

1. Water inlet
2. Water outlet
3. Fill kit connection
4. Safety valve outlet
5. Electrical connections

30RQ

Nominal heating capacity 16-40 kW
Nominal Cooling capacity 16-40 kW

AQUASNAP Reversible

HEATING

Easy and fast installation

Hydronic module available

Economical operation

Superior reliability

The AquaSnap heat pump range was designed for commercial applications such as the air conditioning of offices and hotels etc.

This AquaSnap units integrate the latest technological innovations:

- Non-ozone depleting refrigerant R410A
- Scroll compressors
- Low-noise fans
- Auto-adaptive microprocessor control

The AquaSnap units are equipped with a hydronic module integrated into the unit chassis, limiting the installation to straightforward operations like connection of the power supply and the water supply and return piping.

Physical data

30RQ				017	021	026	033	040
Cooling								
Full load performances*	C1	Nominal capacity	kW	16.0	20.2	26.7	32.7	39.8
	C1	EER	kW/kW	3.17	3.11	3.01	3.21	2.92
	C1	Eurovent Energy Class		A	A	B	A	B
	C2	Nominal capacity	kW	22.2	27.4	34.3	43.6	55
	C2	EER	kW/kW	4.02	3.76	3.62	3.96	3.5
Seasonal Efficiency*		ESEER	kW/kW	3.61	3.44	3.36	3.58	3.25
Heating								
Full load performances*	H1	Nominal capacity	kW	17.6	22.2	31.0	34.7	38.9
	H1	COP	kW/kW	3.99	3.98	3.98	3.98	3.51
	H1	Eurovent Energy Class		B	B	B	B	E
	H2	Nominal capacity	kW	17	21.6	29.9	33.3	41
	H2	COP	kW/kW	3.18	3.28	3.2	3.19	3.16
	H2	Eurovent Energy Class		B	A	A	B	B
Seasonal Efficiency**	H1	Energy Class		A	A	A	A	A
	H1	SCOP	kW/kW	3.03	3.05	3.11	3.13	3.14
		ηs heat	%	118	119	122	122	122
		Prated	KW	10	12	19	21	26
Sound Power Level Standard Unit			dB(A)	72	74	78	78	80
Operating weight†**								
Standard unit with/without hydronic module			kg	206/191	223/208	280/262	295/277	304/287
Refrigerant				R-410A				
Compressor				One hermetic scroll compressor				
Control				Pro-Dialog+				
Fans				Two twin-speed axial fans, 3 blades			One twin-speed axial fan, 7 blades	
Air flow			l/s	2217	1978	3530	3530	3530
Water heat exchanger				Plate heat exchanger				
Air heat exchanger				Copper tubes and aluminium fins				
Unit with hydronic module pump				One single-speed pump, screen filter, expansion tank, flow switch, pressure gauge, automatic air purge valve, safety valve				
Entering water connection			in	1-1/4	1-1/4	1-1/4	1-1/4	1-1/4
Leaving water connection			in	1	1	1-1/4	1-1/4	1-1/4
Nominal operating current			A	1.30	1.4	2.4	2.6	2.8
Dimensions								
Length			mm	1136	1136	1002	1002	1002
Depth			mm	584	584	824	824	824
Height			mm	1579	1579	1790	1790	1790

C1 Cooling mode conditions: Water heat exchanger, entering/leaving temperature 12°C/7°C, fouling factor 0 m² K/W. Outside air temperature 35°C
C2 Cooling mode conditions::Water heat exchanger, entering/leaving temperature 23°C/18°C, fouling factor 0 m² K/W. Outside air temperature 35°C
H1 Heating mode conditions: Water heat exchanger water entering/leaving temperature 30°C/35°C, fouling factor 0 m² K/W. Outside air temperature 7°C db/6°C wb,
H2 Heating mode conditions: Water heat exchanger water entering/leaving temperature 40°C/45°C, fouling factor 0 m² K/W. Outside air temperature 7°C db/6°C wb,
* In accordance with standard EN14511-3:2013
** In accordance with standard EN14825:2013, average climate
† Weight shown is a guideline only.

Eurovent certified data

Eurovent certified data

Electrical data

30RQ		017	021	026	033	040
Power circuit						
Nominal power supply	V-ph-Hz	400-3-50 ± 10%				
Control circuit supply		24 V via internal transformer				
Maximum start-up current (Un)*	A	75	95	118	118	176
Maximum operating power input**	kW	7.8	9.1	11	13.8	17.5
Nominal unit operating current draw***	A	8	12	16	17	25

* Maximum instantaneous start-up current (locked rotor current of the compressor).
** Power input, compressors and fans, at the unit operating limits (saturated suction temperature 10°C, saturated condensing temperature 65°C) and nominal voltage of 400 V (data given on the unit nameplate).
*** Standardised Eurovent conditions: water heat exchanger entering/leaving water temperature 12°C/7°C, outside air temperature 35°C.

Type key

30R Q - 0 2 1 C H E - B - - -

- 30R: Product Range
- Q: Q - Heat pump AquaSnap
- Q: Standard version
- 021: Nominal capacity
- C: C - Power supply with neutral cable (not available for size 40); D - Power supply without neutral cable
- H: 0 - Without hydronic module; H - With hydronic module with expansion tank; F - With hydronic module with expansion tank and water filling system; R - With hydronic module, without expansion tank; Z - With hydronic module, w/o exp. tank, with water filling system
- E: - - Without coil protection; E - Epoxy coil-protection (Gold-fin)
- -: Standard
- B: - - Without gateway; B - CCN Jbus gateway; C - CCN Bacnet gateway; D - CCN LONtalk gateway
- -: - - Standard; A - Remote User Interface HMI
- -: New option (not used)
- -: Revision status

Features and advantages

Quiet operation

- Compressors
  - Low-noise scroll compressors with low vibration levels
  - The compressor assembly is supported by anti-vibration mountings
- Air heat exchanger section
  - Vertical air heat exchanger coils
  - The latest-generation low-noise fans are now even quieter and do not generate intrusive low-frequency noise
  - Rigid fan installation for reduced start-up noise.

Easy and fast installation

- Integrated hydronic module
  - High-pressure centrifugal water pump
  - Water filter protecting the water pump against circulating debris
  - High-capacity membrane expansion tank ensures pressurisation of the water circuit
  - Overpressure valve, set to 4 bar
  - Pressure gauge to measure the system pressure.
  - Automatic purge valve positioned at the highest point of the hydronic module to remove air from the system.
  - Thermal insulation and frost protection down to -10°C, using an electric resistance heater and pump cycling.
  - Integrated water fill system to ensure correct water pressure (option)
- Physical features
  - With its small footprint the unit blends in with any architectural styles.
  - The unit is enclosed by easily removable panels, covering all components (except air heat exchanger and fans).
- Simplified electrical connections
  - A single power supply point (power supply without neutral available as an option and in standard for units size 40kW)
  - Main disconnect switch with high trip capacity
  - Transformer for safe 24 V control circuit supply included
- Fast commissioning
  - Systematic factory operation test before shipment
  - Quick-test function for step-by-step verification of the instruments, electrical components and motors.

Economical operation

- Increased energy efficiency at part load
  - Eurovent energy efficiency class A and B (in accordance with EN14511-3:2013) in cooling and heating mode. The exceptionally high energy efficiency of the AquaSnap unit is the result of a long qualification and optimisation process.
- Reduced maintenance costs
  - Maintenance-free scroll compressors
  - Fast diagnosis of possible incidents and their history via the Pro-Dialog+ control
  - R410A refrigerant is easier to use than other refrigerant blends

Environmentally balanced

- Non-ozone depleting R410A refrigerant
  - Chlorine-free refrigerant of the HFC group with zero ozone depletion potential
  - Very efficient - gives an increased energy efficiency ratio (EER)
- Leak-tight refrigerant circuit
  - Brazed refrigerant connections for increased leak-tightness
  - Verification of pressure transducers and temperature sensors without transferring refrigerant charge

Superior reliability

- State-of-the-art concept
  - Cooperation with specialist laboratories and use of limit simulation tools (finite element calculations) for the design of the critical components, e.g. motor supports, suction/discharge piping etc.
- Auto-adaptive control
  - Control algorithm prevents excessive compressor cycling and permits reduction of the water quantity in the hydronic circuit (Carrier patent)
- Exceptional endurance tests
  - Corrosion resistance tests in salt mist in the laboratory
  - Accelerated ageing test on components that are submitted to continuous operation: compressor piping, fan supports
  - Transport simulation test in the laboratory on a vibrating table.

Controls

Pro-Dialog+ control

Pro-Dialog+ combines intelligence with operating simplicity. The control constantly monitors all machine parameters and precisely manages the operation of compressors, expansion devices, fans and of the water heat exchanger water pump for optimum energy efficiency.

Pro-Dialog+ interface

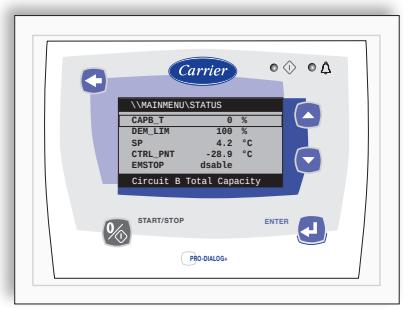

- Energy management
  - Seven-day internal time schedule clock: Permits unit on/off control and operation at a second set point
  - Set point reset based on the outside air temperature or the return water temperature or on the water heat exchanger delta T
  - Master/slave control of two units operating in parallel with operating time equalisation and automatic change-over in case of a unit fault.
  - Change-over based on the outside air temperature
- Integrated features
  - Night mode: Capacity and fan speed limitation for reduced noise level
- Ease-of-use
  - The new backlighted LCD interface includes a manual control potentiometer to ensure legibility under any lighting conditions.
  - The information is displayed clearly in English, French, German, Italian and Spanish (for other languages please consult Carrier)
  - The Pro-Dialog+ navigation uses intuitive tree-structure menus, similar to the Internet navigators. They are user-friendly and permit quick access to the principal operating parameters: number of compressors operating, suction/discharge pressure, compressor operating hours, set point, air temperature, entering/leaving water temperature.

Remote operating mode with volt-free contacts (standard)

A simple two-wire communication bus between the RS485 port of the AquaSnap and the Carrier Comfort Network offers multiple remote control, monitoring and diagnostic possibilities. Carrier offers a vast choice of control products, specially designed to control, manage and supervise the operation of an air conditioning system. Please consult your Carrier representative for more information on these products.

- Start/stop: Opening of this contact will shut down the unit
- Dual set point: Closing of this contact activates a second set point (example: Unoccupied mode)
- Alert indication: This volt-free contact indicates the presence of a minor fault
- Alarm indication: This volt-free contact indicates the presence of a major fault that has led to the shut-down of the unit
- User safety: This contact can be used for any customer safety loop, closing of the contact generates a specific alarm
- Out of service: This signal indicates that the unit is completely out of service
- Unit capacity: This analogue output (0-10 V) gives an immediate indication of the unit capacity
- Compressor operation: This contact signals that the compressor is in operation.

Operating limits

Water heat exchanger water flow rate

30RQ	Flow rate, l/s		
	Minimum	Maximum*	Maximum**
017	0.45	1.39	1.26
021	0.57	1.52	1.42
026	0.67	2.18	1.72
033	0.87	2.29	1.85
040	1.05	2.60	2.70

* Maximum flow rate at an available pressure of 50 kPa (unit with hydronic module)
** Maximum flow rate at pressure drop of 100 kPa in the plate heat exchanger (unit without hydronic module).

30RQ (cooling mode)

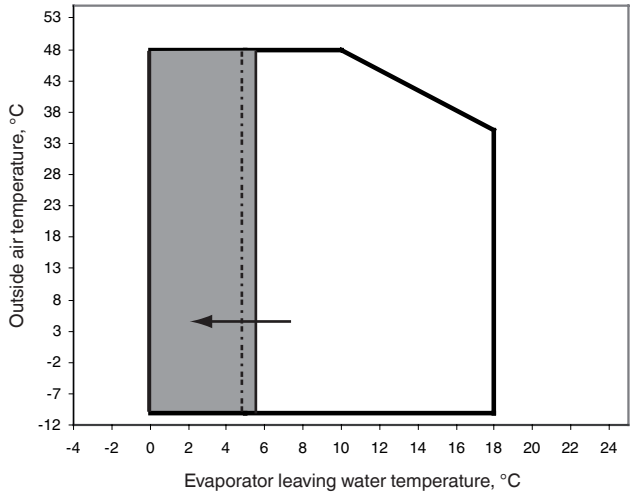

Operating range with anti-freeze solution and Pro-Dialog configuration.

30RQ (heating mode)

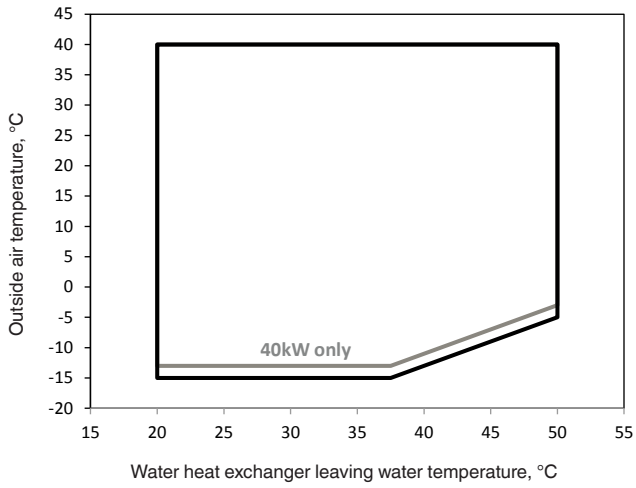

Available static system pressure

30RQ 017-040

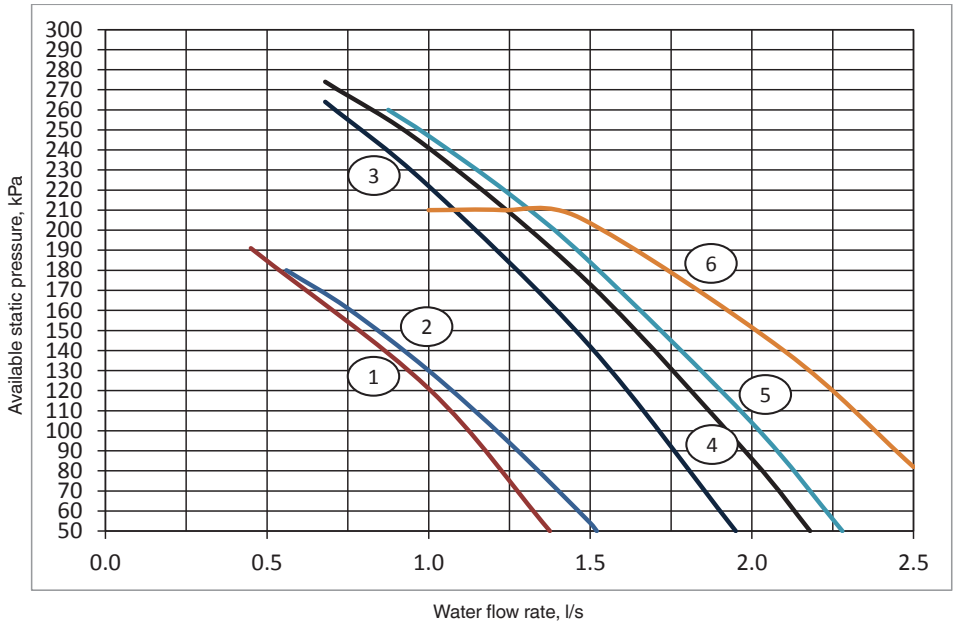

Legend
1. 30RQ 017
2. 30RQ 021
3. 30RB 026
4. 30RQ 026
5. 30RQ 033
6. 30RQ 040

Hydronic module

The hydronic module reduces the installation time. The unit is factory-equipped with the main hydronic components required for the installation: screen filter, water pump, expansion tank, safety valve and pressure gauge.

The water heat exchanger and the hydronic module are protected against frost down to -10°C, using an electric resistance heater (standard) and pump cycling.

The hydronic module is integrated into the unit without increasing its dimensions and saves the space normally used for the water pump.

Typical hydronic circuit diagram

17-21 kW

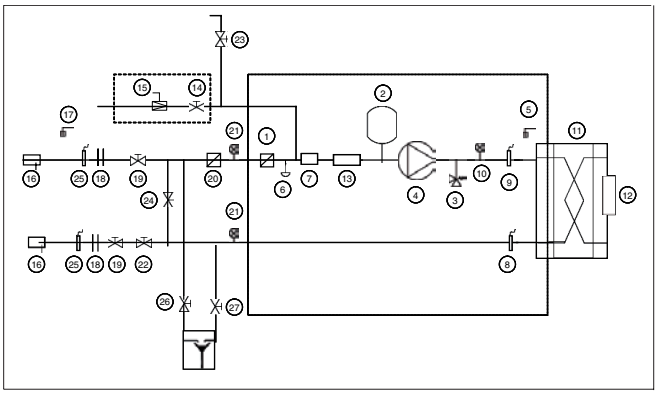

26-40 kW

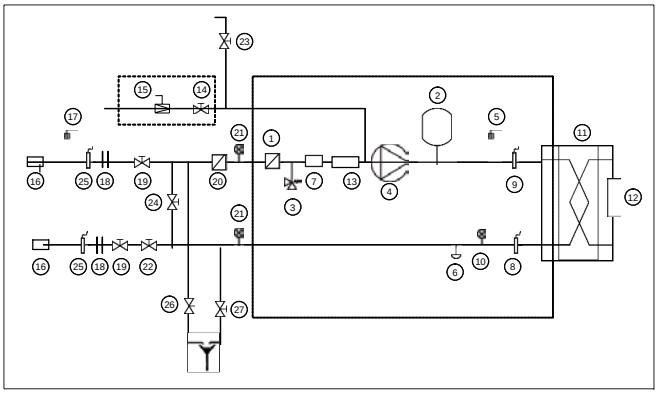

Hydronic module (unit with hydronic module)
Automatic water fill system option

Legend

Components of the unit and hydronic module

1. Screen filter
2. Expansion tank
3. Safety valve
4. High-pressure pump
5. Air purge
6. Water drain valve
7. Flow sensor
8. Plate heat exchanger leaving temperature sensor
9. Plate heat exchanger entering temperature sensor
10. Pressure gauge
11. Plate heat exchanger
12. Heat exchanger frost protection heater
13. Pipe frost protection heater
14. Shut-off valve (automatic water fill option)
15. Pressure reducer (automatic water fill option)

System components

16. Temperature sensor well
17. Air purge
18. Flexible connections
19. Shut-off valve
20. Screen fiter (obligatory for a unit without hydronic module)
21. Pressure gauge
22. Flow control valve (factory-supplied for field installation)
23. Charge valve
24. Frost protection bypass (when shut-off valves are closed in winter)
25. Pressure sensor
26. System drain valves
27. Plate heat exchanger drain valve

Dimensions/clearances

30RQ 017-021

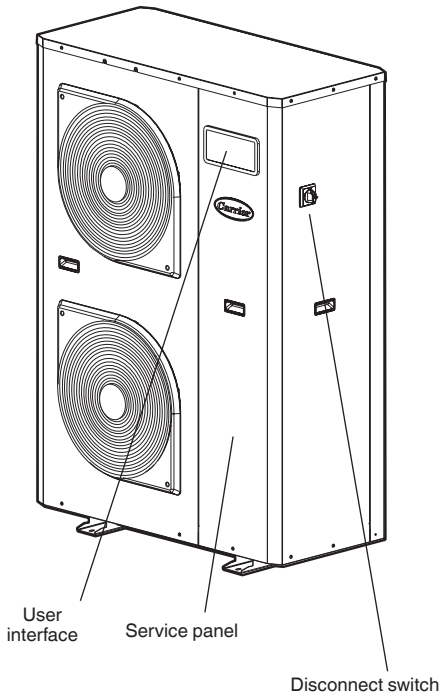

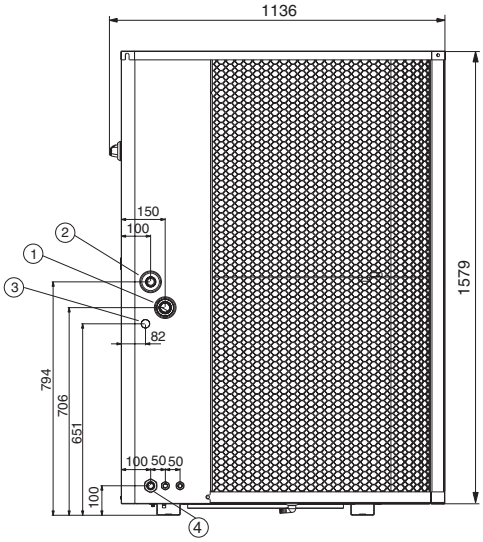

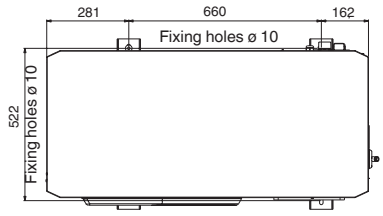

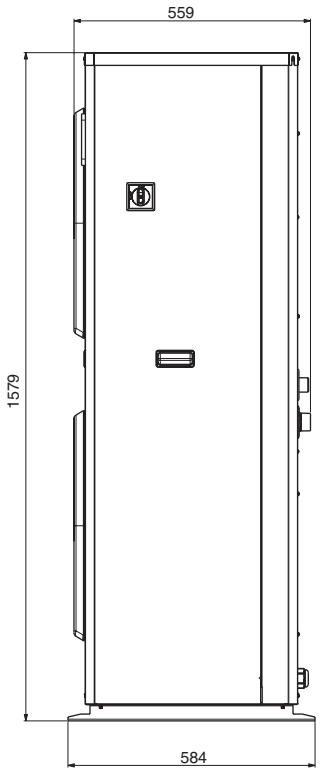

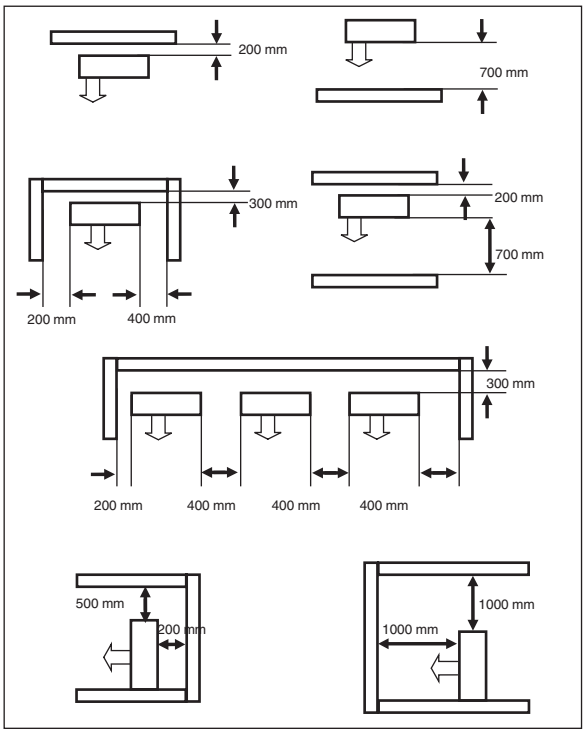

Legend

All dimensions are in mm

1. Water inlet
2. Water outlet
3. Water fill kit connection (option)
4. Power connections

30RQ 026-040

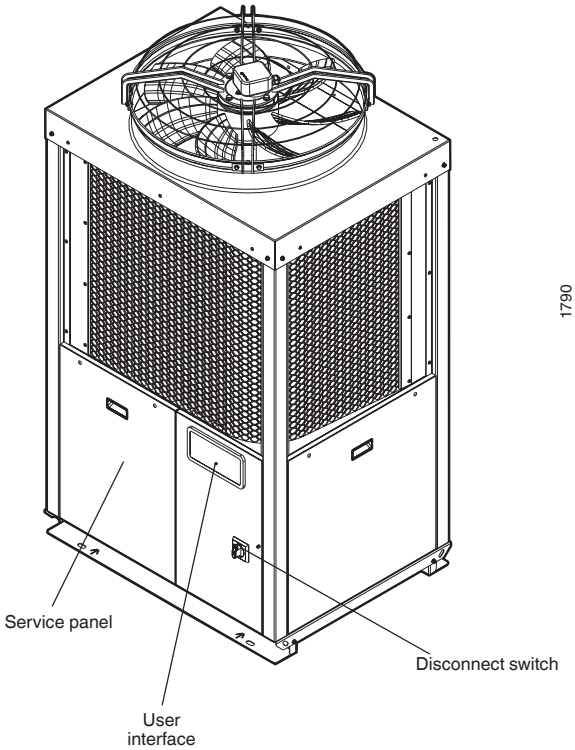

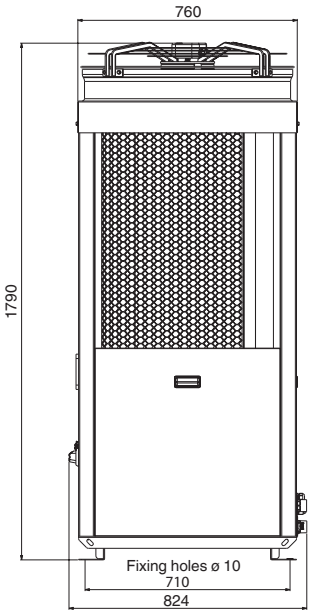

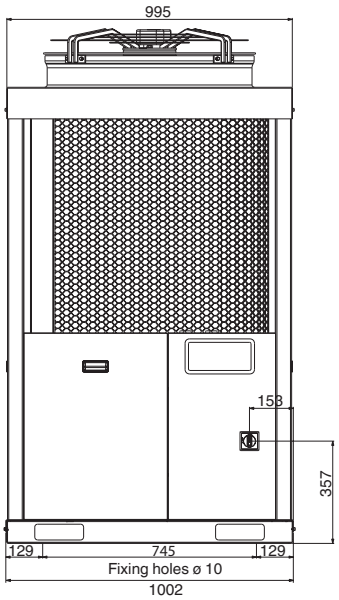

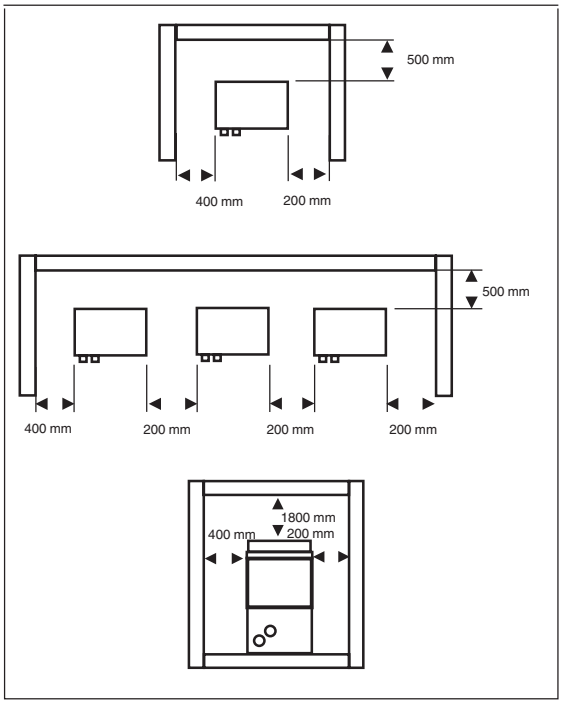

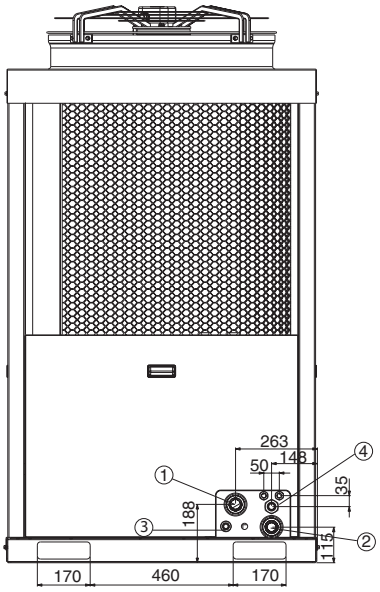

Legend
All dimensions are in mm
1. Water inlet
2. Water outlet
3. Water fill kit connection (option)
4. Power connections

30PH / PHC

Nominal cooling capacity 17-36 kW
Nominal heating capacity 21-43 kW

HEATING

AQUASNAP®

Packaged unit all in one

High efficiency

Silent operation

Configuration flexibility

Ductable feature for indoor installation

The 30PH reversible heat pumps are compact outdoor air/water units. Available in two versions: STD (Standard) and HEE (High Energy Efficiency).

These units have been made for operation indoors in the production of cold water, applicable to cooling and industry.

They are equipped with centrifugal fan (STD version) or electronic plug-fan (HEE version), plate exchanger, hermetic scroll compressor, and electronic control with microprocessor, components optimised for the R-410A refrigerant.

This range is also offered with an integrated circulation pump: 30 PHC.

The entire range also has the option to include a desuperheater circuit that allows for the production of hot water at a temperature greater than in the condensation circuits.

All units are charged with refrigerant and are tested at the factory, verifying the correct operation of all their components.

EUROVENT CERTIFIED PERFORMANCE
www.eurovent-certification.com

CARRIER participates in the ECP programme for HE.
Check ongoing validity of certificate :
www.eurovent-certification.com

STD version: Technical characteristics

30PH				90STD	100STD	120STD	160STD	180STD
Cooling								
Cooling capacities	Net cooling capacity *		kW	17,70	21,10	25,20	32,70	36,00
	Net power input ***		kW	7,75	9,15	10,00	12,60	14,40
	Net efficiency	**EER**		2,29	2,31	2,51	2,60	2,49
	Seasonal efficiency	**ESEER ******		2,61	2,59	2,81	2,94	2,85
Heating								
Heating capacities	Net heating capacity **		kW	21,80	26,10	29,70	38,30	42,60
	Net power input ***		kW	7,31	8,90	9,90	12,90	14,20
	Net efficiency	**COP**		2,97	2,94	3,00	2,97	3,01
	Seasonal efficiency ***** Average climate	**SCOP**		3,17	3,17	3,12	3,00	2,95
		ηs Heat		124%	124%	122%	117%	115%
		Prated		18,80	21,50	24,43	29,49	34,68
	Seasonal efficiency ***** Warmer climate	**SCOP**		3,59	3,63	3,57	3,42	3,35
		ηs Heat		140%	142%	140%	134%	131%
		Prated		12,73	14,70	16,72	24,30	27,32
Outdoor circuit centrifugal fan	Nominal air flow		(m^3/h)	6500	7000	10000	12200	12200
	Available static pressure		(mm.w.c)	20				
	Number / turbines			1				
	Motor output		kW	2,2	2,2	3,0	4,0	4,0
	Power input ******		kW	1,46	1,77	2,33	2,83	2,83
	Speed		(r.p.m.)	973	1027	837	734	734
Indoor circuit	Nominal water flow		(m^3/h)	3,1	3,7	4,3	5,7	6,2
	Pressure drop		(m.w.c)	2,3	3,2	2,9	4,7	2,9
	Minimum water flow		(m^3/h)	2,2	2,7	3,1	4,1	4,3
	Maximum water flow		(m^3/h)	6,2	7,4	8,8	11,3	12,7
	Type of hydraulic connections			Gas threaded				
	Diameter of connections			1 1/4" M		1 1/2" M		
Compressor	Type			Scroll				
	Number of compressors / stages / circuits			1 / 1 / 1				
	Oil type			Copeland 3MAF 32 cST, Danfoss POE 160 SZ, ICI Emkarate RL 32 CF, Mobil EAL Artic 22 CC				
	Volume of oil		l	3,0	3,3	3,3	3,3	6,2
Refrigerant	Type			R-410A				
	Global warming potential (GWP) *******			2.088				
	Charge		kg	5,9	6,1	6,6	6,9	7,6
	Environment impact		(tCO_2e)	12,3	12,7	13,8	14,4	15,9
Electrical characteristics	Electrical power supply			400 V / III ph / 50 Hz (±10%)				
	Power supply			3 Wires + Ground + Neutral				
Maximum absorbed current	Compressor		A	15,2	17,3	20,5	25,4	30,5
	Fan		A	5,0	5,0	6,9	8,9	8,9
	Control		A	0,9	0,9	0,9	0,9	0,9
	Total		A	21,1	23,2	28,3	35,2	40,3
Dimensions	Length		mm	1117		1398		
	Width		mm	860		860		
	Height		mm	1447		1727		
Weight	Empty		kg	302	310	372	390	388
	In operation		kg	306	315	379	397	396

* Cooling capacity calculated in accordance with the EN-14511-2013 standard given for outlet water temperature conditions of 7ºC and 35ºC outdoor temperature.
** Heating capacity calculated in accordance with the EN-14511-2013 standard given for outlet water temperature conditions of 45ºC and 6ºC WB outdoor temperature.
*** Total power input by compressor, motorised fan and electronic control under nominal conditions, calculated in accordance with the EN-14511-2013 standard. Options are not included.
**** European Seasonal Energy Efficiency Ratio (ESEER) obtained in accordance with the calculation conditions established by the certification body EUROVENT.
***** Values calculated in accordance with the EN-14825-2013 standard given for bivalente temperature of -5ºC in average climate and 2ºC in warmer climate.
****** Energy-efficient motors IE2.
******* Climatic warming potential of a kilogram of fluorinated greenhouse gas in relation to a kilogram of carbon dioxide over a period of 100 years.

HEE version: technical characteristics

30PH				90HEE	100HEE	120HEE	160HEE	180HEE
Cooling								
Cooling capacities	**Net cooling capacity ***		kW	18,40	21,00	25,50	31,40	35,70
	Net power input ***		kW	7,20	7,95	9,10	11,50	13,60
	Net efficiency	**EER**		2,55	2,64	2,81	2,74	2,62
	Seasonal efficiency	**ESEER ********		2,89	2,99	3,20	3,14	3,03
Heating								
Heating capacities	**Net heating capacity ****		kW	21,40	23,90	29,30	36,40	42,50
	Net power input ***		kW	7,10	7,90	9,50	11,90	13,90
	Net efficiency	**COP**		3,03	3,03	3,08	3,05	3,05
	Seasonal efficiency ******** Average climate**	**SCOP**		3,07	2,95	3,29	3,28	3,18
		ηs Heat		120%	115%	133%	128%	124%
		Prated		17,79	19,81	24,50	29,84	34,40
	Seasonal efficiency ******** Warmer climate**	**SCOP**		3,41	3,58	3,82	3,67	3,65
		ηs Heat		134%	140%	150%	144%	143%
		Prated		13,09	14,68	18,01	22,41	25,89
Outdoor circuit plug-fan	**Nominal air flow**		(m^3/h)	6500	7000	10000	12200	14000
	Nominal available static pressure		(mm.w.c)	20				
	Maximum available static pressure		(mm.w.c)	63,7	70,3	45,6	65,1	62,7
	Number / diameter			1 / 500		1 / 560	2 / 560	
	Motor output		kW	2,7	2,8	3,0	2 x 3,0	
	Power input ********		kW	1,33	1,21	1,87	2,20	2,52
	Speed		(r.p.m.)	1700	1780	1500	1500	
Indoor circuit	**Nominal water flow**		(m^3/h)	3,2	3,7	4,5	5,4	6,2
	Pressure drop		(m.w.c)	1,6	2,1	1,6	2,4	3,1
	Minimum water flow		(m^3/h)	2,5	2,9	3,4	4,1	4,6
	Maximum water flow		(m^3/h)	6,6	7,4	9,1	11,3	12,8
	Type of hydraulic connections			Rosca gas				
	Diameter of connections			1 1/4" M		1 1/2" M		
Compressor	**Type**			Scroll				
	Number of compressors / stages / circuits			1				
	Oil type			Copeland 3MAF 32 cST, Danfoss POE 160 SZ, ICI Emkarate RL 32 CF, Mobil EAL Artic 22 CC				
	Volume of oil		l	3,0	3,3	3,3	3,3	6,2
Refrigerant	**Type**			R-410A				
	Global warming potential (GWP) ********			2.088				
	Charge		kg	6,0	6,3	6,8	8,9	9,2
	Environment impact		(tCO_2e)	12,5	13,2	14,2	18,6	19,2
Electrical characteristics	**Electrical power supply**			400 V / III ph / 50 Hz (±10%)				
	Power supply			3 Hilos + Tierra + Neutro				
Maximum absorbed current	**Compressor**		A	15,2	17,3	20,5	25,4	30,5
	Fan		A	4,2	4,3	4,6	9,2	9,2
	Control		A	0,9	0,9	0,9	0,9	0,9
	Total		A	20,3	22,5	26,0	35,5	40,6
Dimensions	**Length**		mm	1117	1398		2113	
	Width		mm	860	860		860	
	Height		mm	1447	1727		1447	
Weight	**Empty**		kg	294	351	368	450	455
	In operation		kg	298	358	376	465	468

* Cooling capacity calculated in accordance with the EN-14511-2013 standard given for outlet water temperature conditions of 7ºC and 35ºC outdoor temperature.
** Heating capacity calculated in accordance with the EN-14511-2013 standard given for outlet water temperature conditions of 45ºC and 6ºC WB outdoor temperature.
*** Total power input by compressor, motorised fan and electronic control under nominal conditions, calculated in accordance with the EN-14511-2013 standard. Options are not included.
**** European Seasonal Energy Efficiency Ratio (ESEER) obtained in accordance with the calculation conditions established by the certification body EUROVENT.
***** Values calculated in accordance with the EN-14825-2013 standard given for bivalente temperature of -5ºC in average climate and 2ºC in warmer climate.
****** Energy-efficient motors IE2.
******* Climatic warming potential of a kilogram of fluorinated greenhouse gas in relation to a kilogram of carbon dioxide over a period of 100 years.

STD version: Technical characteristics with pump included 30PHC

30PHC				90STD	100STD	120STD	160STD	180STD
Cooling	**Seasonal efficiency**	**ESEER**		2,95	3,00	3,22	3,17	3,02
Heating	**Seasonal efficiency Average climate**	**SCOP**		3,19	3,96	3,43	2,29	3,17
		ηs Heat		125%	115%	134%	129%	124%
		Prated		17,84	19,81	24,56	29,80	34,27
	Seasonal efficiency Warmer climate	**SCOP**		3,64	3,56	3,77	3,67	3,60
		ηs Heat		143%	139%	148%	144%	141%
		Prated		13,12	14,69	18,05	22,40	25,83
Indoor circuit	**Nominal water flow**		m^3/h	3,2	3,7	4,5	5,4	6,2
	Pressure drop		(m.w.c.)	2,3	3,1	2,5	3,5	4,6
Expansion vessel	**Volume**		l	12				
	Filled pressure		kg/cm^2	1,5				
Dimensions	**Length**		mm	1117	1398		2113	
	Width		mm	860	860		860	
	Height		mm	1447	1727		1447	
Weight	**Empty**		kg	310	370	386	469	476
	In operation		kg	327	390	408	497	503

HEE version: technical characteristics with pump included 30PHC

30PHC				90HEE	100HEE	120HEE	160HEE	180HEE
Cooling	**Seasonal efficiency**	**ESEER**		2,95	3	3,22	3,17	3,02
Heating	**Seasonal efficiency Average climate**	**SCOP**		3,19	2,96	3,43	3,29	3,17
		ηs Heat		125%	115%	134%	129%	124%
		Prated		17,84	19,81	24,56	29,80	34,27
	Seasonal efficiency Warmer climate	**SCOP**		3,64	3,56	3,77	3,67	3,6
		ηs Heat		143%	139%	148%	144%	141%
		Prated		13,12	14,69	18,05	22,4	25,83
Indoor circuit	**Nominal water flow**		m^3/h	3,2	3,7	4,5	5,4	6,2
	Pressure drop		(m.w.c.)	2,3	3,1	2,5	3,5	4,6
Expansion vessel	**Volume**		l	12				
	Filled pressure		kg/cm^2	1,5				
Dimensions	**Length**		mm	1117	1398		2113	
	Width		mm	860	860		860	
	Height		mm	1447	1727		1447	
Weight	**Empty**		kg	310	370	386	469	476
	In operation		kg	327	390	408	497	503

Options

■ Pumps

The pump installed in a unit 30PHC can be replaced for:

- High-pressure, monocellular, IP55, circulation pump that can operate with glycol water (mono-ethylene glycol).
- Low-pressure, monocellular, IP55, circulation pump that can operate with glycol water (mono-ethylene glycol) (except model 90).

■ Configuration

- Vertical air supply, M01 assembly (default horizontal supply, M00 assembly).
- In the STD version: Different configurations of available pressure from 7 to 35 mm.w.c.

■ Climatic conditions

- In units with the **STD version** that work in cooling with an outdoor temperature lower than 12ºC, the condensation pressure control allowing an "all seasons" operation (up to -15ºC) is mandatory. This is performed per motorized damper in the fan outlet.

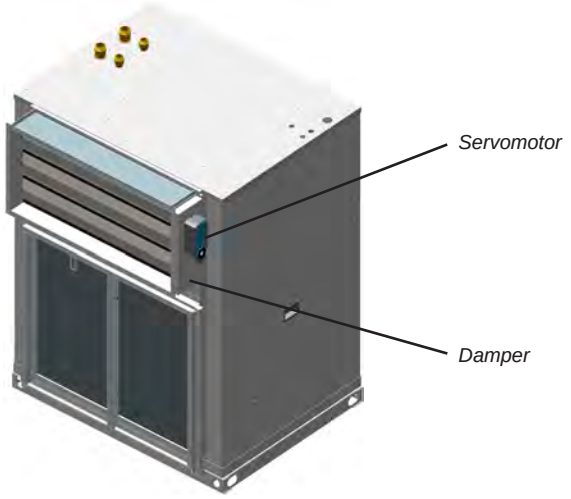

- Coils protection:
  - Coil with copper pipes and copper fins (upon request).
  - Coil with copper pipes and aluminium fins with polyurethane and blygold coating.
- During periods with low outdoor temperatures, anti-freeze protection for the unit:
  - Electrical heaters in the condensate drain pan. Mandatory when outdoor temperatures are below 3°C.
  - Operation with glycol water up to a minimum outlet temperature of -10ºC. Thermal insulation of the body 18 mm thick. Mandatory with negative conditions.
  - Anti-freeze protection with flexible electrical heaters around the pipe of the hydraulic circuit.

■ Installation

- Antivibration mounts made of rubber.
- Protection grille for the coil.
- Gravimetric filters in the return air. The filters frame is removable, and upon request, it is possible to supply the frame independently with the unit, to be joined on site.
- Flexible ducts for supply and return air.
- Flexible hydraulic connections (500mm), supplied in the kit.

Available for:

- Inlet / outlet of the unit.
- Inlet / outlet of the desuperheater circuit.

- For 30PH units, filter with stainless steel mesh (500 microns), supplied in the kit.

Note: this filter is standard for 30PHC units.

- Cut-off and water control valves, supplied in the kit.
- High-pressure and low-pressure gauges in the cooling circuit.

■ Energy recovery

Desuperheater circuit which includes:

- Thermally isolated, welded stainless steel plate exchanger for working in a closed circuit in the recovery of hot gases.
- Draining valve and ball valve
- Hot water recovery control thermostat.
- Option for a 3-speed hot water circulation pump.

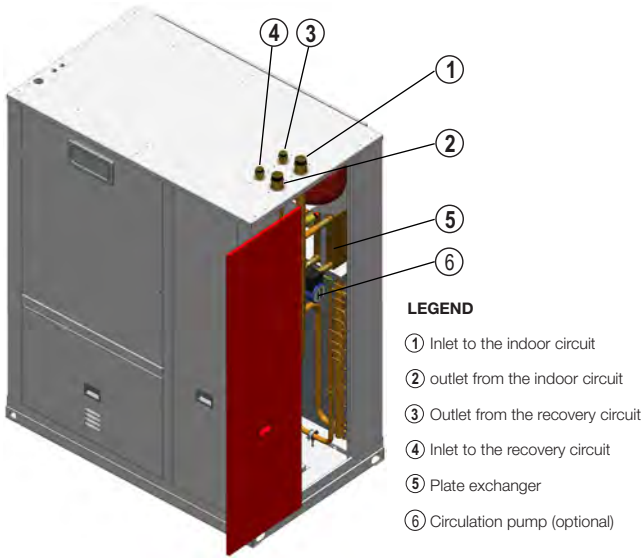

■ Electric panel

- Compressor soft starter.
- Transformer for power supply without neutral.
- Voltage 400 / 440V - 60 Hz (upon request).
- Energy meter for monitoring of the power consumption of the installation.

■ Control / communications management

- TCO user terminal, for remote control.
- RS485 serial cards for network communication with protocols: Carel, Modbus, LonWorks®, BACnetTM MSTP, Konnex.
- Ethernet pCO Web card for network communication with protocols: Modbus TCP/IP, BACnetTM Ethernet, TCP/IP, SNMP V1-2-3, FTP and HTTP.

Schematic diagram of the hydraulic circuit

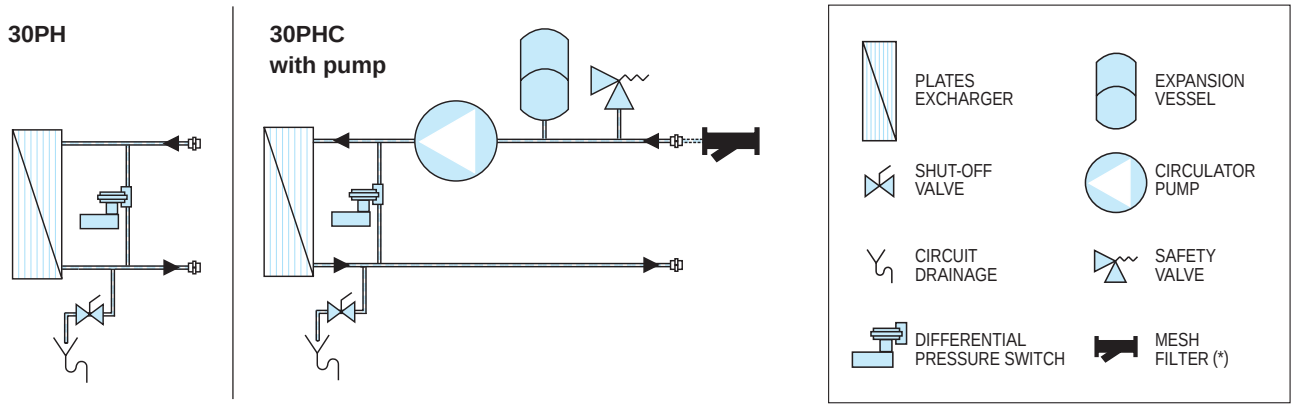

(*) Mesh filter, suplied in kit for installation by the client in 30PHC (optional for 30PH).
Cut-off and water regulation valves, as well as flexible hydraulic connections, can also be supplied in the kit.

Circulation pumps available for 30PHC

30PHC		90STD	90HEE	100STD	100HEE	120STD	120HEE	160STD	160HEE	180STD	180HEE
Number of pump	Standard	3.171	3.171	3.172	3.172	3.172	3.172	3.173	3.173	3.174	3.174
	High-pressure (optional)	3.173	3.173	3.173	3.173	3.174	3.174	3.174	3.174	3.175	3.175
	Low-pressure (optional)	--	--	3.171	3.171	3.171	3.171	3.171	--	3.229	3.229

Note: These pumps can operate with glycol water (mono-ethylene glycol), although with a reduction of the available pressure (due to the flow variation with glycol water). Consult the correction coefficients in the chapter "Operation with glycol water".

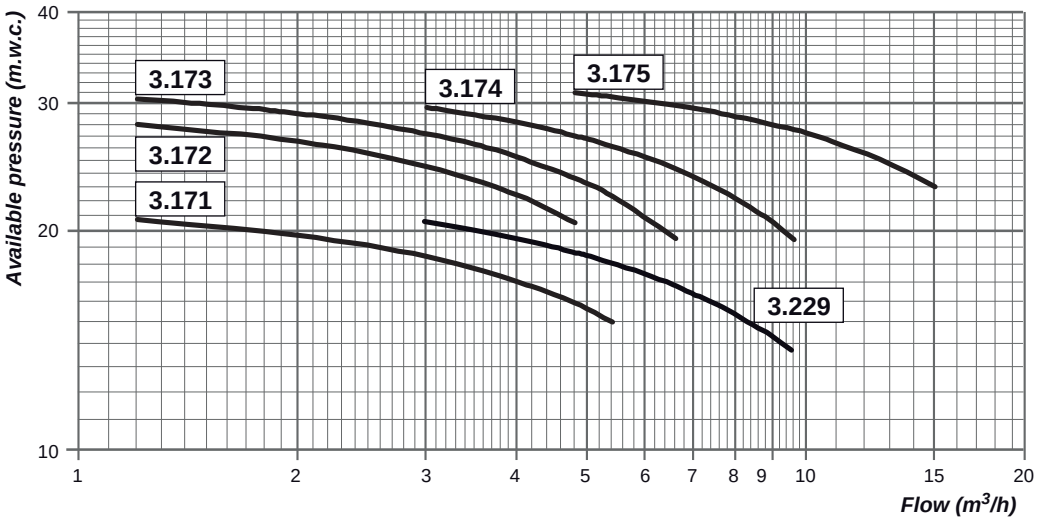

Number of pump		3.171	3.172	3.173	3.174	3.175	3.229
Motor output	kW	0,37	0,55	0,75	0,9	1,5	0,55
Maximum absorbed current	A	1,4	2,0	2,3	2,7	4,0	2,0
Minimum water flow	m³/h	1,2	1,2	1,2	3,0	4,8	3,0
Maximum pressure	(m.w.c)	20,7	28,0	30,3	29,5	31,6	20,6
Maximum water flow	m³/h	5,4	4,8	6,6	9,6	15,0	9,6
Minimum pressure	(m.w.c)	15,0	20,5	19,5	19,5	23,0	13,7

Unit components

- Casing
  - Casing made of galvanised steel metal with polyester paint, colour RAL 7035. Self-supporting and isolated frame.
- Outdoor circuit
  - Coil with copper pipes and aluminium fins.
  - Condensate drain pan.
  - Choice of air supply position:
    - HORIZONTAL: M00 assembly or VERTICAL: M01 assembly.

M00

M01

  - Supply fan:

    STD Version (Standard):
    - Centrifugal fan coupling by pulleys and belts.
    - Electric motor with tensioner, energy-efficient IE2 motors, class F, IP55, and internal thermal protection.
    - One double-intake turbine, with an impeller with front-curved blades. Greased spherical bearings, with no maintenance required.
    - Choice of available pressure from 7 to 35 mm.w.c.

    HEE Version (High Energy Efficiency):
    - Variable speed electronic plug-fan(s) with condensation pressure control which adapt their rotation speed to the installation requirements, thereby reducing electricity consumption, the sound level at partial charge, and improving the average seasonal output of the unit (ESEER).
    - Energy-efficient ErP 2015 motor, Class F, IP54, and internal thermal protection.
- Cooling circuit
  - Hermetic scroll-type compressor, with acoustic insulating cover, assembled over antivibration mounts. Control of phase equilibrium and the direction of rotation.
  - Crankcase heater.
  - Thermostatic expansion valve with external equalisation.
  - Anti-acid dehydrating filter, and liquid sight glass.
  - Liquid receiver (heat pump units).
  - Four-way cycle reversing valves (heat pump units).
- Indoor circuit
  - Thermally isolated, welded stainless steel plate exchanger.
- Version with circulation pump included (30PHC)

This version includes, in the same casing that the 30PH version, the following components:
  - Monocellular IP55 centrifugal circulation pump that can operate with glycol water (mono-ethylene glycol). The pump must be changed for mono-propylene glycol (upon request).
  - Closed expansion vessel.
  - Safety valve with a tare value of 4 bar and draining valve.
  - Air bleeder valve (model 160HEE and 180HEE).
  - Filter with stainless steel mesh (500 microns), supplied in the kit for installation by the installer.

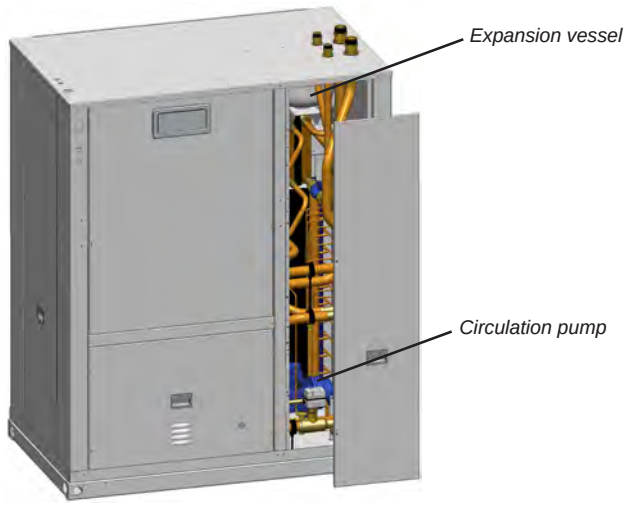

- Protections
  - High and low pressure pressostats.
  - Differential pressure switch for control of water flow.
  - Water anti-freeze protection built into the control, depending on the temperature measured by the probe placed on the exchanger outlet.
  - Refrigerant anti-freeze protection.
  - Compressor discharge temperature control.
  - Non-return valve built into the compressor discharge.
  - Compressor thermal protection.
  - Main door switch.
  - Automatic switch in the control circuit.
  - Magnetothermic protection switches for the compressor and fan motor power line.
  - Timing the disconnection of the circulation pump.
  - Failure safety device for the circulation pump.
- Electric panel
  - Complete and fully wired electric panel. Insulated panel cover to prevent condensation.
  - IP55 protection.
  - Power supply with neutral and main ground connection.
  - Compressor and fan motor contacts.

Controls

The 30PH control I is basically comprised of a µPC SMALL control board, a pGD1 graphic terminal, a TCO user terminal (optional for remote control) and sensors.

This control allows the connection to a centralised technical management system by using a specific BMS card for some of the following communication protocols: Carel, Modbus, LonWorks®, BACnet™ MSTP, Konnex, Modbus TCP/IP, BACnet™ Ethernet, TCP/IP, SNMP V1-2-3, FTP and HTTP.

- Main functions:
  - Control in HEATING mode.
  - Selection of inlet water temperature setpoints for HEATING mode.
  - Permanent control and optimization of the operating parameters
  - Safety management.
  - Timing of the compressor.
  - Control of condensation and evaporation pressures.
  - Control of outdoor electronic plug-fan (HEE version).
  - Control of the circulation pump.
  - Regulation of the water outlet temperature.
  - Compensation of the setpoint based on the outdoor temperature.
  - Timer and weekly programming.
  - Failure diagnosis and main alarm.

- pGD1 terminal

This graphic terminal, installed on the electric panel of the machine, allows:

- The initial programming of the unit
- Modification of operating parameters.
- Unit ON / OFF.
- Selection of the operating mode.
- Setting of setpoints.
- On-screen display of controlled variables and sensor values measured.
- On-screen display of active alarms and historical record of alarms.

- TCO user terminal (optional for remote control):

The TCO user terminal, for remote control, allows:

- Modification of some operating parameters.
- Unit ON / OFF.
- Selection of the operating mode and setting of setpoints.
- On-screen display some controlled variables and probe values.
- On-screen display of alarms codes.

Operation limits

Series	Cooling mode				Heating mode			
	Air		Water (outlet T.)		Air		Water (outlet T.)	
	Max.	**Min.**	**Max.**	**Min.**	**Max.**	**Min.**	**Max.**	**Min.**
30PH/PHC	46ºC	12ºC *	18ºC	5ºC **	20ºC DB	-15ºC DB	55ºC	30ºC

* With control of the condensation pressure operating up to -15ºC.
** Minimum outlet temperature. With the option of glycol water for lower temperature operation from 5ºC to -10ºC.

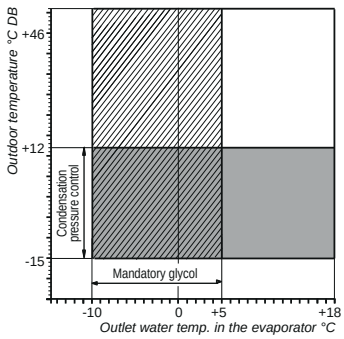

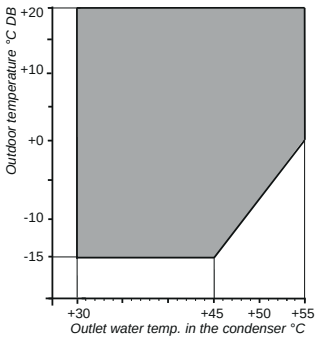

Minimum volume of water admissible in the installation (cooling mode)

The electronic control for the 30PH units incorporates an auto-adaptive control for the compressor operating time based on the time set for anti-short-cycle.

This control reduces the number of times the compressor is started up and permanently adjusts the system's thermal inertia, favouring the reduction of the minimum volume of water in the installation.

The size of the buffer tank can also be decreased since the unit will be stopped for less time.

30PHC		STD version					HEE version				
		90STD	100STD	120STD	160STD	180STD	90HEE	100HEE	120HEE	160HEE	180HEE
Minimum volume	l	101	120	143	187	204	107	132	152	189	210

The calculation of the minimum water volume has been done for nominal EUROVENT conditions, only in cooling mode. This value is applicable for the majority of refrigeration applications (group with fan-coil units).

Note: the buffer tan k is indispensable in installations that operate with a reduced volume of water (group with an air handling unit) or for industrial processes.
For applications with a heat pump, it is recommended that the buffer tank be used in order to maintain a stable temperature during the defrosting cycles.

Sound pressure level

Measurement conditions: in a clear field, measured at a distance of 10 metres, directivity 2 and at 1,5 metres from the ground.

30PH/PHC		STD version					HEE version				
		90STD	100STD	120STD	160STD	180STD	90HEE	100HEE	120HEE	160HEE	180HEE
Total	**dB(A)**	38,0	38,4	38,4	38,4	38,4	36,6	38,3	38,4	38,4	38,4

Note: The sound pressure level depends on the installation conditions and, as such, is only indicated as a guide. Values obtained according to standard ISO 3744.

Graphs of pressure drops in STD version

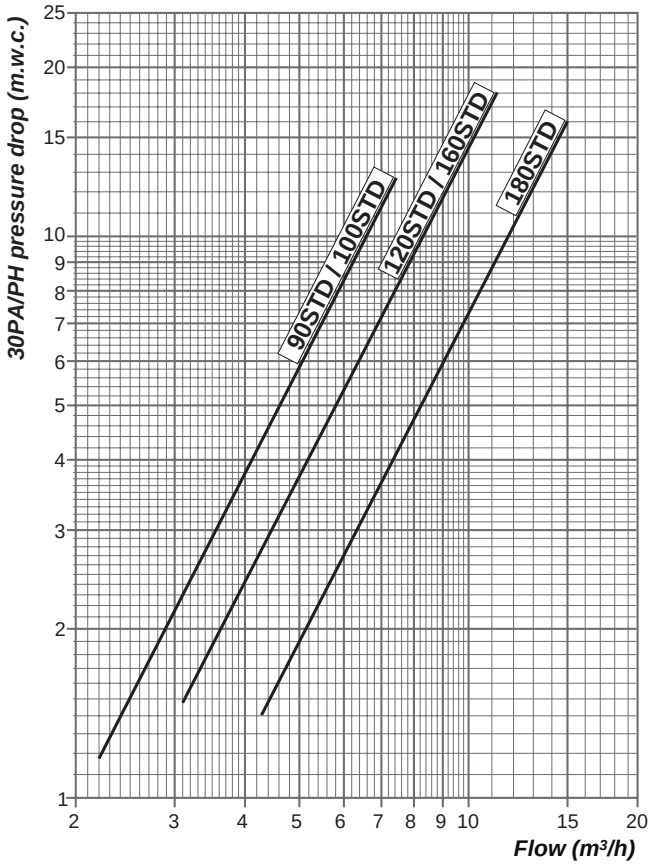

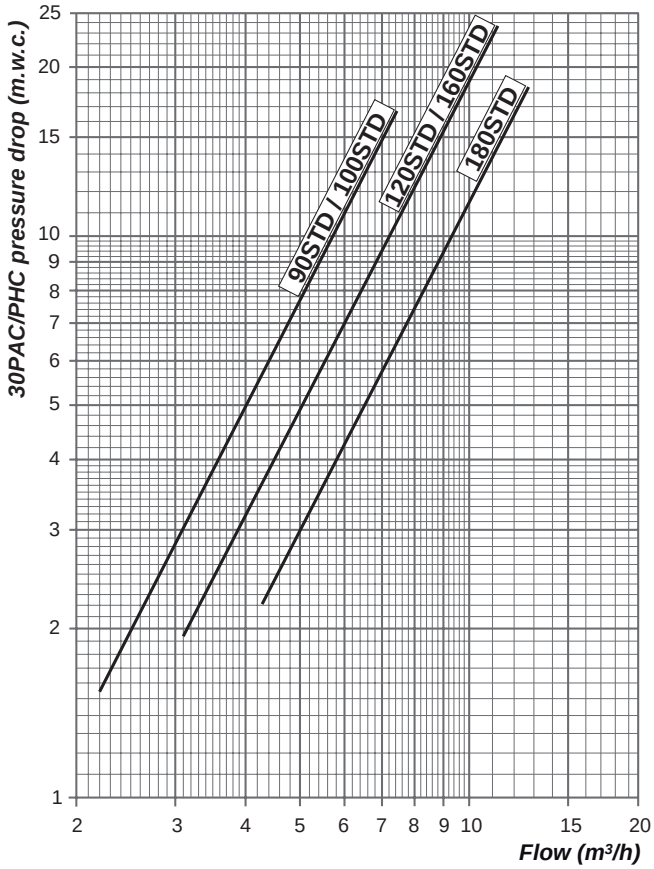

Graphs of pressure drops in HEE version

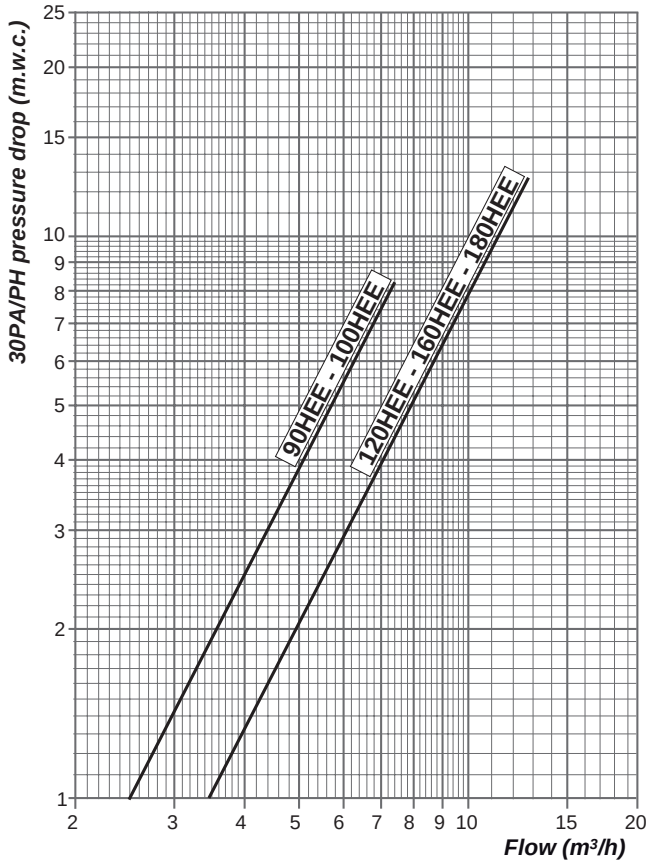

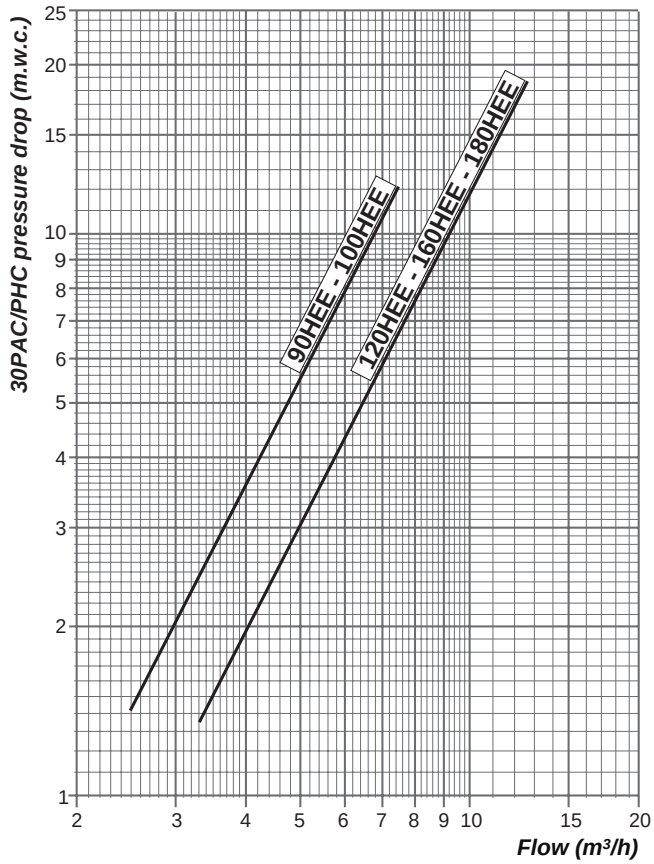

Dimension schemes for the STD version

30PH/PHC - 90STD / 100STD with HORIZONTAL supply, M00 assembly (mm)

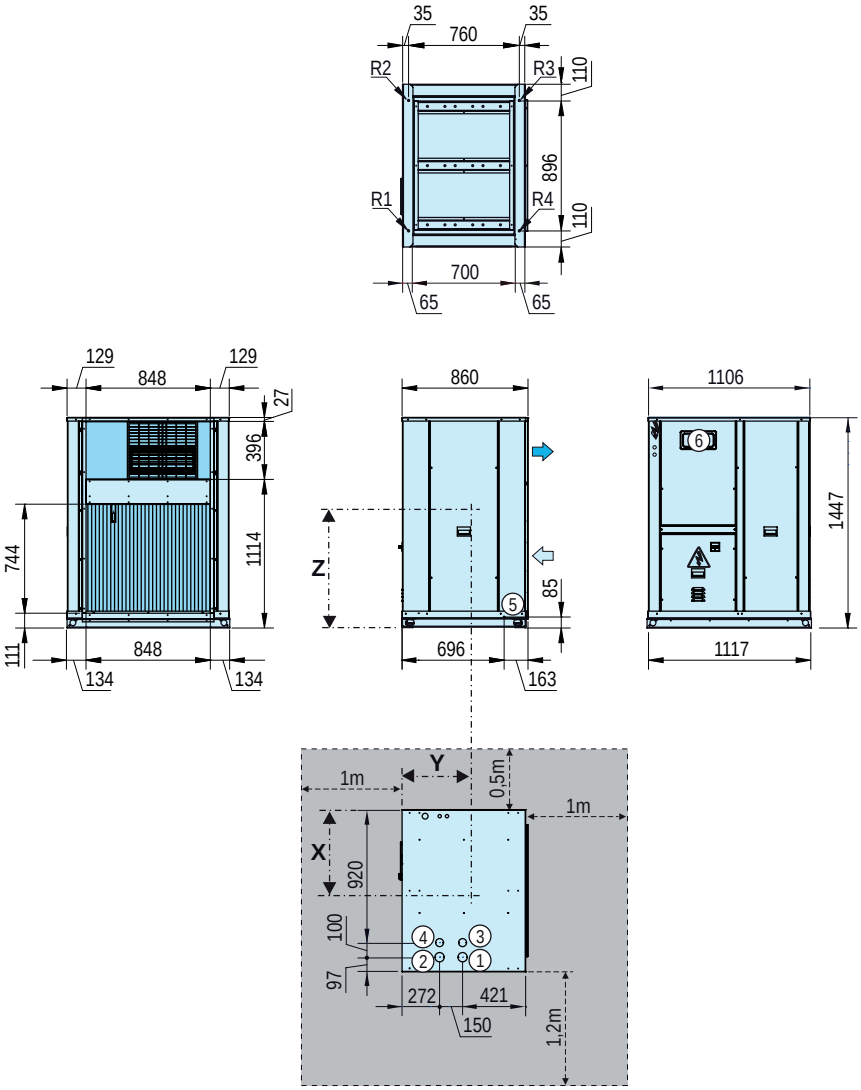

LEGEND

- HORIZONTAL outdoor circuit air supply
- Outdoor circuit air return
- Electric panel
- Electric power supply
- Door switch
- ① Water inlet to the indoor circuit
- ② Water outlet from the indoor circuit
- ③ Water outlet from the recovery circuit (optional)
- ④ Water inlet to the recovery circuit (optional)
- ⑤ Condensate outlet: trunk 3/4" M
- ⑥ Collapsible window for access to control panel (it protrudes 12 mm)

Note: the hidraulic connections ① ② protrude 58 mm

Anti-vibration anchoring: rivet nut M10

Clear space to be observed for maintenance operations and unit start-up

Models		Centre of gravity coordinates (mm)			Reactions in the supports (kg)				
		X	Y	Z	Weight	R1	R2	R3	R4
30PH	90STD	453	384	528	306	66	101	87	52
	100STD	488	398	576	315	69	93	84	60
30PHC	90STD	517	396	577	335	81	97	86	71
	100STD	515	402	574	345	82	99	90	73

Dimension schemes for the STD version

30PH/PHC - 90STD / 100STD with VERTICal supply, M01 assembly (mm)

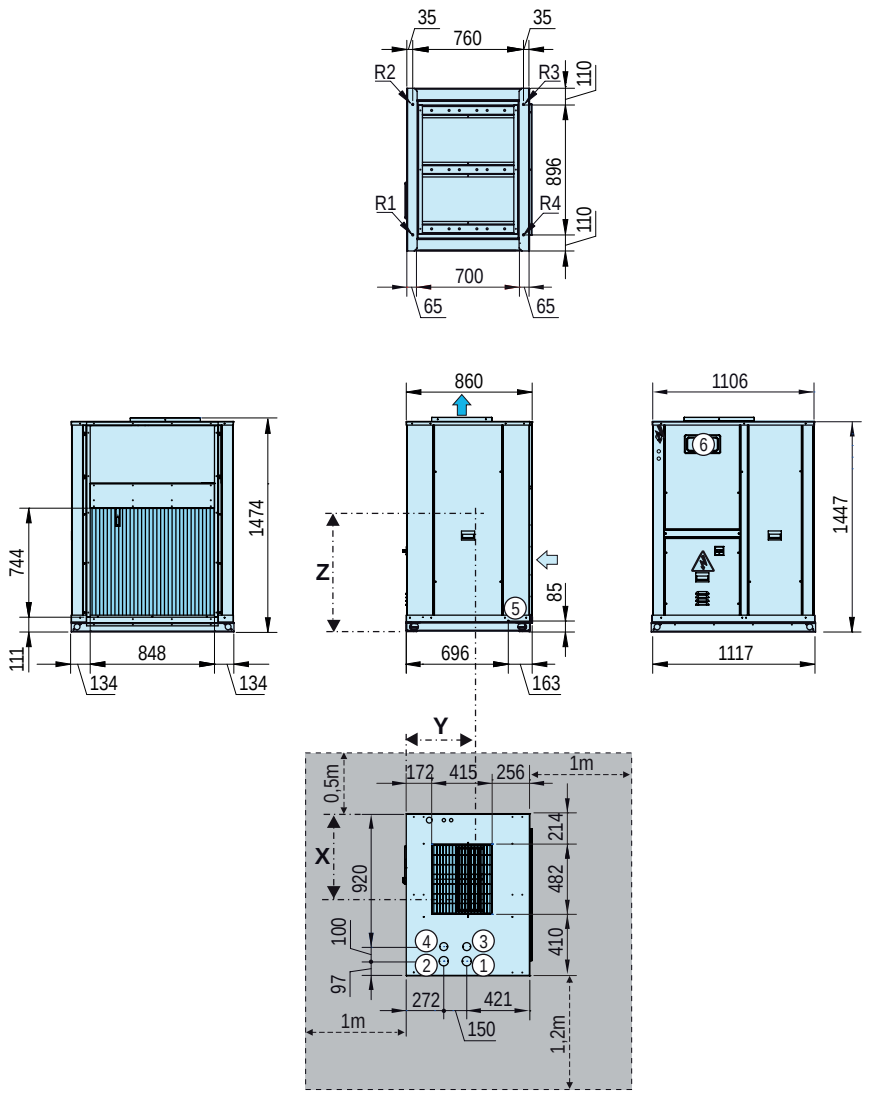

LEGEND

- VERTICAL outdoor circuit air supply
- Outdoor circuit air return
- Electric panel
- Electric power supply
- Door switch
- ① Water inlet to the indoor circuit
- ② Water outlet from the indoor circuit
- ③ Water outlet from the recovery circuit (optional)
- ④ Water inlet to the recovery circuit (optional)
- ⑤ Condensate outlet: trunk 3/4" M
- ⑥ Collapsible window for access to control panel (it protrudes 12 mm)

Note: the hidraulic connections ① ② protrude 58 mm

Anti-vibration anchoring: rivet nut M10

Clear space to be observed for maintenance operations and unit start-up

Models		Centre of gravity coordinates (mm)			Reactions in the supports (kg)				
		X	Y	Z	Weight	R1	R2	R3	R4
30PH	90STD	453	384	528	306	66	101	87	52
	100STD	488	398	576	315	69	93	84	60
30PHC	90STD	517	396	577	335	81	97	86	71
	100STD	515	402	574	345	82	99	90	73

Dimension schemes for the STD version

30PH/PHC - 120STD / 160STD / 180STD with horizontal supply, M00 assembly (mm)

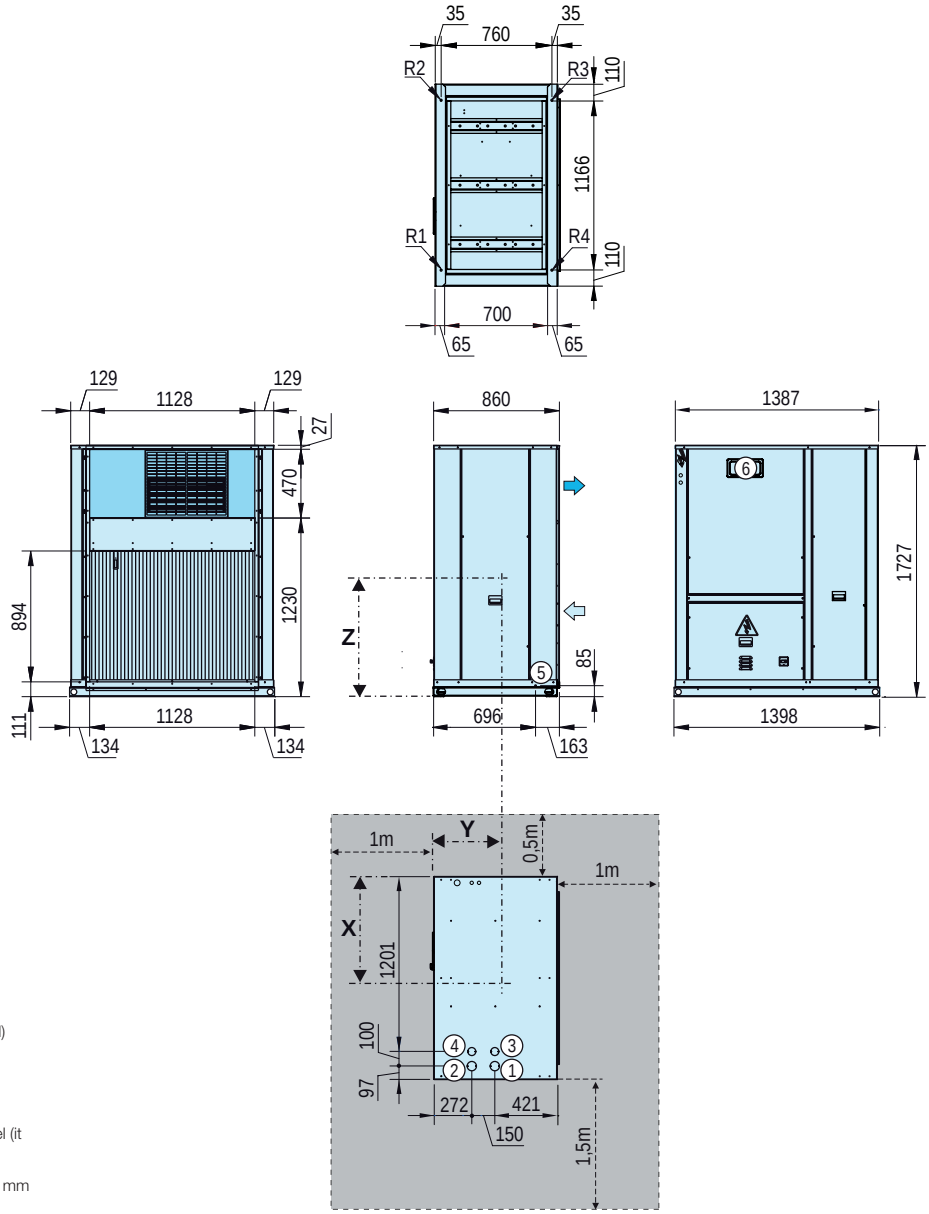

LEGEND

- HORIZONTAL outdoor circuit air supply
- Outdoor circuit air return
- Electric panel
- Electric power supply
- Door switch
- ① Water inlet to the indoor circuit
- ② Water outlet from the indoor circuit
- ③ Water outlet from the recovery circuit (optional)
- ④ Water inlet to the recovery circuit (optional)
- ⑤ Condensate outlet: trunk 3/4" M
- ⑥ Collapsible window for access to control panel (it protrudes 12 mm)

Note: the hidraulic connections ① ② protrude 58 mm

Anti-vibration anchoring: rivet nut M10

Clear space to be observed for maintenance operations and unit start-up

Models		Centre of gravity coordinates (mm)			Reactions in the supports (kg)				
		X	Y	Z	Weight	R1	R2	R3	R4
30PH	120STD	625	399	676	379	89	112	101	77
	160STD	619	400	666	397	92	119	107	79
	180STD	625	397	674	396	93	119	105	79
30PHC	120STD	645	402	673	410	99	117	107	87
	160STD	639	402	663	428	102	124	113	90
	180STD	646	400	669	429	104	123	111	91

Dimension schemes for the STD version

30PH/PHC - 120STD / 160STD / 180STD with VERTICal supply, M01 assembly (mm)

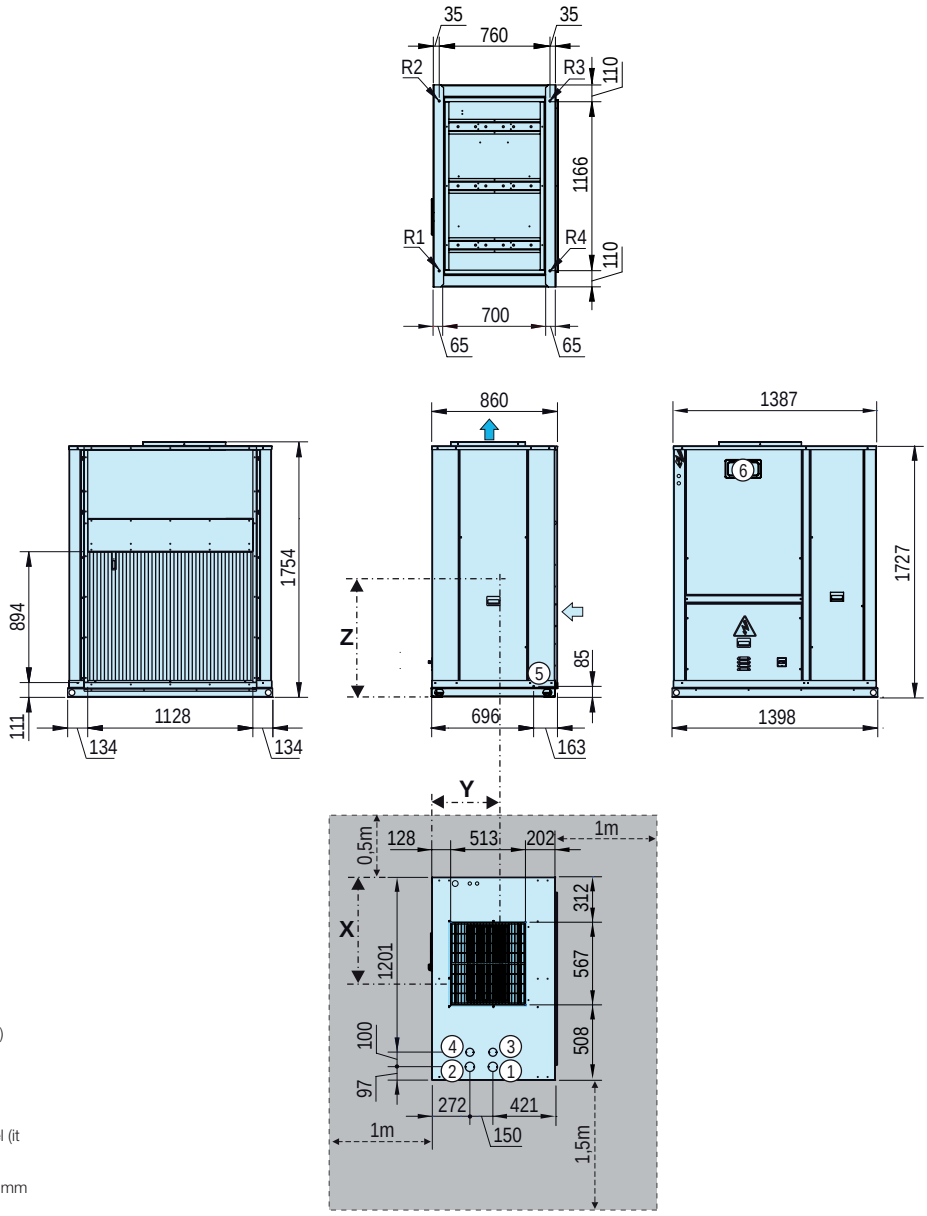

LEGEND

- VERTICAL outdoor circuit air supply
- Outdoor circuit air return
- Electric panel
- Electric power supply
- Door switch
- ① Water inlet to the indoor circuit
- ② Water outlet from the indoor circuit
- ③ Water outlet from the recovery circuit (optional)
- ④ Water inlet to the recovery circuit (optional)
- ⑤ Condensate outlet: trunk 3/4" M
- ⑥ Collapsible window for access to control panel (it protrudes 12 mm)

Note: the hidraulic connections ① ② protrude 58 mm

Anti-vibration anchoring: rivet nut M10

Clear space to be observed for maintenance operations and unit start-up

Models		Centre of gravity coordinates (mm)			Reactions in the supports (kg)				
		X	Y	Z	Weight	R1	R2	R3	R4
30PH	120STD	625	399	676	379	89	112	101	77
	160STD	619	400	666	397	92	119	107	79
	180STD	625	397	674	396	93	119	105	79
30PHC	120STD	645	402	673	410	99	117	107	87
	160STD	639	402	663	428	102	124	113	90
	180STD	646	400	669	429	104	123	111	91

Dimension schemes for the STD version

Condensation pressure control damper (mm)

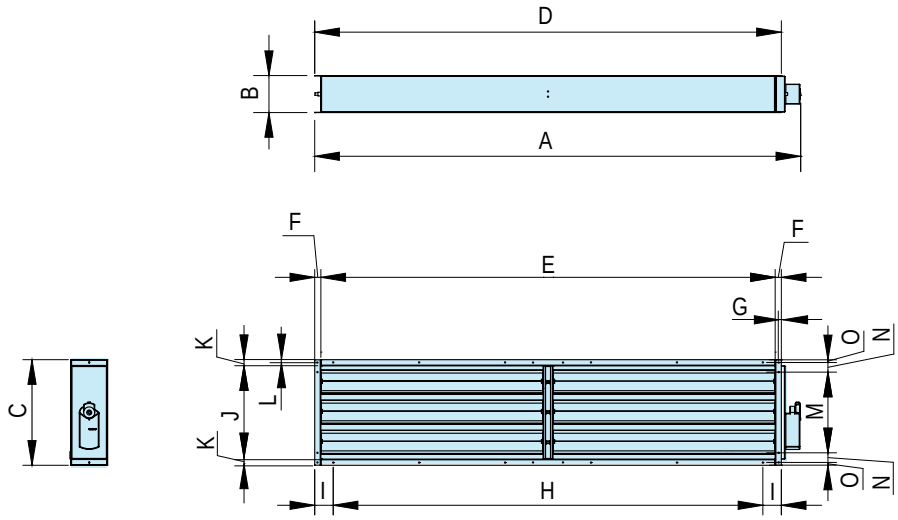

30PH / PHC	Assembly	Servos per damper	Total weight (kg)	A	B	C	D	E	F	G	H	I	J	K	L	M	N	O
90STD / 100STD	M00	1	13	978	150	446	895	845	25	11	3 x 266	49	396	25	11	296	64	11
120STD to 180STD		1	17	1258	150	520	1175	1125	25	11	4 x 269	49	470	25	11	370	64	11
90STD / 100STD	M01	1	13	633	150 (*)	428	550	500	25	11	1 x 400	75	378	25	11	278	64	11
120STD to 180STD		1	17	733	150 (*)	550	650	600	25	11	2 x 250	75	500	25	11	400	64	11

(*) In the case of vertical discharge (M01 assembly), the damper incorporates a frame (60 mm height) to fit the damper to the fan supply. This frame may be removed for duct installation.

M00 assembly

M01 assembly

Note: By default this damper is sent attached to the unit. For duct installation it is necessary to unscrew from the unit and disconnect the electrical supply of the servomotor.

Dimension schemes for the HEE version

30PH/PHC - 90HEE with HORIZONTAL supply, M00 assembly (mm)

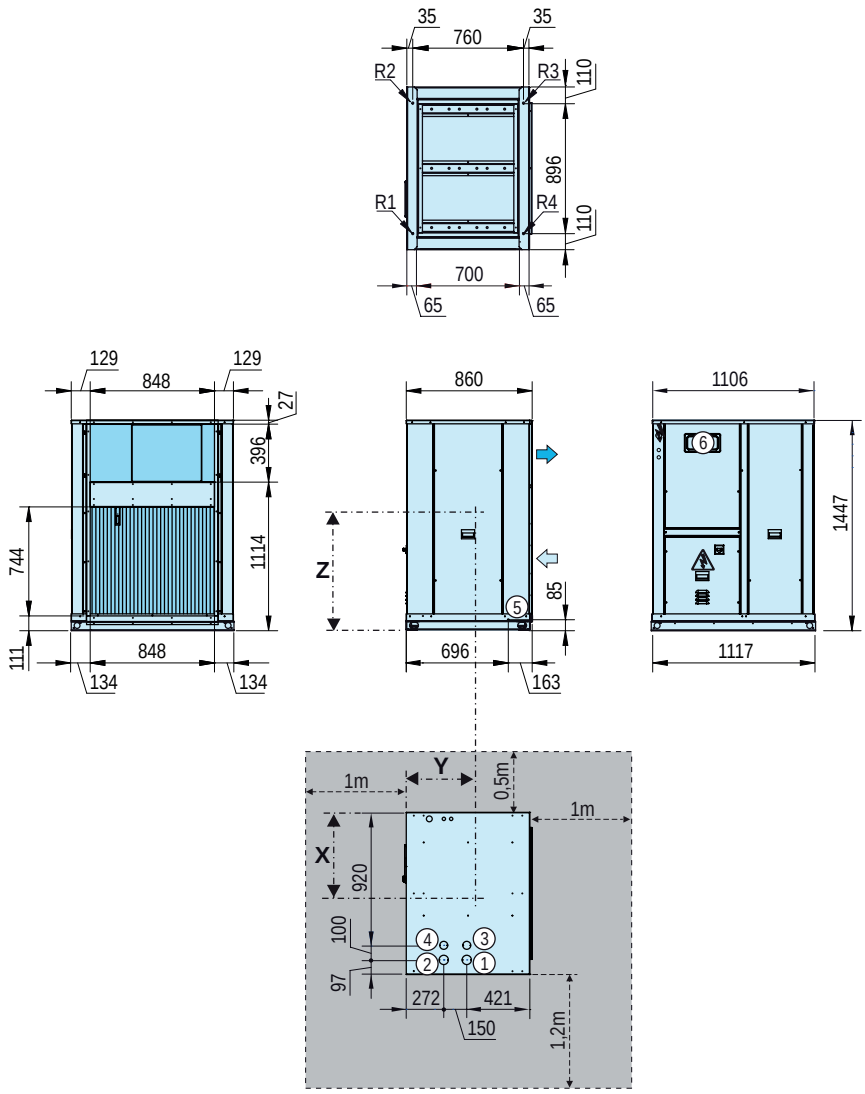

LEGEND

- HORIZONTAL outdoor circuit air supply
- Outdoor circuit air return
- Electric panel
- Electric power supply
- Door switch
- ① Water inlet to the indoor circuit
- ② Water outlet from the indoor circuit
- ③ Water outlet from the recovery circuit (optional)
- ④ Water inlet to the recovery circuit (optional)
- ⑤ Condensate outlet: trunk 3/4" M
- ⑥ Collapsible window for access to control panel (it protrudes 12 mm)

Note: the hidraulic connections ① ② protrude 58 mm

Anti-vibration anchoring: rivet nut M10

Clear space to be observed for maintenance operations and unit start-up

Models		Centre of gravity coordinates (mm)			Reactions in the supports (kg)				
		X	Y	Z	Weight	R1	R2	R3	R4
30PH	**90HEE**	502	422	614	298	64	100	85	50
30PHC	**90HEE**	538	427	599	327	77	84	87	79

Dimension schemes for the HEE version

30PH/PHC - 90HEE with VERTICal supply, M01 assembly (mm)

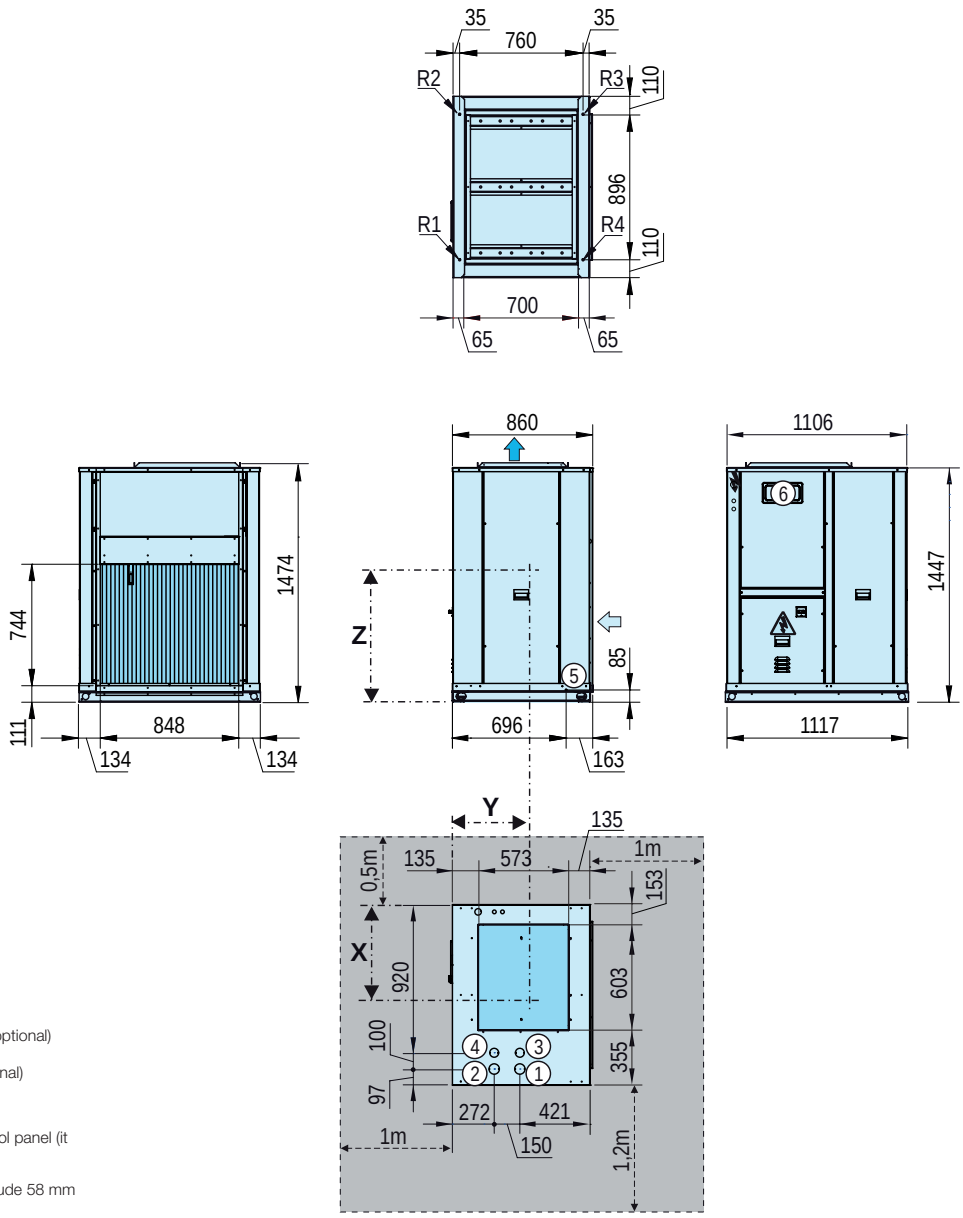

LEGEND

- VERTICAL outdoor circuit air supply
- Outdoor circuit air return
- Electric panel
- Electric power supply
- Door switch
- ① Water inlet to the indoor circuit
- ② Water outlet from the indoor circuit
- ③ Water outlet from the recovery circuit (optional)
- ④ Water inlet to the recovery circuit (optional)
- ⑤ Condensate outlet: trunk 3/4" M
- ⑥ Collapsible window for access to control panel (it protrudes 12 mm)

Note: the hidraulic connections ① ② protrude 58 mm

Anti-vibration anchoring: rivet nut M10

Clear space to be observed for maintenance operations and unit start-up

Models		Centre of gravity coordinates (mm)			Reactions in the supports (kg)				
		X	Y	Z	Weight	R1	R2	R3	R4
30PH	**90HEE**	502	422	614	298	64	100	85	50
30PHC	**90HEE**	538	427	599	327	77	84	87	79

Dimension schemes for the HEE version

30PH/PHC - 100HEE / 120HEE with HORIZONTAL supply, M00 assembly (mm)

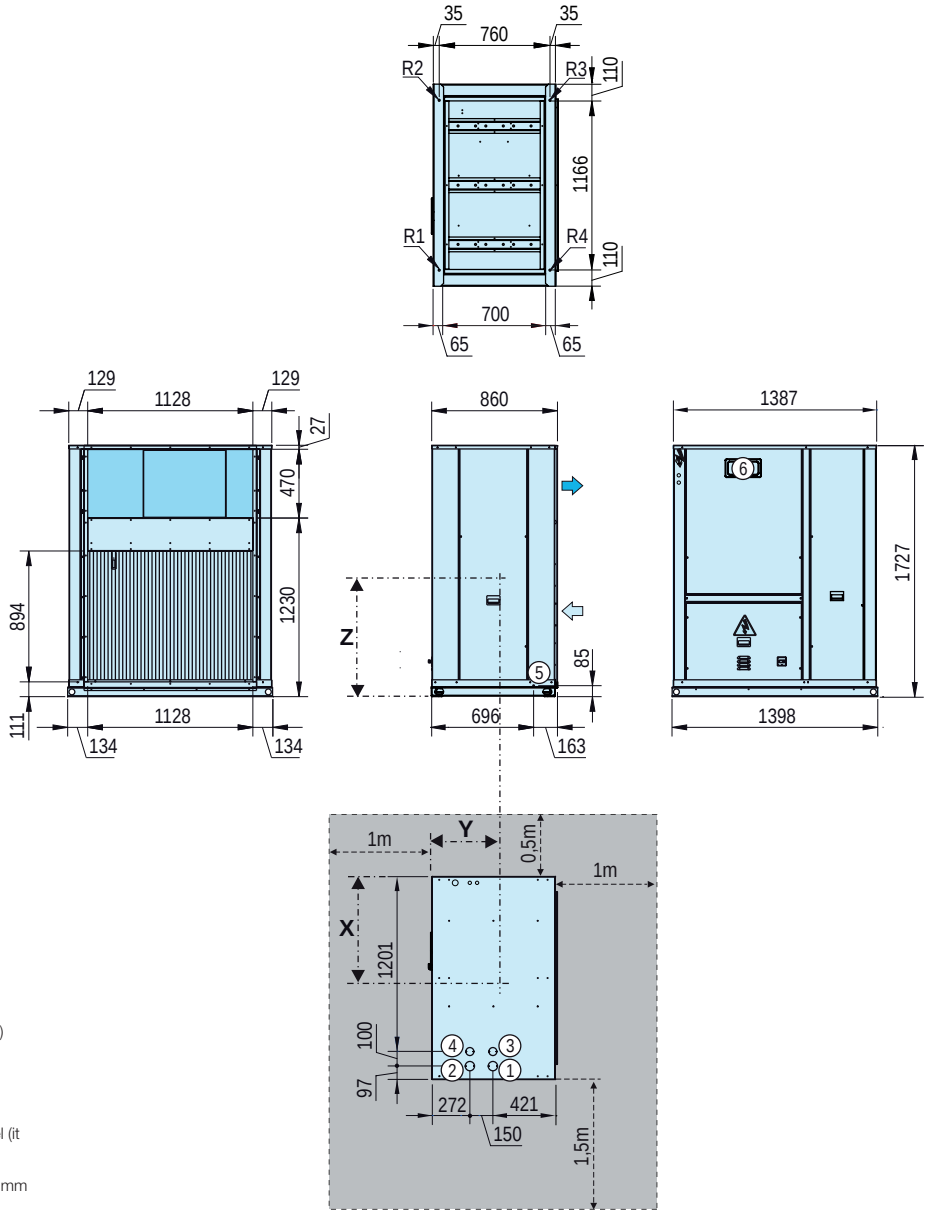

LEGEND

- HORIZONTAL outdoor circuit air supply
- Outdoor circuit air return
- Electric panel
- Electric power supply
- Door switch
- ① Water inlet to the indoor circuit
- ② Water outlet from the indoor circuit
- ③ Water outlet from the recovery circuit (optional)
- ④ Water inlet to the recovery circuit (optional)
- ⑤ Condensate outlet: trunk 3/4" M
- ⑥ Collapsible window for access to control panel (it protrudes 12 mm)

Note: the hidraulic connections ① ② protrude 58 mm

Anti-vibration anchoring: rivet nut M10

Clear space to be observed for maintenance operations and unit start-up

Models		Centre of gravity coordinates (mm)			Reactions in the supports (kg)				
		X	Y	Z	Weight	R1	R2	R3	R4
30PH	100HEE	569	417	673	358	63	127	116	52
	120HEE	628	426	742	376	88	112	100	77
30PHC	100HEE	638	418	623	390	88	109	107	86
	120HEE	696	427	674	408	100	101	104	103

Dimension schemes for the HEE version

30PH/PHC - 100HEE / 120HEE with VERTICAL supply, M01 assembly (mm)

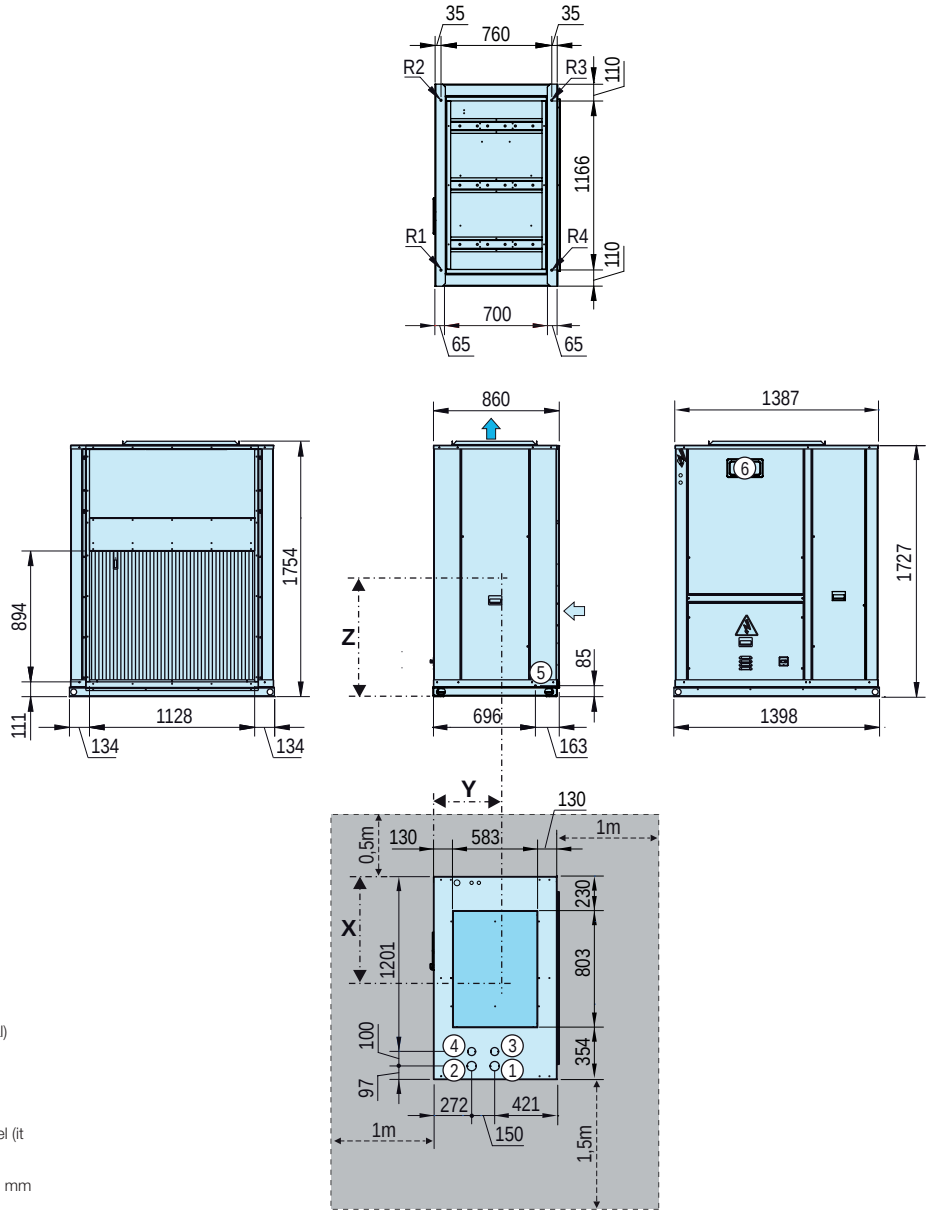

LEGEND

- VERTICAL outdoor circuit air supply
- Outdoor circuit air return
- Electric panel
- Electric power supply
- Door switch
- ① Water inlet to the indoor circuit
- ② Water outlet from the indoor circuit
- ③ Water outlet from the recovery circuit (optional)
- ④ Water inlet to the recovery circuit (optional)
- ⑤ Condensate outlet: trunk 3/4" M
- ⑥ Collapsible window for access to control panel (it protrudes 12 mm)

Note: the hidraulic connections ① ② protrude 58 mm

Anti-vibration anchoring: rivet nut M10

Clear space to be observed for maintenance operations and unit start-up

Models		Centre of gravity coordinates (mm)			Reactions in the supports (kg)				
		X	Y	Z	Weight	R1	R2	R3	R4
30PH	100HEE	569	417	673	358	63	127	116	52
	120HEE	628	426	742	376	88	112	100	77
30PHC	100HEE	638	418	623	390	88	109	107	86
	120HEE	696	427	674	408	100	101	104	103

Dimension schemes for the HEE version

30PH/PHC - 160HEE / 180HEE with HORIZONTAL supply, M00 assembly (mm)

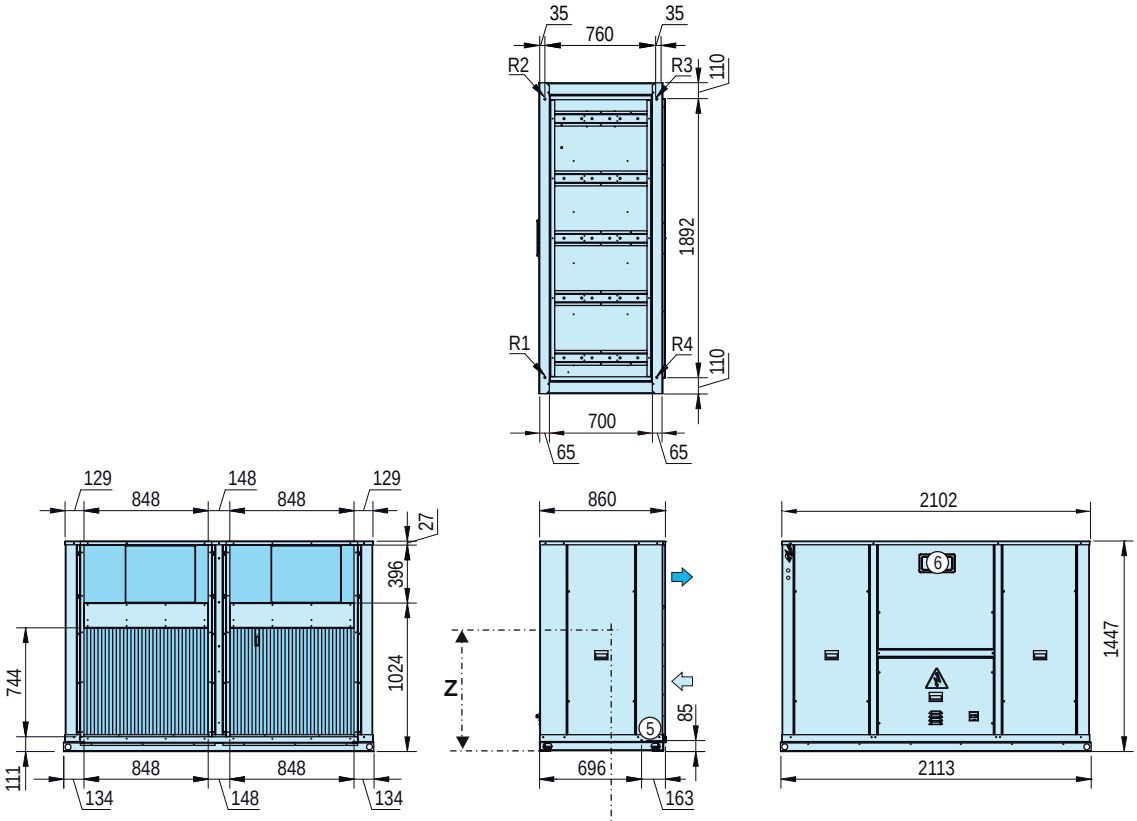

LEGEND

- HORIZONTAL outdoor circuit air supply
- Outdoor circuit air return
- Electric panel
- Electric power supply
- Door switch
- ① Water inlet to the indoor circuit
- ② Water outlet from the indoor circuit
- ③ Water outlet from the recovery circuit (optional)
- ④ Water inlet to the recovery circuit (optional)
- ⑤ Condensate outlet: trunk 3/4" M
- ⑥ Collapsible window for access to control panel (it protrudes 12 mm)

Note: the hidraulic connections ① ② protrude 58 mm

Anti-vibration anchoring: rivet nut M10

Clear space to be observed for maintenance operations and unit start-up

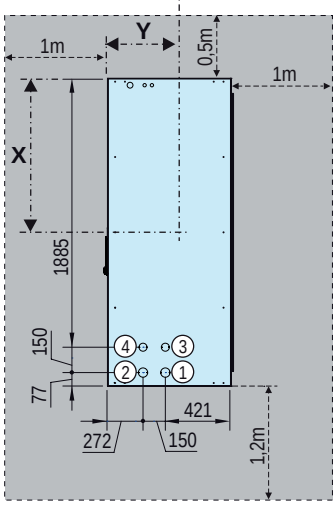

Models		Centre of gravity coordinates (mm)			Reactions in the supports (kg)				
		X	Y	Z	Weight	R1	R2	R3	R4
30PH	160HEE	940	435	573	465	69	177	163	56
	180HEE	936	434	579	468	71	178	163	56
30PHC	160HEE	975	436	570	497	109	130	140	118
	180HEE	972	436	575	503	110	132	142	119

Dimension schemes for the HEE version

30PH/PHC - 160HEE / 180HEE with VERTICAL supply, M01 assembly (mm)

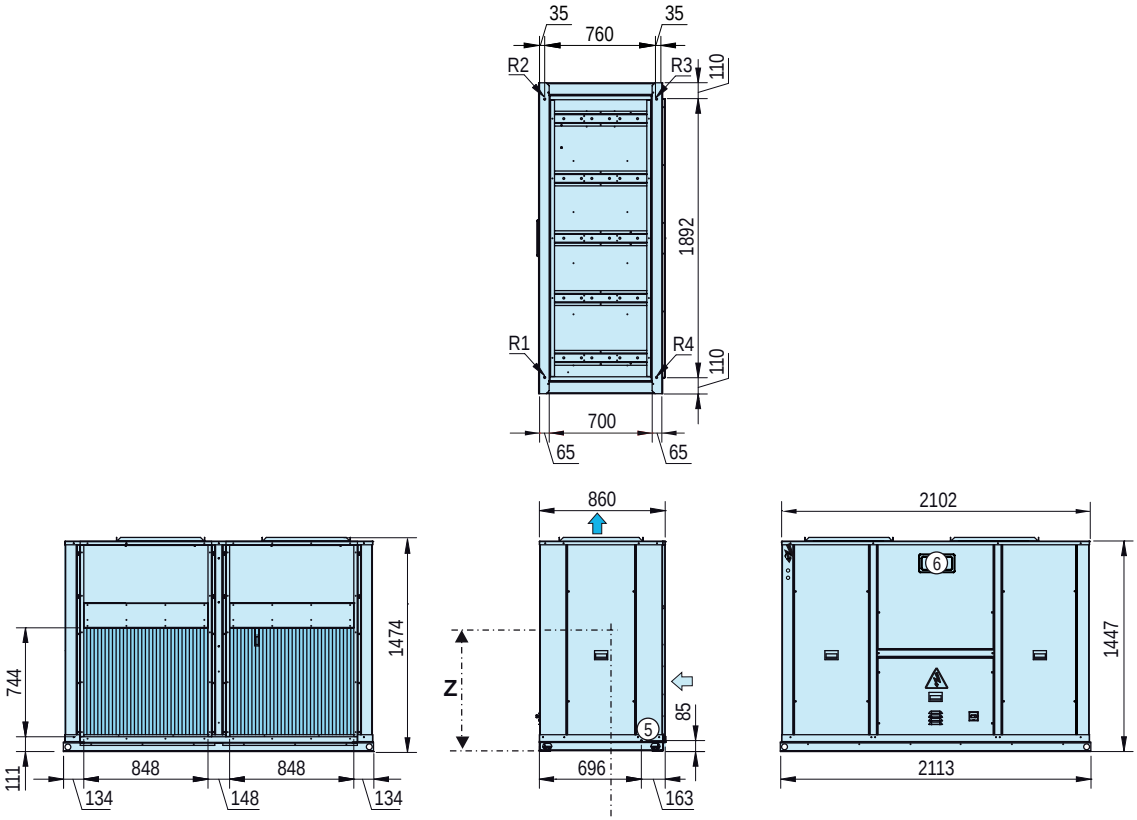

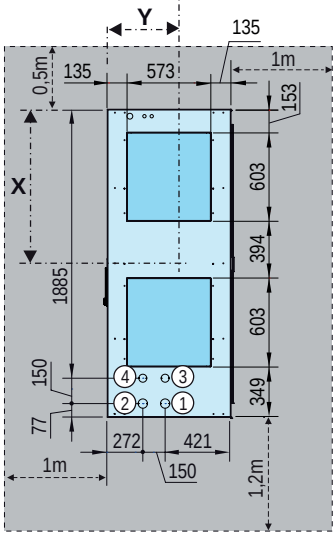

LEGEND

- VERTICAL outdoor circuit air supply
- Outdoor circuit air return
- Electric panel
- Electric power supply
- Door switch
- ① Water inlet to the indoor circuit
- ② Water outlet from the indoor circuit
- ③ Water outlet from the recovery circuit (optional)
- ④ Water inlet to the recovery circuit (optional)
- ⑤ Condensate outlet: trunk 3/4" M
- ⑥ Collapsible window for access to control panel (it protrudes 12 mm)

Note: the hidraulic connections ① ② protrude 58 mm

Anti-vibration anchoring: rivet nut M10

Clear space to be observed for maintenance operations and unit start-up

Models		Centre of gravity coordinates (mm)			Reactions in the supports (kg)				
		X	Y	Z	Weight	R1	R2	R3	R4
30PH	160HEE	940	435	573	465	69	177	163	56
	180HEE	936	434	579	468	71	178	163	56
30PHC	160HEE	975	436	570	497	109	130	140	118
	180HEE	972	436	575	503	110	132	142	119

Dimensions of air flexible ducts (Option)

Supply ducts

STD version	Dimensions (mm)			Weight (kg)
	A	B	C	
M00 assembly without damper ①				
90STD / 100STD	859	407	132	4
120STD / 160STD / 180STD	1139	481	132	5
M00 assembly with damper ①				
90STD / 100STD	859	407	132	4
120STD / 160STD / 180STD	1139	481	132	5
M01 assembly without damper ①				
90STD / 100STD	552	430	152	4
120STD / 160STD / 180STD	652	552	152	5
M01 assembly with damper ①				
90STD / 100STD	513	391	132	4
120STD / 160STD / 180STD	613	513	132	5

HEE version	Dimensions (mm)			Weight (kg)
	A	B	C	
M00 assembly				
90HEE	859	407	132	4
100HEE / 120HEE	1139	481	132	5
160HEE / 180HEE	1854	407	132	7
M01 assembly				
90HEE	633	589	132	4
100HEE / 120HEE	817	639	132	5
160HEE / 180HEE	1619	590	132	7

M00 asssembly:
Horizontal supply

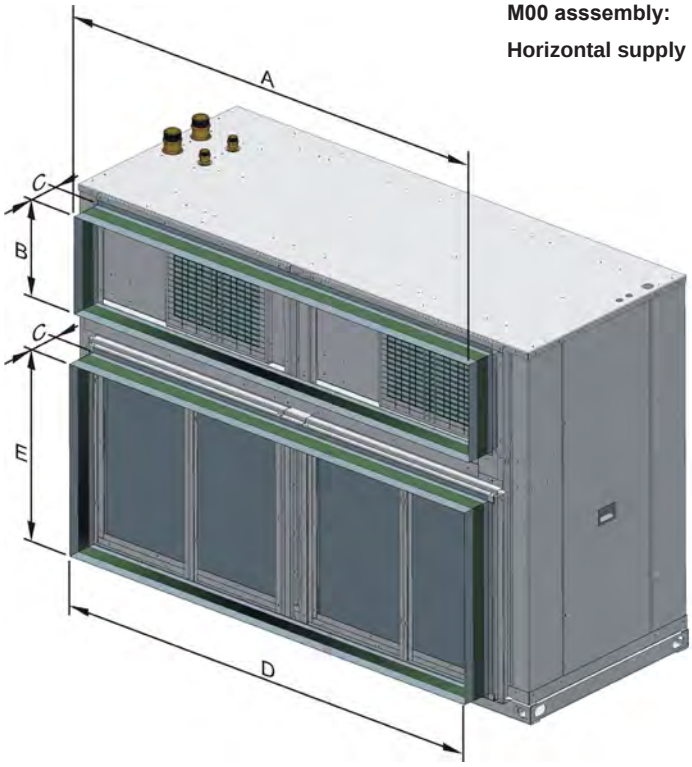

Return ducts

STD version	Dimensions (mm)			Weight (kg)
	C	D	E	
Assembly without filters				
90STD / 100STD	132	903	800	5
120STD / 160STD / 180STD	132	1183	950	7
Assembly with filters				
90STD / 100STD	109	903	800	5
120STD / 160STD / 180STD	109	1183	950	7

HEE version	Dimensions (mm)			Weight (kg)
	C	D	E	
Assembly without filters				
90HEE	132	903	800	5
100HEE / 120HEE	132	1183	950	7
160HEE / 180HEE	132	1897	800	8
Assembly with filters				
90HEE	109	903	800	5
100HEE / 120HEE	109	1183	950	7
160HEE / 180HEE	109	1897	800	8

M01 asssembly:
Vertical supply

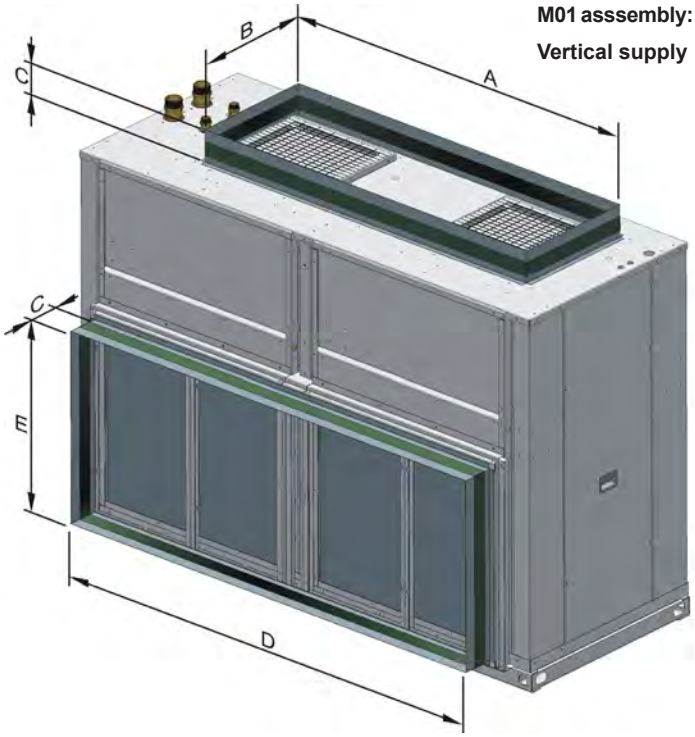

① Damper for condensation pressure control (optional): add the height of the damper to the flexible duct.

Gravimetric filters in the return air (option)

Air pressure drop

30PH / PHC	Nominal air flow (m^3/h)	Pressure drop (mm.w.c.)
90STD	6500	4,9
100STD	7000	5,7
120STD	10000	4,6
160STD / 180STD	12200	6,8

30PH / PHC	Nominal air flow (m^3/h)	Pressure drop (mm.w.c.)
90HEE	6500	4,9
100HEE	7000	2,2
120HEE	10000	4,6
160HEE	12200	4,3
180HEE	14000	5,7

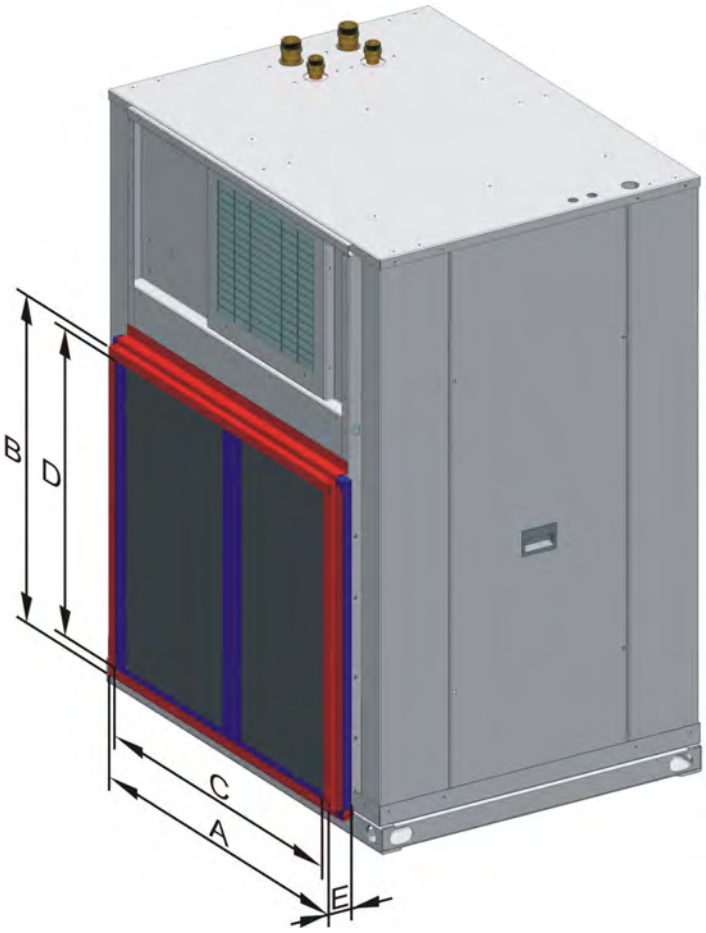

Dimensions (mm)

30PH / PHC	Frames number	Frame dimensions (mm)					Distance between frames (mm)	Cells number	Cell thickness (mm)	Cell size (mm)	Total weight (mm)
		A	B	C	D	E					
90STD / 100STD	1	896	795	848	744	53	---	2	25	818 x 468	6
120STD / 160STD / 180STD	1	1176	945	1128	894	53	---	3	25	968 x 405	8

30PH / PHC	Frames number	Frame dimensions (mm)					Distance between frames (mm)	Cells number	Cell thickness (mm)	Cell size (mm)	Total weight (mm)
		A	B	C	D	E					
90HEE	1	896	795	848	744	53	---	2	25	818 x 468	6
100HEE / 120HEE	1	1176	945	1128	894	53	---	3	25	968 x 405	8
160HEE / 180HEE	2	896	795	848	744	53	100	4	25	818 x 468	12

Filters frame is removable, and on request, can be supplied separate from the unit for connection on site.

30RQS

Nominal heating capacity 42-158 kW
Nominal cooling capacity 38-149 kW

HEATING

AQUASNAP Reversible

Commercial and industrial applications

Compact design

Quiet operation

Variable water flow (optional)

Partial heat reclaim

The AquaSnap range of liquid chillers/air-to-water heat pumps was designed for commercial (air conditioning of offices, hotels etc.) or industrial (low-temperature process units etc.) applications.

The AquaSnap integrates the latest technological innovations:

- Non-ozone depleting refrigerant R410A
- Scroll compressors
- Low-noise fans made of a composite material
- Auto-adaptive microprocessor control
- Electronic expansion valve
- Variable-speed pump (option)

The AquaSnap can be equipped with a hydronic module integrated into the unit chassis, limiting the installation to straightforward operations like connection of the power supply and the chilled water supply and return piping.

Physical data

EUROVENT CERTIFIED PERFORMANCE
www.eurovent-certification.com

30RQS				039	045	050	060	070	078	080	090	100	120	140	160
Cooling															
Full load performances*	C1	Nominal capacity	kW	38	43.5	49.8	58.5	63.6	73.7	77.7	85.6	95.9	113.2	131.6	149.4
	C1	EER	kW/kW	2.84	2.70	2.65	2.77	2.70	2.58	2.79	2.70	2.70	2.69	2.77	2.58
	C1	Eurovent Energy Class		C	C	D	C	C	D	C	C	C	D	C	D
	C2	Nominal capacity	kW	47.5	54.4	63.2	71.3	78.9	93	97.4	107.9	117.7	143.2	163.1	186.8
	C2	EER	kW/kW	3.28	3.16	3.09	3.12	3.08	2.97	3.19	3.14	3.1	3.1	3.17	2.92
Seasonal Efficiency*		ESEER	kW/kW	3.80	3.77	3.81	3.61	3.61	3.57	3.84	3.77	3.88	4.04	3.75	3.67
Heating															
Full load performances*	H1	Nominal capacity	kW	42.7	46.9	54.5	63.0	71.4	79.7	82.5	95.0	103.0	120.9	141.3	162.2
	H1	COP	kW/kW	3.72	3.72	3.76	3.73	3.72	3.47	3.74	3.74	3.77	3.73	3.73	3.59
	H1	Eurovent Energy Class		D	D	C	D	D	E	D	D	C	D	D	E
	H2	Nominal capacity	kW	41.8	46.7	53.4	61.4	69.6	77.5	79.7	92.8	100.9	116.9	137.8	157.9
	H2	COP	kW/kW	3.08	3.05	3.03	3.03	3.06	2.87	3.08	3.02	3.09	3.06	3.07	2.97
	H2	Eurovent Energy Class		B	B	B	B	B	C	B	B	B	B	B	C
Seasonal Efficiency**	H1	Energy Class		A	A	A+	A	A	A	A	-	-	-	-	-
	H1	SCOP	kW/kW	3.07	3.1	3.21	3.07	3.1	2.96	3.14	3.17	3.23	3.23	3.14	3.13
	H1	ηs heat	%	120	121	125	120	121	115	123	124	126	126	123	122
		Prated	KW	33	37	42	51	57	65	66	76	83	97	113	131
Sound Power Level Standard Unit			dB(A)	80	81	81	86	87	87	84	84	84	84	90	90
Operating weight†															
Standard unit without hydronic module			kg	506	513	539	552	553	560	748	895	903	959	1060	1078
Standard unit with hydronic module															
Single high-pressure pump			kg	535	543	569	582	582	590	778	927	935	995	1099	1117
Dual high-pressure pump			kg	561	569	594	608	608	616	804	972	980	1043	1136	1127
Compressor				Hermetic scroll compressors, 48.3 r/s											
Circuit A/B				2/-	2/-	2/-	2/-	2/-	2/-	2/-	3/-	3/-	3/-	2/2	2/2
Refrigerant				R-410A											
Capacity control				Touch Pilot Junior											
Air heat exchangers				Grooved copper tubes and aluminium fins											
Fans				Axial Flying Bird IV with rotating shroud											
Quantity				1	1	1	1	1	1	2	2	2	2	2	2
Total air flow (at high speed)			l/s	3800	3800	3800	5300	5300	5300	7600	7600	7600	7600	10600	10600
Water heat exchanger				Direct expansion, plate heat exchanger											
Hydronic module (option)				Single or dual pump, Victaulic screen filter, safety valve, expansion tank, purge valves (water and air), pressure sensors											
Dimensions															
Length			mm	1090						2273					
Depth			mm	2109						2136					
Height			mm	1330						1330					

C1 Cooling mode conditions: Water heat exchanger, entering/leaving temperature 12°C/7°C, fouling factor 0 m² K/W. Outside air temperature 35°C
C2 Cooling mode conditions::Water heat exchanger, entering/leaving temperature 23°C/18°C, fouling factor 0 m² K/W. Outside air temperature 35°C
H1 Heating mode conditions: Water heat exchanger water entering/leaving temperature 30°C/35°C, fouling factor 0 m² K/W. Outside air temperature 7°C db/6°C wb,
H2 Heating mode conditions: Water heat exchanger water entering/leaving temperature 40°C/45°C, fouling factor 0 m² K/W. Outside air temperature 7°C db/6°C wb,
* In accordance with standard EN14511-3:2013
** In accordance with standard EN14825:2013, average climate
† Weight shown is a guideline only.

Eurovent certified data

Eurovent certified data

Electrical data

30RQS without hydronic module		039	045	050	060	070	078	080	090	100	120	140	160
Power circuit													
Nominal power supply	V-ph-Hz	400-3-50 ± 10%											
Control circuit supply		24 V via internal transformer											
Maximum start-up current (Un)*													
Standard unit	A	113.8	134.8	142.8	145.8	176.0	213.0	213.6	173.6	207.6	247.6	243.0	286.0
Unit with electronic starter option	A	74.7	86.5	93.8	96.2	114.4	139.8	139.8	-	-	-	-	-
Maximum operating power input**	kW	19.5	22.3	24.5	27.9	31.2	35.8	35.6	42.3	45.6	52.5	62.4	71.6
Nominal unit operating current draw***	A	25.6	29.0	33.0	36.0	42.4	52.8	53.4	55.4	61.7	77.3	84.8	105.6

* Maximum instantaneous start-up current at operating limit values (maximum operating current of the smallest compressor(s) + fan current + locked rotor current of the largest compressor).

** Power input, compressors and fans, at the unit operating limits (saturated suction temp. 10°C, saturated condensing temp. 65°C) and nominal voltage of 400 V (data given on the unit nameplate).

*** Standardised Eurovent conditions: evaporator entering/leaving water temperature 12°C/7°C, outside air temperature 35°C.

Options

Options	No.	Description	Advantages	Use 30RQS
Condenser with pre-treated fins	3A	Fins made of pre-treated aluminium (polyurethane and epoxy)	Improved corrosion resistance, recommended for marine environments	RQS 039-160*
Low temperature glycol solution	5B	Low temperature chilled water production down to 0°C with ethylene glycol and propylene glycol. Note: With option 5B the units are equipped with traditional coils (Cu/Al).	Covers specific applications down to 0°C	RQS 039-160
Very low temperature glycol solution	6B	Low temperature chilled water production down to -15°C with ethylene glycol and -12°C with propylene glycol. Note: With option 6B the units are equipped with traditional coils (Cu/Al).	Covers specific applications such as ice storage and industrial processes	RQS 039-160
Very low noise level	15LS	Acoustic compressor enclosure and low-speed fans	Noise emission reduction at reduced fan speed	RQS 039-160
Soft starter	25	Electronic compressor starter	Reduced compressor start-up current	RQS 039-160
Winter operation**	28	Fan speed control via frequency converter	Stable unit operation when the air temperature is between -10°C and -20°C	RQS 039-160
Frost protection down to -20°C	42	Electric heater on the hydronic module	Hydronic module frost protection at low outside temperatures	RQS 039-160
Partial heat reclaim	49	Partial heat reclaim by desuperheating of the compressor discharge gas. Note: With option 49 the units are equipped with traditional coils (Cu/Al).	Free high-temperature hot-water production simultaneously with chilled and hot-water production	RQS 039-160
Master/slave operation	58	Unit equipped with an additional field-installed leaving water temperature sensor, allowing master/slave operation of two units connected in parallel	Operation of two units connected in parallel with operating time equalisation	RQS 039-160
Main disconnect switch without fuse	70	Factory-installed main electric disconnect switch in the control box	Ease-of-installation and compliance with local electrical regulations	RQS 039-160
HP single-pump hydronic module	116B	Single high-pressure water pump, water filter, expansion tank, temperature and pressure sensors. See hydronic module option.	Easy and fast installation	RQS 039-160

Options	No.	Description	Advantages	Use 30RQS
HP dual-pump hydronic module	116C	Dual high-pressure water pump, water filter, expansion tank, temperature and pressure sensors. See hydronic module option.	Easy and fast installation, operating safety	RQS 039-160
LP single-pump hydronic module	116F	Single low-pressure water pump, water filter, expansion tank, temperature and pressure sensors. See hydronic module option.	Easy and fast installation	RQS 039-160
LP dual-pump hydronic module	116G	Dual low-pressure water pump, water filter, expansion tank, temperature and pressure sensors. See hydronic module option.	Easy and fast installation, operating safety	RQS 039-160
HP variable-speed single-pump hydronic module	116J	Single high-pressure water pump, water filter, expansion tank, temperature and pressure sensors. See hydronic module option.	Easy and fast installation, reduced power consumption of the water circulation pump	RQS 039-160
HP variable-speed dual-pump hydronic module	116K	Dual high-pressure water pump, water filter, expansion tank, temperature and pressure sensors. See hydronic module option.	Easy and fast installation, operating safety, reduced power consumption of the water circulation pump	RQS 039-160
HP single-pump hydronic module without expansion tank	116R	Single high-pressure water pump, water filter, temperature and pressure sensors. See hydronic module option.	Easy and fast installation	RQS 039-160
HP dual-pump hydronic module without expansion tank	116S	Dual high-pressure water pump, water filter, temperature and pressure sensors. See hydronic module option.	Easy and fast installation, operating safety	RQS 039-160
LP single-pump hydronic module	116T	Single low-pressure water pump, water filter, temperature and pressure sensors. See hydronic module option.	Easy and fast installation	RQS 039-160
LP dual-pump hydronic module	116U	Dual low-pressure water pump, water filter, temperature and pressure sensors. See hydronic module option.	Easy and fast installation, operating safety	RQS 039-160
High-pressure variable-speed single-pump hydronic module	116V	Single high-pressure water pump, water filter, temperature and pressure sensors. See hydronic module option.	Easy and fast installation, reduced power consumption of the water circulation pump	RQS 039-160
HP variable-speed dual-pump hydronic module	116W	Dual high-pressure water pump, water filter, temperature and pressure sensors. See hydronic module option.	Easy and fast installation, operating safety, reduced power consumption of the water circulation pump	RQS 039-160
JBus gateway	148B	Two-directional communications board, complies with JBus protocol	Easy connection by communication bus to a building management system	RQS 039-160
Bacnet gateway	148C	Two-directional communications board, complies with Bacnet protocol	Easy connection by communication bus to a building management system	RQS 039-160
LonTalk gateway	148D	Two-directional communications board, complies with Lon Talk protocol	Easy connection by communication bus to a building management system	RQS 039-160
Water heat exchanger screw connection sleeves	264	Inlet/outlet screw connection sleeves	Permit connection of the unit to a screw connection	RQS 039-160
Welded evaporator water connection kit	266	Victaulic piping connections with welded joints	Permit connection of the unit to a connection other than a Victaulic connection	RQS 039-160
Reinforced ECM filtration for fan VFD***	282A	Fan variable frequency drive compliance to IEC 61800-3 C1 class	Allows unit installation in domestic residential environment by reducing electromagnetic interferences	RQS 039-160
Reinforced ECM filtration for pump VFD****	282B	Pump variable frequency drive compliance to IEC 61800-3 C1 class	Allows unit installation in domestic residential environment by reducing electromagnetic interferences	RQS 039-160

* RQS 039-160 with option 49 or 30RBS 0039-160 with option 6B.

** Winter operation option: This option allows operation of the unit down to -20°C outside air temperature due to the optimised control of the condensing temperature. One fan is equipped with a frequency converter.

*** RQS 039-160 with option 5B or 6B or 28

**** RQS 039-160 with option 116 J or K or V or W

Brine Options (option 5B & option 6B)

This option allows production of brine down to 0°C (option 5B) / -15°C (option 6B). The unit is equipped with suction pipe insulation (option 6B only) and a fan frequency converter.

Note: With options 5B & 6B the units are equipped with traditional coils (Cu/Al).

The operating range is a function of the suction pressure, which in turn is a function of:

- The brine type
- The brine concentration
- The flow rate
- The brine temperature
- The condensing pressure (ambient temperature).

Operating range with 45% ethylene glycol

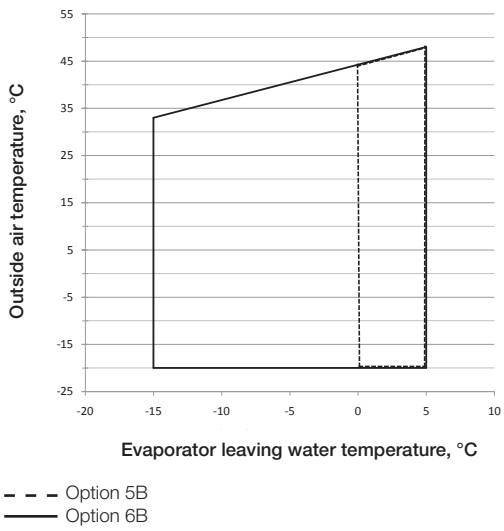

Partial heat reclaim using desuperheaters (option 49)

This option permits the production of free hot water using heat reclaim by desuperheating the compressor discharge gases. The option is available for the whole RQS range, that are equipped with traditional Cu/Al coils.

A plate heat exchanger is installed in series with the air condenser coils on the compressor discharge line of each circuit.

Physical data, 30RQS units with partial heat reclaim using desuperheaters (option 49)

30RQS partial heat reclaim mode		039	045	050	060	070	078	080	090	100	120	140	160
Operating weight units with RTPF coils*													
Standard unit without hydronic module	kg	515	522	548	561	562	569	762	909	917	973	1088	1106
Standard unit with hydronic module option													
Single high-pressure pump	kg	544	552	578	591	591	599	792	941	949	1009	1127	1145
Dual high-pressure pump	kg	570	578	603	617	617	625	818	986	994	1057	1164	1155
Refrigerant charge, units with RTPF coils		R-410A											
Circuit A	kg	12.5	13.5	16.5	17.5	18.0	16.5	21.5	27.5	28.5	33.0	19.0	18.5
Circuit B	kg	-	-	-	-	-	-	-	-	-	-	19.0	18.5
Condensers		Grooved copper tubes. aluminium fins											
Desuperheaters on circuits A and B		Plate heat exchangers											
Water volume, circuit A	l	0.549	0.549	0.549	0.732	0.732	0.732	0.732	0.976	0.976	0.976	0.732	0.732
Water volume, circuit B	l	-	-	-	-	-	-	-	-	-	-	0.732	0.732
Max. water-side operating pressure without hydronic module	kPa	1000	1000	1000	1000	1000	1000	1000	1000	1000	1000	1000	1000
Water connections		Cylindrical, male gas thread											
Connections	in	1	1	1	1	1	1	1	1	1	1	1	1
Outside diameter	mm	42	42	42	42	42	42	42	42	42	42	42	34

* Weights shown are a guideline only.

Operating limits

Desuperheater		Minimum	Maximum
Entering water temperature at start-up	°C	25*	60
Leaving water temperature during operation	°C	30	65
Air condenser		**Minimum**	**Maximum**
Outside air temperature	°C	-10	46

* The entering water temperature at start-up must not be lower than 25°C. For installations with a lower temperature a three-way valve is necessary.

Hydronic module (option 116)

This module is equipped with pressure transducers to optimise unit operation at the hydronic level.

The hydronic module option reduces the installation time. The unit is factory-equipped with the main hydronic components required for the system: screen filter, water pump, expansion tank, safety valve and water pressure transducers.

The pressure transducers allow the Touch Pilot Junior control to:

- Display the available pressure at the unit outlet and the static system pressure
- Calculate the instantaneous flow rate, using an algorithm that integrates the unit characteristics
- Integrate the system and water pump protection devices (lack of water, water pressure, water flow rate etc.)

Several water pump types are available: primary single or dual low-pressure pump or single or dual high-pressure pump.

An automatic pump start-up algorithm protects the heat exchanger and the hydronic module piping against frost down to -10°C(30RBS)/0°C(30RQS) outside temperature, if the water heat exchanger frost protection option is installed. If necessary increased frost protection down to -20°C is possible by adding heaters to the hydronic module piping (see option 42).

The hydronic module option is integrated into the unit without increasing its dimensions and saves the space normally used for the water pump.

Typical hydronic circuit diagram

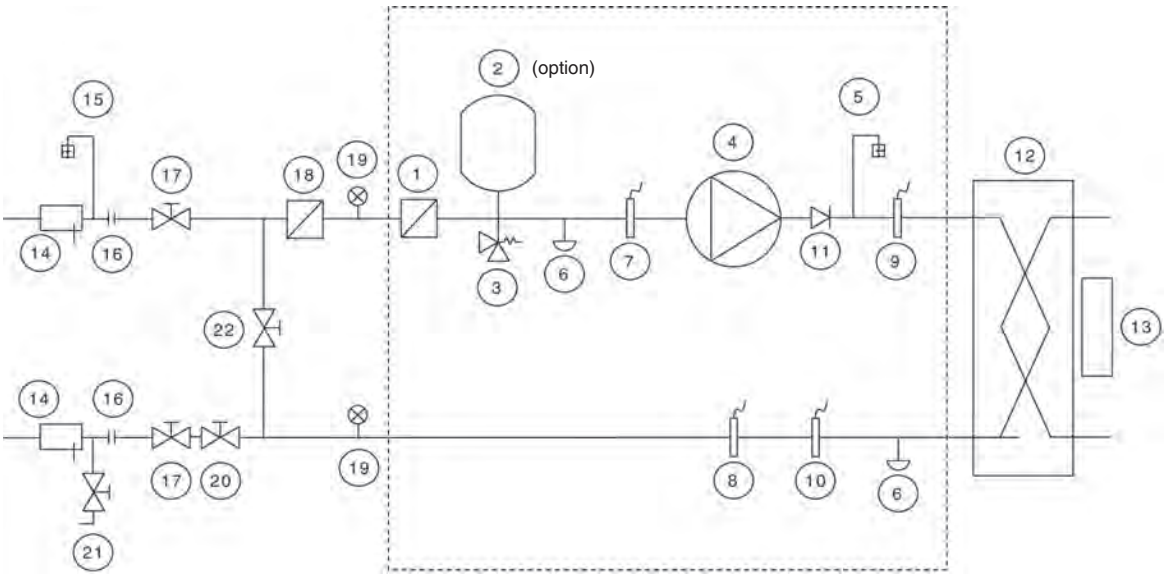

Legend

Components of the unit and hydronic module

1 Victaulic screen filter
2 Expansion tank (option)
3 Safety valve
4 Available pressure pump
Note: x 1 for a single pump, x 2 for a dual pump
5 Air purge
6 Water drain valve
Note: A second valve is located on the heat exchanger leaving piping
7 Pressure sensor
Note: Gives pump suction pressure information (see installation manual)
8 Temperature probe
Note: Gives heat exchanger leaving temperature information (see installation manual)
9 Temperature probe
Note: Gives heat exchanger entering temperature information (see installation manual)
10 Pressure sensor
Note: Gives unit leaving pressure information (see installation manual)
11 Check valve
Note: x 2 for a dual pump, not provided for a single pump
12 Plate heat exchanger
13 Water heat exchanger frost protection heater

Installation components

14 Temperature probe well
15 Air vent
16 Flexible connection
17 Shut-off valve
18 Screen filter (obligatory for a unit without hydronic module)
19 Pressure gauge
20 Water flow control valve
Note: Not necessary for a hydronic module with a variable-speed pump
21 Charge valve
22 Frost protection bypass valve (when shut-off valves [17] are closed during winter)

--- **Hydronic module (unit with hydronic module)**

Electrical data, units with hydronic modules

The pumps that are factory-installed in these units have motors with efficiency class IE2. The additional electrical data required by regulation 640/2009 is given in the installation, operation and maintenance manual.

This regulation concerns the application of directive 2005/32/EC on the eco-design requirements for electric motors.

Variable water flow system (VWF)

Variable water flow is a hydronic control function package that permits control of the water flow rate.

The VWF not only ensures control at full load, a specific Carrier algorithm linked to an electronic frequency converter also continuously modulates the flow rate to minimise pump consumption at full load as well as part load.

The hydronic module includes pressure transducers that permit intelligent measurement of the water flow rate and real-time display on the Touch Pilot Junior interface. All adjustments can be made directly on the interface, speeding up start-up and maintenance.

As VWF acts directly on the pump, the system no longer requires the control valve at the unit outlet. However, for applications with two-way valves a bypass system must be kept to guarantee the minimum flow rate.

Operating logic

■ Full-load set point
The flow rate control at full load uses the Touch Pilot Junior interface, reducing the pump speed. This first control saves energy that would normally be dissipated in the control valve. For example, if the pressure supplied by the pump is reduced by 20% the power consumption of the pump is reduced by the same ratio, compared to a traditional installation.

■ Operating mode at part load
Touch Pilot Junior includes two part-load operating modes:

- Constant outlet pressure control
- Constant delta T control.

1 – Constant unit outlet pressure control

The control continuously acts on the pump speed to ensure a constant outlet pressure.

This solution is suitable for installations with two-way valves. When these close, the water speed will accelerate in the system branches that are still open. For a fixed-speed pump this results in an unnecessary increase of the pressure at the pump outlet.

The outlet pressure control mode ensures that each circuit branch always has a uniform supply, without unnecessary energy waste.

In industrial processes such as plastic injection moulding, this solution ensures that each terminal unit has the correct pressure supply.

2 – Constant delta T control

The VWF algorithm maintains a constant delta T no matter what the unit load, reducing the flow rate to the minimum.

This solution can be used for systems with two-way or three-way valves and achieves higher energy savings than the “Constant unit outlet pressure control” mode. It is suitable for the majority of comfort applications.

Features and advantages

Quiet operation

- Compressors
  - Low-noise scroll compressors with low vibration level
  - The compressor assembly is installed on an independent chassis and supported by anti-vibration mountings
  - Dynamic suction and discharge piping support, minimising vibration transmission (Carrier patent).
- Air evaporator/condenser (30RQ) section
  - Vertical condenser coils
  - Low-noise latest-generation Flying Bird IV fans, made of a composite material (Carrier patent) are now even quieter and do not generate intrusive low-frequency noise
  - Rigid fan installation for reduced start-up noise (Carrier patent).

Easy and fast installation

- Integrated hydronic module (option)
  - Centrifugal low or high-pressure water pump (as required), based on the pressure loss of the hydronic installation
  - Single or dual water pump (as required) with operating time balancing and automatic changeover to the back-up pump if a fault develops
  - Water filter protects the pump against circulating debris
  - Pressure measurement, using two pressure transducers and allowing indication of water flow rate, water pressure and lack of water.
  - High-capacity membrane expansion tank ensures pressurisation of the water circuit
  - Overpressure valve, set to 4 bar
  - Speed variator on the pumps (option) to ensure the correct flow rate, based on the system requirements
  - Thermal insulation and frost protection down to -20°C, using an electric resistance heater (see table of options)

Hydronic module

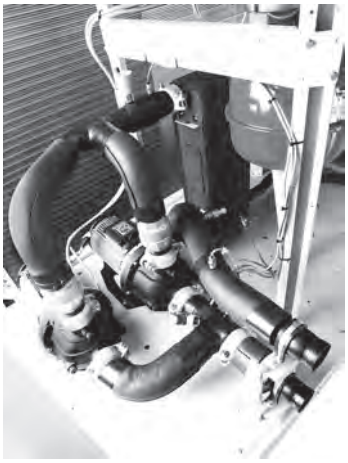

- Physical features
  - The unit has a small footprint and a low height (1330 mm) allowing it to blend in with any architectural styles.
  - The unit is enclosed by easily removable panels, covering all components (except air heat exchangers and fans).
- Simplified electrical connections
  - A single power supply point without neutral
  - Main disconnect switch (option 70) with high trip capacity
  - Transformer for safe 24 V control circuit supply included
- Fast commissioning
  - Systematic factory operation test before shipment
  - Quick-test function for step-by-step verification of the instruments, electrical components and motors.

Economical operation

- Optional variable-speed pump for economical operation
- The control algorithm adjusts the water flow rate based on the actual system requirements and obsoletes the need for the control valve at the unit outlet.

■ Increased energy efficiency at part load
- Eurovent energy efficiency class (in accordance with EN14511-3:2013) C and D in cooling mode and B and C in heating mode.
- The refrigerant circuit includes several compressors connected in parallel. At part load, around 99% of the operating time, only the compressors that are absolutely necessary operate. At these conditions the compressors operating are more energy efficient, as they use the total condenser and evaporator capacity.
- The electronic expansion device (EXV) allows operation at a lower condensing pressure (EER, COP and ESEER optimisation).
- Dynamic superheat management for better utilisation of the water heat exchanger surface.
- Defrost cycle optimisation (30RQ).

■ Reduced maintenance costs
- Maintenance-free scroll compressors
- Fast diagnosis of possible incidents and their history via the Touch Pilot Junior control
- R410A refrigerant is easier to use than other refrigerant blends.

Environmentally balanced

■ Non-ozone depleting R410A refrigerant
- Chlorine-free refrigerant of the HFC group with zero ozone depletion potential
- Very efficient - gives an increased energy efficiency ratio (EER, COP and ESEER)

■ Leak-tight refrigerant circuit
- Brazed refrigerant connections for increased leak-tightness
- Reduction of leaks due to reduced vibration levels and elimination of capillary tubes (TXVs)
- Verification of pressure transducers and temperature sensors without transferring refrigerant charge.

Partial view of the hydronic circuit

Superior reliability

■ State-of-the-art concept
- Cooperation with specialist laboratories and use of limit simulation tools (finite element calculations) for the design of the critical components, e.g. motor supports, suction/discharge piping etc.

■ Auto-adaptive control
- Control algorithm prevents excessive compressor cycling and permits reduction of the water quantity in the hydronic circuit (Carrier patent)
- Hydronic module with integrated pressure transducers allowing measurement of the water pressure at two points, as well as measurement of the water flow rate and detection of lack of water and pressure. This considerably reduces the risk of problems such as frost accumulation on the water heat exchanger.
- Automatic compressor unloading in case of abnormally high condensing pressure. If an anomaly occurs (e.g. fouled air heat exchanger coil, fan failure) AquaSnap continues to operate, but at reduced capacity.

■ Exceptional endurance tests
- Corrosion resistance tests in salt mist in the laboratory
- Accelerated ageing test on components that are submitted to continuous operation: compressor piping, fan supports
- Transport simulation test in the laboratory on a vibrating table.

Remote operating mode with volt-free contacts (standard)

A simple two-wire communication bus between the RS485 port of the AquaSnap and the Carrier Comfort Network offers multiple remote control, monitoring and diagnostic possibilities. Carrier offers a vast choice of control products, specially designed to control, manage and supervise the operation of an air conditioning system. Please consult your Carrier representative for more information on these products.

- Start/stop: Opening of this contact will shut down the unit
- Dual set point: Closing of this contact activates a second set point (example: unoccupied mode)
- Water pump 1 and 2 control (contacts supplied with the hydronic module option)*: These outputs control the contactors of one or two water heat exchanger water pumps
- Alarm indication: this volt-free contact indicates the presence of a major fault that has led to the shut-down of one or two refrigerant circuits
- Demand limit 1 and 2: Closing of these contacts limits the maximum unit capacity to three predefined values
- User safety: This contact can be used for any customer safety loop, closing of the contact generates a specific alarm
- Out of service: This signal indicates that the unit is completely out of service

Controls

Touch Pilot control

Touch Pilot Junior features a control with advanced communication technology over Ethernet (IP), user-friendly and intuitive user interface with 4.3” colour touch screen.

- Energy management
  - Monitoring of the cooling and pumping energy use on Touch Pilot Junior user interface with optional electricity meter
- Integrated advanced communication features
  - Easy and high-speed communication technology over Ethernet (IP) to a building management system
  - Access to multiple unit parameters.
- 4.3” Touch Pilot Junior user interface

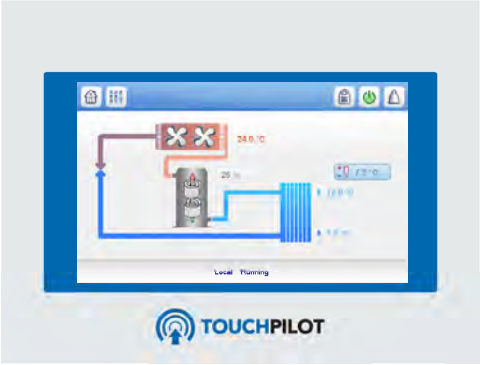

- Intuitive and user-friendly 4.3 inch touch screen interface
- Concise and clear information is available in local languages
- Complete menu, customised for different users (end user, service personnel or Carrier engineers).

Operating limits

Operating range, standard unit, cooling mode

30RQS		Minimum	Maximum
Evaporator			
Entering water temperature at start-up	°C	7.5	30
Leaving water temperature during operation	°C	5*	20
Entering/leaving water temperature difference	K	3	10
Condenser			
Entering air temperature**	°C	-10	48
Hydronic module* **			
Entering air temperature			
Kit without pump	°C	-20	-
Kit with pump (option 116x)	°C	0	-
Kit with pump (option 116x) and frost protection option to -20°C (option 42)	°C	-20	-

Note: Do not exceed the maximum operating temperature.

* If the leaving water temperature is below 5°C, a frost protection solution must be used.
** For transport and storage of the 30RQS units the minimum and maximum allowable temperatures are -20°C and +48°C. It is recommended that these temperatures are used for transport by container.
*** Defines the frost-free temperature of the hydronic components for use without glycol.

30RQS (cooling mode)

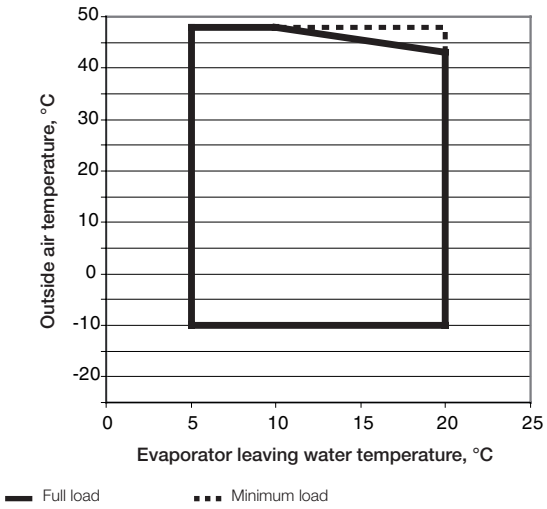

Operating range, standard unit, heating mode

30RQS		Minimum	Maximum
Condenser			
Entering water temperature at start-up	°C	8	45
Leaving water temperature during operation	°C	25	55
Entering/leaving water temperature difference	K	3	10
Evaporator			
Air temperature	°C	-15	40
Hydronic module*			
Entering air temperature			
Kit without pump	°C	-20	-
Kit with pump (option 116x)	°C	0	-
Kit with pump (option 116x) and frost protection option to -20°C (option 42)	°C	-20	-

Note: Do not exceed the maximum operating temperature.

* Defines the frost-free temperature of the hydronic components for use without glycol.

30RQS (heating mode)

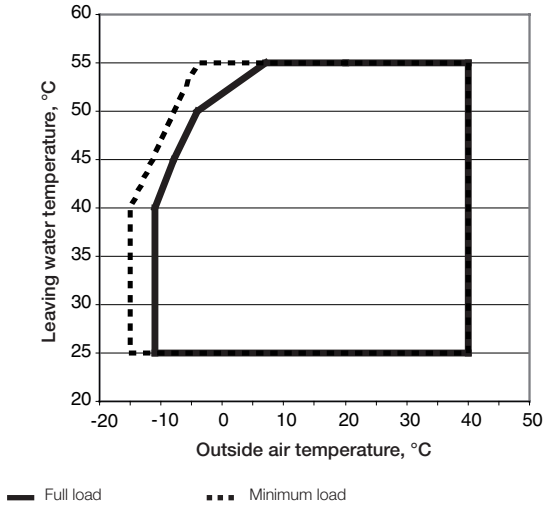

Available external static pressure

Data applicable for:

- Fresh water 20 °C
- In case of use of glycol, the maximum water flow is reduced.

Low-pressure pump

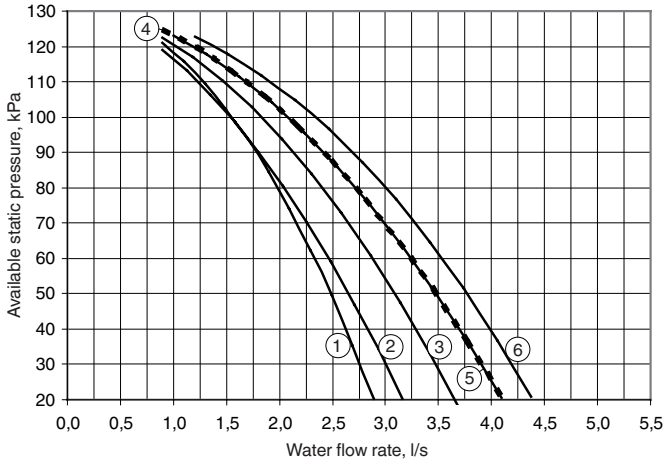

Legend

1. 30RQS 039
2. 30RQS 045
3. 30RQS 050
4. 30RQS 060
5. 30RQS 070
6. 30RQS 078

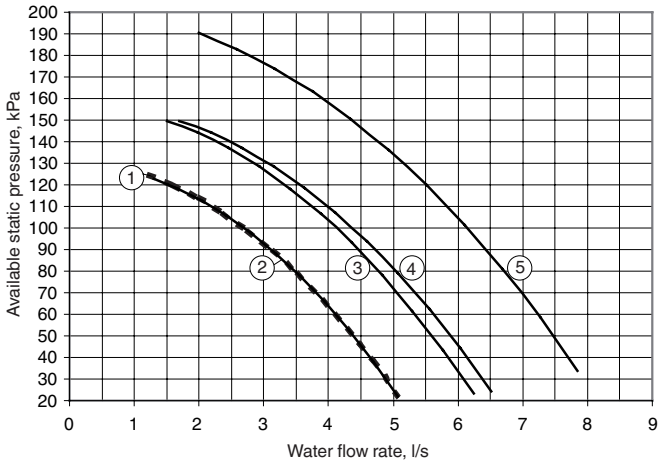

Legend

1. 30RQS 080
2. 30RQS 090
3. 30RQS 100
4. 30RQS 120
5. 30RQS 140

High-pressure pump

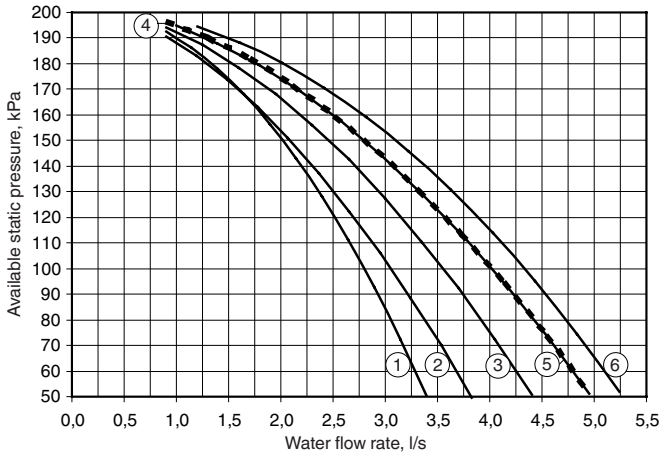

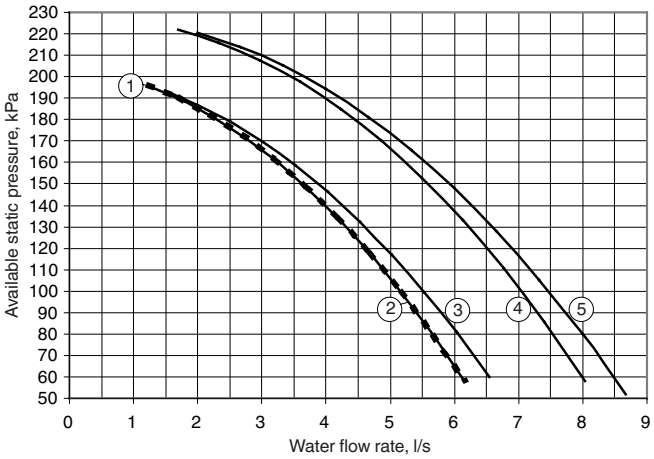

Legend

1. 30RQS 039
2. 30RQS 045
3. 30RQS 050
4. 30RQS 060
5. 30RQS 070
6. 30RQS 078

Legend

1. 30RQS 080
2. 30RQS 090
3. 30RQS 100
4. 30RQS 120
5. 30RQS 140

Dimensions/clearances

30RQS 039-078, units with and without hydronic module

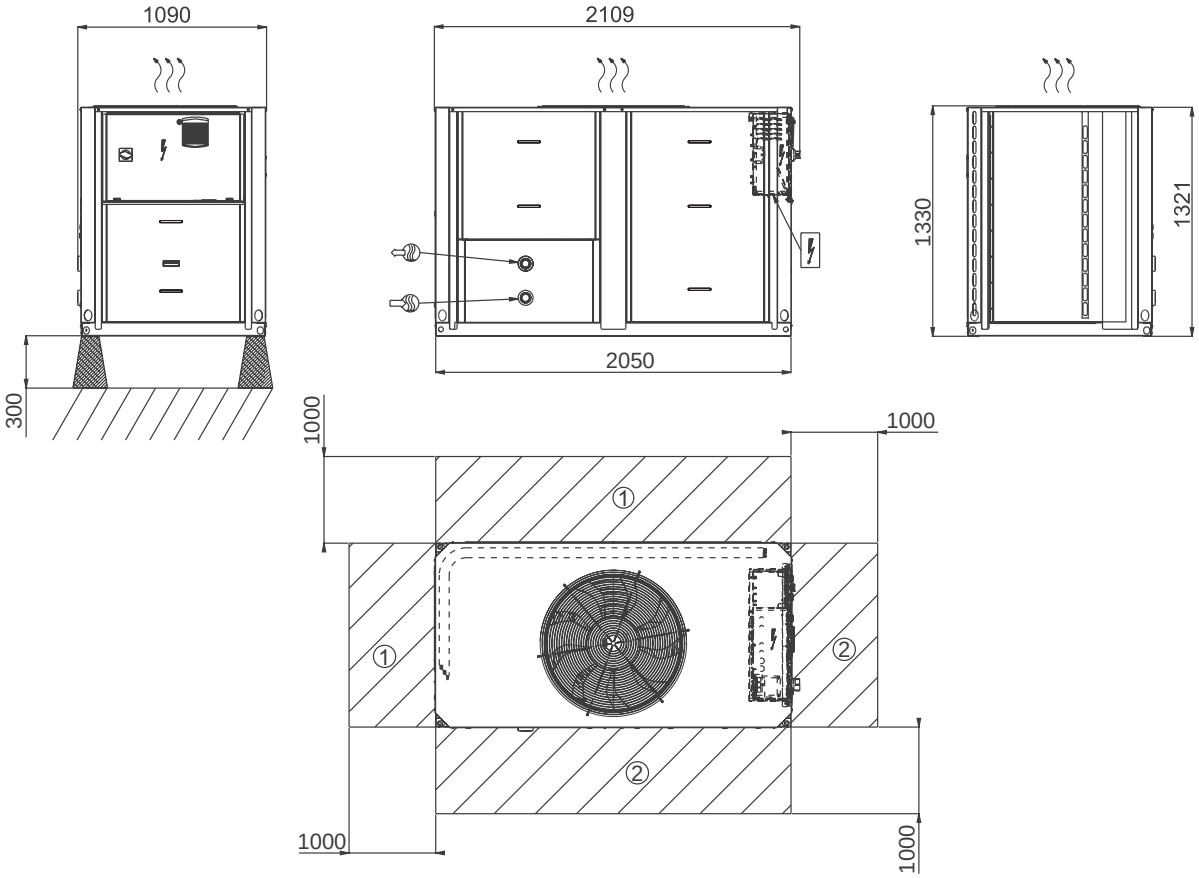

30RQS 080-160, units with and without hydronic module

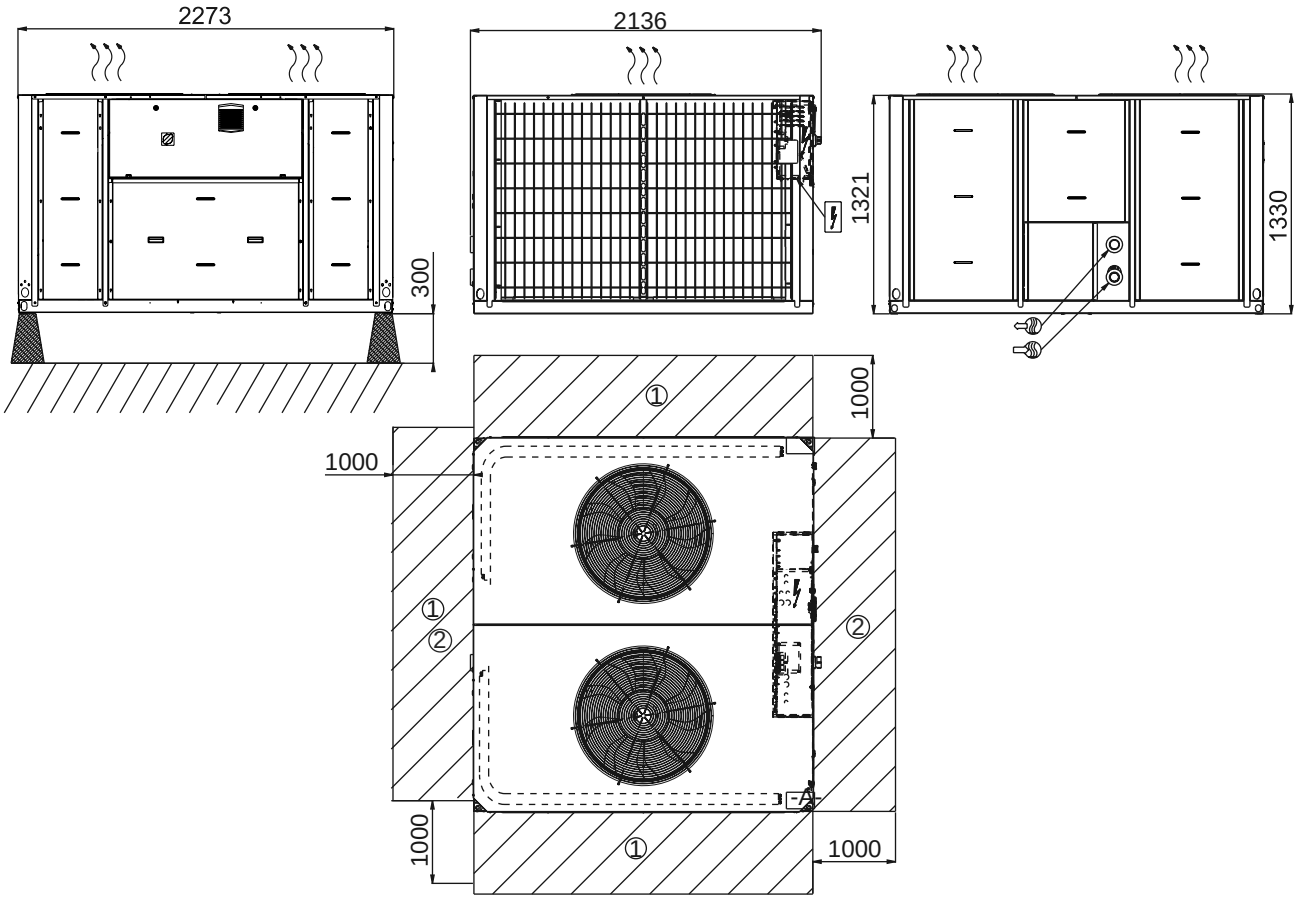

Legend:
All dimensions are given in mm

- Control box
- Water inlet
- Water outlet
- ① Required clearances for air entry
- ② Recommended space for maintenance
- Air outlet, do not obstruct
- Power supply inlet

Notes:

A Non-certified drawings.
Refer to the certified dimensional drawings supplied with the unit or available on request, when designing an installation.

For the location of fixing points, weight distribution and coordinates of the centre of gravity refer to the certified dimensional drawings.

B In multiple-chiller installations (maximum four units), the side clearance between the units should be increased from 1000 to 2000 mm.

C The height of the solid surface must not exceed 2 m.

Dimensions/clearances for 30RQS units with option 49

Position of the desuperheater inlets and outlets

30RQS 039-080

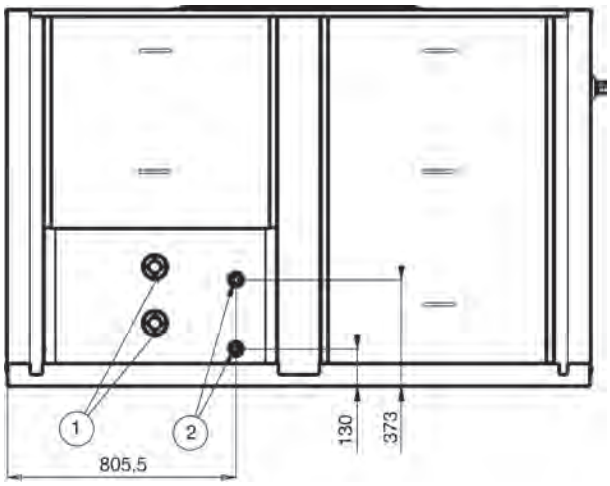

30RQS 090-120

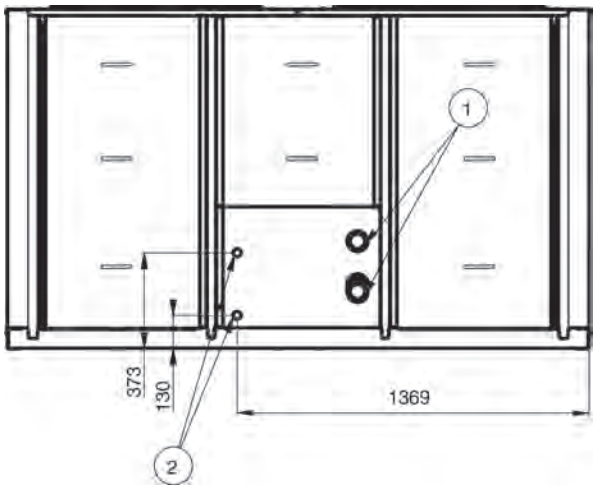

30RQS 140-160

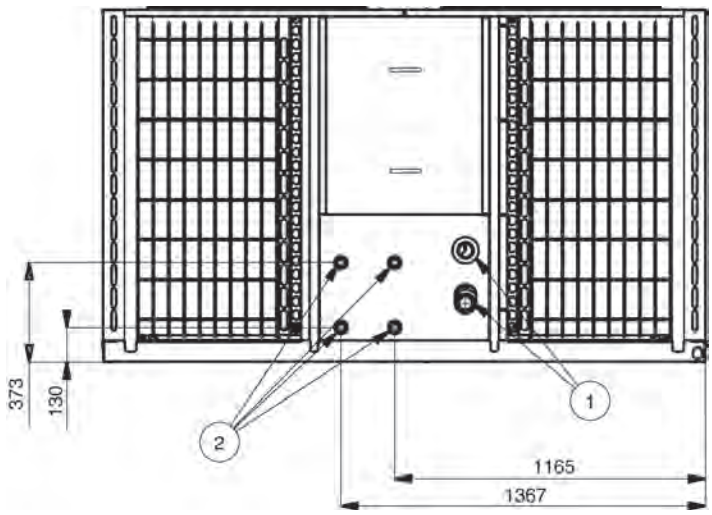

(1) Unit water inlet and outlet

(2) Water inlet and outlet, unit with option 49

30RQSY

Nominal heating capacity 42-159 kW
Nominal cooling capacity 37-147 kW

HEATING

AQUASNAP Reversible

Compact design

High static available pressure

Quiet operation

Variable speed fans

Variable water flow (optional)

The AquaSnap liquid chiller/heat pump range was designed for commercial (air conditioning of offices, hotels etc.) or industrial (low-temperature process units etc.) applications.

It integrates the latest technological innovations:

- Non-ozone depleting R410A refrigerant
- Scroll compressors
- Low-noise fans made of a composite material
- Auto-adaptive microprocessor control
- Electronic expansion valve
- Variable-speed pump (option)

The AquaSnap can be equipped with a hydronic module integrated into the unit chassis, limiting the installation to straightforward operations like connection of the power supply and the chilled water supply and return piping.

Physical data

EUROVENT CERTIFIED PERFORMANCE
www.eurovent-certification.com

30RQSY				039	045	050	060	070	078	080	090	100	120	140	160
Cooling															
Full load performances*	C1	Nominal capacity	kW	37.2	43.5	49.8	57.6	62.6	72.6	77.7	85.6	95.9	113.2	129.6	147.1
	C1	EER	kW/kW	2.85	2.76	2.7	2.76	2.7	2.55	2.78	2.71	2.7	2.71	2.74	2.54
	C1	Eurovent Energy Class		A	A	A	A	A	B	A	A	A	A	A	B
	C2	Nominal capacity	kW	46.5	54.4	63.2	70.1	77.5	91.5	97.4	107.9	117.7	143.2	160.3	183.6
	C2	EER	kW/kW	3.29	3.23	3.14	3.11	3.07	2.9.3	3.18	3.15	3.11	3.12	3.13	2.88
Seasonal Efficiency*		ESEER	kW/kW	3.84	3.9	3.85	3.77	3.73	3.66	3.73	3.65	3.77	4	3.82	3.75
Heating															
Full load performances*	H1	Nominal capacity	kW	42.7	46.9	54.6	63.2	71.7	80.1	82.5	94.9	103	120.7	141.9	163
	H1	COP	kW/kW	3.68	3.69	3.69	3.8	3.7	3.63	3.77	3.73	3.65	3.64	3.74	3.57
	H1	Eurovent Energy Class		C	C	C	B	C	D	B	C	D	C	C	D
	H2	Nominal capacity	kW	41.8	46.7	53.4	61.7	70	78	79.6	92.8	100.9	116.9	138.6	158.8
	H2	COP	kW/kW	3.06	3.04	3	3.07	3.09	3	3.11	3.04	3	3	3.07	2.95
	H2	Eurovent Energy Class		A	A	A	A	A	A	A	A	A	A	A	B
Seasonal Efficiency**	H1	Energy Class		A	A	A	A	A+	A	A	-	-	-	-	-
	H1	SCOP	kW/kW	2.98	3.01	2.98	3.1	3.12	3.07	3.05	3	2.99	3.05	3.17	3.12
	H1	η_s heat	%	116	117	116	121	122	120	119	117	117	119	124	122
		Prated	KW	33	37	42	51	58	65	66	77	84	96	114	132
Sound Power Level Standard Unit (Radiated) ESP = 80 Pa			dB(A)	84	84	84	87	87	87	87	87	87	87	90	90
Operating weight†**															
Standard unit without hydronic module			kg	507	514	548	562	562	569	748	916	925	983	1078	1095
Standard unit with hydronic module															
Single high-pressure pump			kg	522	529	563	577	577	584	735	904	913	975	1074	1090
Dual high-pressure pump			kg	548	555	589	602	603	610	761	949	958	1024	1111	1128
Compressor				Hermetic scroll compressors. 48.3 r/s											
Circuit A/B				2/-	2/-	2/-	2/-	2/-	2/-	2/-	3/-	3/-	3/-	2/2	2/2
Refrigerant				R-410A											
Capacity control				Touch Pilot Junior											
Air heat exchangers				Grooved copper tubes and aluminium fins											
Fans				Axial Flying Bird IV with rotating shroud											
Quantity				1	1	1	1	1	1	2	2	2	2	2	2
Total air flow (at high speed)			l/s	3692	3690	3910	5278	4982	5267	7770	7380	7376	7818	9964	10534
Water heat exchanger				Direct expansion, plate heat exchanger											
Hydronic module (option)				Single or dual pump, Victaulic screen filter, safety valve, expansion tank, purge valves (water and air), pressure sensors											
Dimensions††															
Length			mm	2100		2150				2275					
Depth			mm	1140		1140				2125					
Height			mm	1380		1380				1380					

C1 Cooling mode conditions: Water heat exchanger, entering/leaving temperature 12°C/7°C, fouling factor 0 m^2 K/W. Outside air temperature 35°C
C2 Cooling mode conditions::Water heat exchanger, entering/leaving temperature 23°C/18°C, fouling factor 0 m^2 K/W. Outside air temperature 35°C
H1 Heating mode conditions: Water heat exchanger water entering/leaving temperature 30°C/35°C, fouling factor 0 m^2 K/W. Outside air temperature 7°C db/6°C wb,
H2 Heating mode conditions: Water heat exchanger water entering/leaving temperature 40°C/45°C, fouling factor 0 m^2 K/W. Outside air temperature 7°C db/6°C wb,
* In accordance with standard EN14511-3:2013
** In accordance with standard EN14825:2013, average climate
† Weight shown is a guideline only.
†† The value is for units without filter frame.

Eurovent certified data Eurovent certified data

Electrical data

30RQSY without hydronic module		039	045	050	060	070	078	080	090	100	120	140	160
Power circuit													
Nominal power supply	V-ph-Hz	400-3-50 ± 10%											
Control circuit supply		24 V via internal transformer											
Maximum start-up current (Un)*													
Standard unit	A	116.40	137.40	145.40	148.40	176.40	213.40	218.80	178.80	212.80	252.80	243.80	286.80
Unit with electronic starter option	A	74.70	86.50	93.80	96.20	114.40	143.30	148.80	-	-	-	-	-
Maximum operating power input**	kW	21.20	24.00	26.20	29.60	31.80	36.40	39.00	45.70	49.00	55.90	63.60	72.80
Nominal unit operating current draw***	A	28.20	31.60	35.60	38.60	42.80	53.20	58.60	60.60	66.90	82.50	85.60	106.40

* Maximum instantaneous start-up current at operating limit values (maximum operating current of the smallest compressor(s) + fan current + locked rotor current of the largest compressor).

** Power input, compressors and fans, at the unit operating limits (saturated suction temp. 10°C, saturated condensing temp. 65°C) and nominal voltage of 400 V (data given on the unit nameplate).

*** Standardised Eurovent conditions: evaporator entering/leaving water temperature 12°C/7°C, outside air temperature 35°C.

Options

Options	No.	Description	Advantages	Use 30RQSY
Air heat exchanger with pre-treated fins	3A	Fins made of pre-treated aluminium (polyurethane and epoxy)	Improved corrosion resistance, recommended for marine environments	30RQS/RQSY 039-160*
Low temperature glycol solution	5B	Low temperature chilled water production down to 0°C with ethylene glycol and propylene glycol. Note: With option 5B the units are equipped with traditional coils (Cu/Al).	Covers specific applications down to 0 °C	30RQS 039-160
Low temperature glycol solution	6B	Low temperature chilled water production down to -15°C with ethylene glycol and -12°C with propylene glycol. Note: With option 6B the units are equipped with traditional coils (Cu/Al).	Covers specific applications such as ice storage and industrial processes	30RQS 039-160
Very low noise level	15LS	Acoustic compressor enclosure and low-speed fans	Noise emission reduction at reduced fan speed	30RQS/RQSY 039-160
Suction filter	23B	Washable G2 efficiency filter in accordance with EN 779	Prevents pollution of the air heat exchanger	30RQSY 039-078
Winter operation**	28	Fan speed control via frequency converter	Stable unit operation when the air temperature is between -10°C and -20°C.	30RQS 039-160
Soft starter	25	Electronic compressor starter	Reduced compressor start-up current	30RQS/RQSY 039-160
Frost protection down to -20°C	42	Electric heater on the hydronic module	Hydronic module frost protection at low outside temperatures	30RQS/RQSY 039-160
Partial heat reclaim	49	Partial heat reclaim by desuperheating of the compressor discharge gas.	Free high-temperature hot-water production simultaneously with chilled and hot-water production	30RQS/RQSY 039-160
Master/slave operation	58	Unit equipped with an additional field-installed leaving water temperature sensor, allowing master/slave operation of two units connected in parallel	Operation of two units connected in parallel with operating time equalisation	30RQS/RQSY 039-160
Main disconnect switch without fuse	70	Factory-installed main electric disconnect switch in the control box	Ease-of-installation and compliance with local electrical regulations	30RQS/RQSY 039-160
HP single-pump hydronic module	116B	Single high-pressure water pump, water filter, expansion tank, temperature and pressure sensors. See hydronic module option.	Easy and fast installation	30RQS/RQSY 039-160
HP dual-pump hydronic module	116C	Dual high-pressure water pump, water filter, expansion tank, temperature and pressure sensors. See hydronic module option.	Easy and fast installation, operating safety	30RQS/RQSY 039-160
LP single-pump hydronic module	116F	Single low-pressure water pump, water filter, expansion tank, temperature and pressure sensors. See hydronic module option.	Easy and fast installation	30RQS/RQSY 039-160

Options	No.	Description	Advantages	Use 30RQSY
LP dual-pump hydronic module	116G	Dual low-pressure water pump, water filter, expansion tank, temperature and pressure sensors. See hydronic module option.	Easy and fast installation, operating safety	30RQS/RQSY 039-160
HP variable-speed single-pump hydronic module	116J	Single high-pressure water pump, water filter, expansion tank, temperature and pressure sensors. See hydronic module option.	Easy and fast installation, reduced power consumption of the water circulation pump	30RQS/RQSY 039-160
HP variable-speed dual-pump hydronic module	116K	Dual high-pressure water pump, water filter, expansion tank, temperature and pressure sensors. See hydronic module option.	Easy and fast installation, operating safety, reduced power consumption of the water circulation pump	30RQS/RQSY 039-160
HP single-pump hydronic module without expansion tank	116R	Single high-pressure water pump, water filter, temperature and pressure sensors. See hydronic module option.	Easy and fast installation	30RQS/RQSY 039-160
HP dual-pump hydronic module without expansion tank	116S	Dual high-pressure water pump, water filter, temperature and pressure sensors. See hydronic module option.	Easy and fast installation, operating safety	30RQS/RQSY 039-160
LP single-pump hydronic module	116T	Single low-pressure water pump, water filter, temperature and pressure sensors. See hydronic module option.	Easy and fast installation	30RQS/RQSY 039-160
LP dual-pump hydronic module	116U	Dual low-pressure water pump, water filter, temperature and pressure sensors. See hydronic module option.	Easy and fast installation, operating safety	30RQS/RQSY 039-160
HP variable-speed single-pump hydronic module	116V	Single high-pressure water pump, water filter, temperature and pressure sensors. See hydronic module option.	Easy and fast installation, reduced power consumption of the water circulation pump	30RQS/RQSY 039-160
HP variable-speed dual-pump hydronic module	116W	Dual high-pressure water pump, water filter, temperature and pressure sensors. See hydronic module option.	Easy and fast installation, operating safety, reduced power consumption of the water circulation pump	30RQS/RQSY 039-160
JBus gateway	148B	Two-directional communications board, complies with JBus protocol	Easy connection by communication bus to a building management system	30RQS/RQSY 039-160
Bacnet gateway	148C	Two-directional communications board, complies with Bacnet protocol	Easy connection by communication bus to a building management system	30RQS/RQSY 039-160
LonTalk gateway	148D	Two-directional communications board, complies with Lon Talk protocol	Easy connection by communication bus to a building management system	30RQS/RQSY 039-160
Water heat exchanger screw connection sleeves	264	Inlet/outlet screw connection sleeves	Permit connection of the unit to a screw connection	30RQS/RQSY 039-160
Welded evaporator water connection kit	266	Victaulic piping connections with welded joints	Permit connection of the unit to a connection other than a Victaulic connection	30RQS/RQSY 039-160
Reinforced ECM filtration for fan VFD***	282A	Fan variable frequency drive compliance to IEC 61800-3 C1 class	Allows unit installation in domestic residential environment by reducing electromagnetic interferences	30RBSY/RQSY 039-160
Reinforced ECM filtration for pump VFD****	282B	Pump variable frequency drive compliance to IEC 61800-3 C1 class	Allows unit installation in domestic residential environment by reducing electromagnetic interferences	30RBSY/RQSY 039-160

* 30RQS/RQSY 039-160 with option 49 or 30RQS 0039-160 with option 6B.
** Winter operation option: This option allows operation of the unit down to -20°C outside air temperature due to the optimised control of the condensing temperature. One fan is equipped with a frequency converter.
*** 30RQSY 039-160 with option 5B or 6B or 28
**** 30RQSY 039-160 with option 116 J or K or V or W

Partial heat reclaim using desuperheaters (option 49)

This option permits the production of free hot water using heat reclaim by desuperheating the compressor discharge gases. The option is available for the whole RQSY range, that are equipped with traditional Cu/Al coils.

A plate heat exchanger is installed in series with the air condenser coils on the compressor discharge line of each circuit.

Hydronic module (option 116)

This module is equipped with pressure transducers to optimise unit operation at the hydronic level.

The hydronic module option reduces the installation time. The unit is factory-equipped with the main hydronic components required for the system: Screen filter, water pump, expansion tank, safety valve and water pressure transducers.

The pressure transducers allow the Touch Pilot Junior control to:

- Display the available pressure at the unit outlet and the static system pressure
- Calculate the instantaneous flow rate, using an algorithm that integrates the unit characteristics
- Integrate the system and water pump protection devices (lack of water, water pressure, water flow rate etc.)

Several water pump types are available: Primary single or dual low-pressure pump or single or dual high-pressure pump.

An automatic pump start-up algorithm protects the heat exchanger and the hydronic module piping against frost down to 0°C(30RQSY) outside temperature, if the water heat exchanger frost protection option is installed. If necessary increased frost protection down to -20°C is possible by adding heaters to the hydronic module piping (see option 42).

The hydronic module option is integrated into the unit without increasing its dimensions and saves the space normally used for the water pump.

Typical hydronic circuit diagram

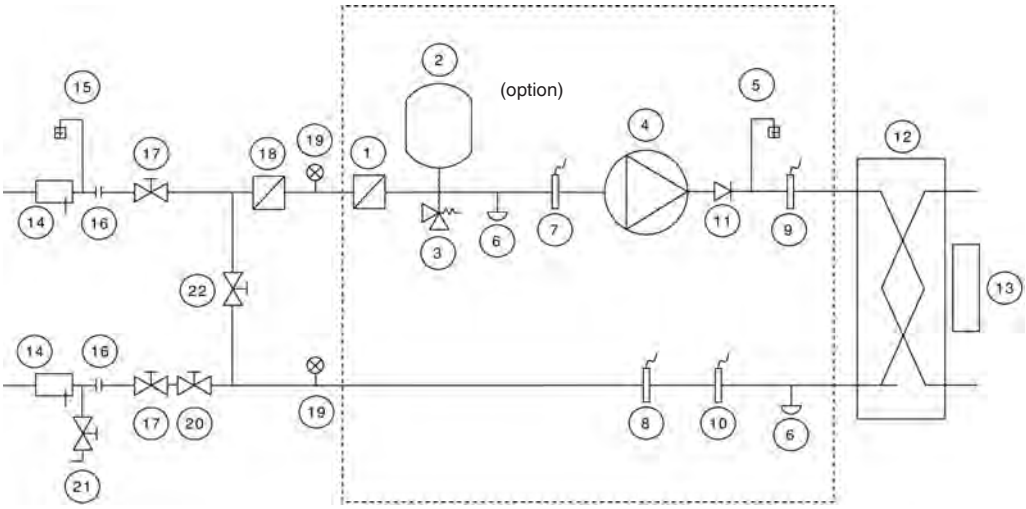

Legend

Components of the unit and hydronic module

1 Victaulic screen filter
2 Expansion tank (option)
3 Safety valve
4 Available pressure pump
Note: x 1 for a single pump, x 2 for a dual pump
5 Air purge
6 Water drain valve
Note: A second valve is located on the heat exchanger leaving piping
7 Pressure sensor
Note: Gives pump suction pressure information (see installation manual)
8 Temperature sensor
Note: Gives heat exchanger leaving temperature information (see installation manual)
9 Temperature sensor
Note: Gives heat exchanger entering temperature information (see installation manual)
10 Pressure sensor
Note: Gives unit leaving pressure information (see installation manual)
11 Check valve
Note: x 2 for a dual pump, not provided for a single pump
12 Plate heat exchanger
13 Water heat exchanger frost protection heater

Installation components

14 Temperature probe well
15 Air vent
16 Flexible connection
17 Shut-off valve
18 Screen filter (obligatory for a unit without hydronic module)
19 Pressure gauge
20 Water flow control valve
Note: Not necessary for a hydronic module with a variable-speed pump
21 Charge valve
22 Frost protection bypass valve (when shut-off valves [17] are closed during winter)

Notes:

- Units without hydronic module are equipped with a flow switch and two temperature sensors (8 and 9).
- The pressure sensors are installed on connections without Schrader valve.
- Depressurise and empty the system before any intervention.

Electrical data, units with hydronic modules

The pumps that are factory-installed in these units have motors with efficiency class IE2. The additional electrical data required by regulation 640/2009 is given in the installation, operation and maintenance manual.

This regulation concerns the application of directive 2005/32/EC on the eco-design requirements for electric motors.

Variable water flow system (VWF)

Variable water flow is a hydronic control function package that permits control of the water flow rate.

The VWF not only ensures control at full load, a specific Carrier algorithm linked to an electronic frequency converter also continuously modulates the flow rate to minimise pump consumption at full load as well as part load.

The hydronic module includes pressure transducers that permit intelligent measurement of the water flow rate and real-time display on the Touch Pilot Junior interface. All adjustments can be made directly on the interface, speeding up start-up and maintenance.

As VWF acts directly on the pump, the system no longer requires the control valve at the unit outlet. However, for applications with two-way valves a bypass system must be kept to guarantee the minimum flow rate.

Operating logic

- **Full-load set point**
  The flow rate control at full load uses the Touch Pilot Junior interface, reducing the pump speed. This first control saves energy that would normally be dissipated in the control valve. For example, if the pressure supplied by the pump is reduced by 20% the power consumption of the pump is reduced by the same ratio, compared to a traditional installation.
- Operating mode at part load
  Touch Pilot Junior includes two part-load operating modes:
  - Constant outlet pressure control
  - Constant delta T control.

1 – Constant unit outlet pressure control

The control continuously acts on the pump speed to ensure a constant outlet pressure.

This solution is suitable for installations with two-way valves. When these close, the water speed will accelerate in the system branches that are still open. For a fixed-speed pump this results in an unnecessary increase of the pressure at the pump outlet.

The outlet pressure control mode ensures that each circuit branch always has a uniform supply, without unnecessary energy waste.

In industrial processes such as plastic injection moulding, this solution ensures that each terminal unit has the correct pressure supply.

2 – Constant delta T control

The VWF algorithm maintains a constant delta T no matter what the unit load, reducing the flow rate to the minimum.

This solution can be used for systems with two-way or three-way valves and achieves higher energy savings than the "Constant unit outlet pressure control" mode. It is suitable for the majority of comfort applications.

Features and advantages

Quiet operation

- Compressors
  - Low-noise scroll compressors with low vibration level
  - The compressor assembly is installed on an independent chassis and supported by anti-vibration mountings
  - Dynamic suction and discharge piping support, minimising vibration transmission (Carrier patent)
- Condenser (30RQSY)/air evaporator
  - Vertical condenser coils
  - Protection grilles on anti-vibration mountings to protect the heat exchanger against possible shocks (30RQSY 080-160 only).
  - Low-noise latest-generation Flying Bird IV fans, made of a composite material (Carrier patent) are now even quieter and do not generate intrusive low-frequency noise
  - Fan motor controlled by a variable-frequency controller, to allow adjustment of the fan speed in accordance with the ducting for optimised efficiency.
  - Rigid fan installation for reduced start-up noise (Carrier patent)

Easy and fast installation

- Physical features
  - Flying Bird IV fans controlled by a variable-frequency controller to provide up to 240 Pa available pressure (depending on the size) at nominal flow rate
  - Flow control in accordance with the ducting for optimised efficiency with the possibility to program a maximum supply air flow.
  - Supply air duct connection frame.
  - Suction air connection frame standard for sizes 30RQSY 039-078
  - Suction air filters optional (30RQSY 039-078 only)
  - Small unit footprint with a low height (1371 mm) for easy installation in most buildings
  - The unit is enclosed by easily removable panels, covering all components (except air heat exchanger and fans).
- Integrated hydronic module (option)
  - Centrifugal low or high-pressure water pump (as required), based on the pressure loss of the hydronic installation.

Hydronic module

- Single or dual water pump (as required) with operating time balancing and automatic changeover to the back-up pump if a fault develops
- Water filter protects the water pump against circulating debris
- Pressure measurement, using two pressure transducers and allowing indication of water flow rate, water pressure and lack of water.
- High-capacity membrane expansion tank ensures pressurisation of the water circuit
- Overpressure valve, set to 4 bar
- Speed variator on the pumps (option) to ensure the correct flow rate, based on the system requirements
- Thermal insulation and frost protection down to -20°C, using an electric resistance heater (see table of options)

■ Simplified electrical connections
- A single power supply point without neutral
- Main disconnect switch (option 70) with high trip capacity
- Transformer for safe 24 V control circuit supply included

■ Fast commissioning
- Systematic factory operation test before shipment
- Quick-test function for step-by-step verification of the instruments, electrical components and motors

Economical operation

■ Variable-speed pump (option)
- The control algorithm adjusts the water flow rate in accordance with the actual system requirements. This saves energy and makes the flow control valve unnecessary.

■ Variable-speed fan
- Variable-speed ventilation permits adjustment to any duct type and variation of the air flow rate for maximised unit EERs and COPs under any operating conditions.

■ Increased energy efficiency at part load
- Eurovent energy efficiency class A and B in cooling mode and A in heating mode (in accordance with EN14511-3:2013)
- The refrigerant circuit includes several compressors connected in parallel. At part load, around 99% of the operating time, only the compressors that are absolutely necessary operate. At these conditions the compressors operating are more energy efficient, as they use the total condenser and evaporator capacity.
- The electronic expansion device (EXV) allows operation at a lower condensing pressure (EER, COP and ESEER optimisation).
- Dynamic superheat management for better utilisation of the water heat exchanger surface.
- Defrost cycle optimisation (30RQSY)

■ Reduced maintenance costs
- Maintenance-free scroll compressors
- Fast diagnosis of possible incidents and their history via the Touch Pilot Junior control
- R410A refrigerant is easier to use than other refrigerant blends

Environmentally balanced

■ Non-ozone depleting R410A refrigerant
- Chlorine-free refrigerant of the HFC group with zero ozone depletion potential
- Very efficient - gives an increased energy efficiency ratio (EER, COP and ESEER)

■ Leak-tight refrigerant circuit
- Brazed refrigerant connections for increased leak-tightness
- Reduction of leaks due to reduced vibration levels and elimination of capillary tubes (TXVs)
- Verification of pressure transducers and temperature sensors without transferring refrigerant charge

Supply air connection frame

Superior reliability

■ State-of-the-art concept
- Cooperation with specialist laboratories and use of limit simulation tools (finite element calculations) for the design of the critical components, e.g. motor supports, suction/discharge piping etc.

■ Auto-adaptive control
- Control algorithm prevents excessive compressor cycling and permits reduction of the water quantity in the hydronic circuit (Carrier patent)
- Hydronic module with integrated pressure transducers allowing measurement of the water pressure at two points, as well as measurement of the water flow rate and detection of lack of water and pressure. This considerably reduces the risk of problems such as frost accumulation on the water heat exchanger.
- Automatic compressor unloading in case of abnormally high condensing pressure. If an anomaly occurs (e.g. fouled air heat exchanger coil, fan failure) AquaSnap continues to operate, but at reduced capacity.

- Exceptional endurance tests
  - Corrosion resistance tests in salt mist in the laboratory
  - Accelerated ageing test on components that are submitted to continuous operation: compressor piping, fan supports
  - Transport simulation test in the laboratory on a vibrating table.

Controls

Touch Pilot Junior control

The Touch Pilot features a control with advanced communication technology over Ethernet (IP), user-friendly and intuitive user interface with 4.3" colour touch screen.

- Energy management
  - Monitoring of the cooling and pumping energy use on Touch Pilot Junior user interface with optional electricity meter
- Integrated advanced communication features
  - Easy and high-speed communication technology over Ethernet (IP) to a building management system
  - Access to multiple unit parameters.
- 4.3" Touch Pilot user interface

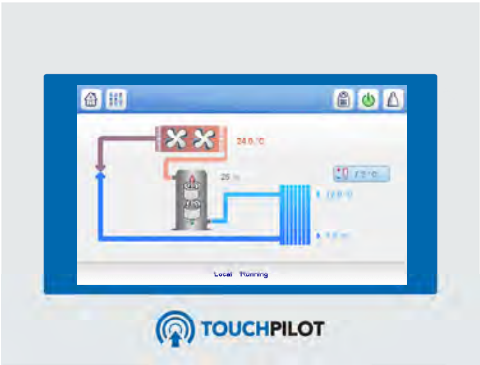

  - Intuitive and user-friendly 4.3 inch touch screen interface
  - Concise and clear information is available in local languages
  - Complete menu, customised for different users (end user, service personnel or Carrier engineers).

Carrier Comfort Network (CCN) operating mode

A simple two-wire communication bus between the RS485 port of the AquaSnap and the Carrier Comfort Network offers multiple remote control, monitoring and diagnostic possibilities. Carrier offers a vast choice of control products, specially designed to control, manage and supervise the operation of an air conditioning system. Please consult your Carrier representative for more information on these products.

Remote operating mode with dry contacts (standard)

- Start/stop: Opening of this contact will shut down the unit
- Dual set point: Closing of this contact activates a second set point (example: unoccupied mode)
- Water pump 1 and 2 control (contacts supplied with the hydronic module option)*: These outputs control the contactors of one or two water heat exchanger water pumps
- Alarm indication: this volt-free contact indicates the presence of a major fault that has led to the shut-down of one or two refrigerant circuits
- Demand limit 1 and 2: Losing of these contacts limits the maximum unit capacity to three predefined values
- User safety: This contact can be used for any customer safety loop, closing of the contact generates a specific alarm.

Operating limits

Water heat exchanger water flow rate

30RQSY	Flow rate, l/s			
	Minimum	Maximum*	Maximum dual pump**	
			Low pressure***	High pressure***
039	0.9	3.0	2.9	3.4
045	0.9	3.4	3.2	3.8
050	0.9	4.2	3.7	4.4
060	0.9	5.0	4.1	5.0
070	1.0	5.0	4.1	5.0
078	1.2	5.5	4.4	5.2
080	1.2	6.8	5.1	6.2
090	1.3	6.8	5.1	6.2
100	1.5	7.7	6.3	6.5
120	1.7	8.5	6.5	8.0
140	2.0	10.6	7.9	8.7
160	2.3	11.2	8.2	8.9

* Maximum flow rate at a pressure drop of 100 kPa in the plate heat exchanger (unit without hydronic module).
** Maximum flow rate at an available pressure of 20 kPa (unit with low-pressure hydronic module) or 50 kPa (high-pressure module).
*** Maximum flow rate with single pump is 2 to 4% higher, depending on the size.

Operating range, standard unit, cooling mode

30RQSY		Min	Max
Evaporator			
Entering water temperature at start-up	°C	7.5*	30
Leaving water temperature during operation	°C	5**	20
Entering/leaving water temperature difference	K	3	10
Condenser			
Entering air temperature***	°C	-20	46

Note: Do not exceed the maximum operating temperature.

* For entering water temperatures below 7.5°C at start-up, contact Carrier.
** For low-temperature applications, where the leaving water temperature is below 5°C, a frost protection solution must be used.
*** For transport and storage of the 30RQSY units the minimum and maximum allowable temperatures are -20°C and +48°C. It is recommended that these temperatures are used for transport by container.

Operating range, standard unit, heating mode

30RQSY		Min	Max
Condenser			
Entering water temperature at start-up	°C	8	45
Leaving water temperature during operation	°C	25	55
Entering/leaving water temperature difference	K	3	10
Evaporator			
Air temperature	°C	-15	40

Note: Do not exceed the maximum operating temperature.

30RQSY (cooling mode)

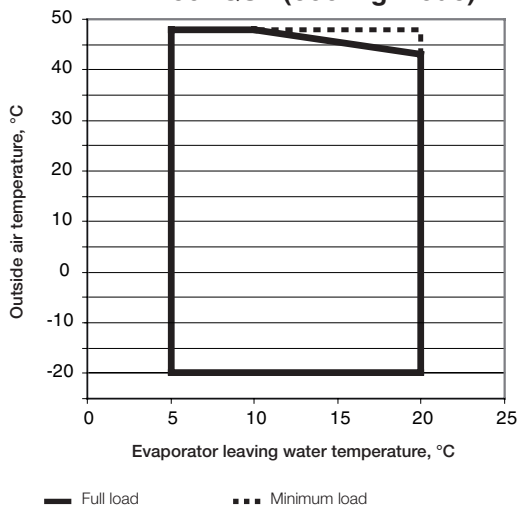

Note: This operating range applies up top 130 Pa static pressure without suction air duct for sizes 060, 070 and 078 and 140-160, and up to 240 Pa for all other sizes.

30RQSY (heating mode)

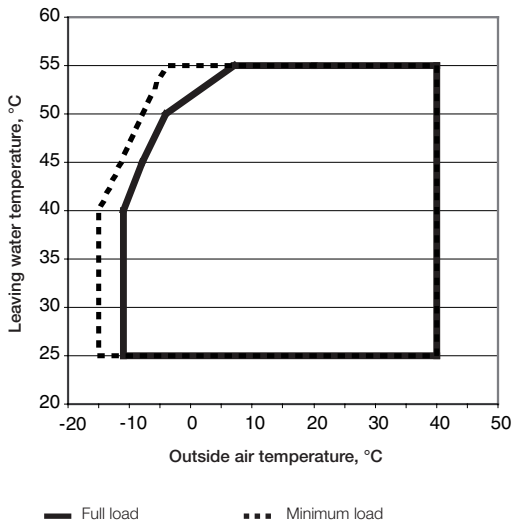

HEATING

Available external static pressure

Data applicable for:

- Fresh water 20 °C
- In case of use of the glycol, the maximum water flow is reduced.

Low-pressure pump

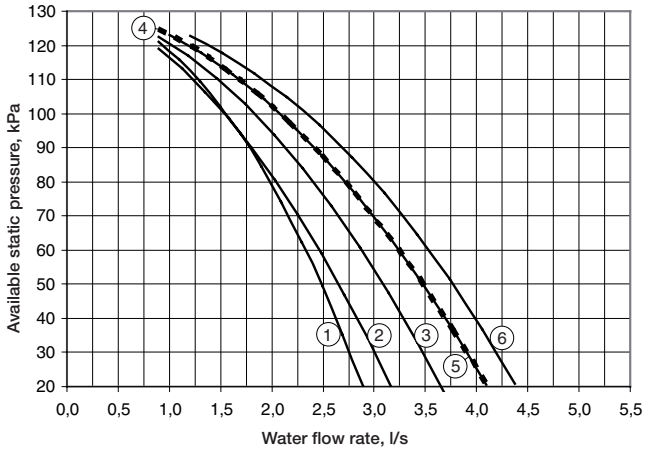

Legend

1. 30RQSY 039
2. 30RQSY 045
3. 30RQSY 050
4. 30RQSY 060
5. 30RQSY 070
6. 30RQSY 078

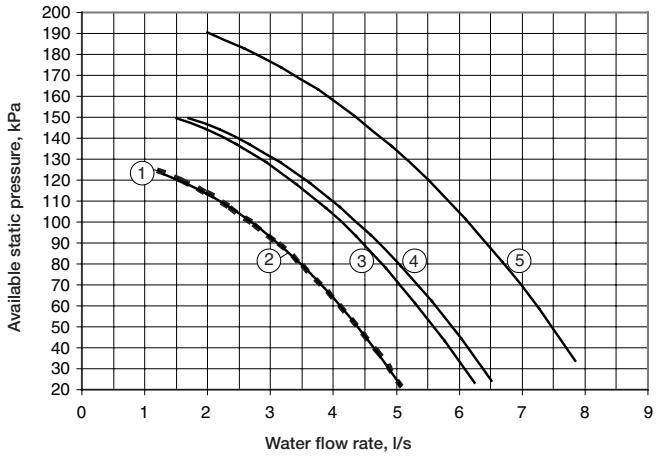

Legend

1. 30RQSY 080
2. 30RQSY 090
3. 30RQSY 100
4. 30RQSY 120
5. 30RQSY 140

High-pressure pump

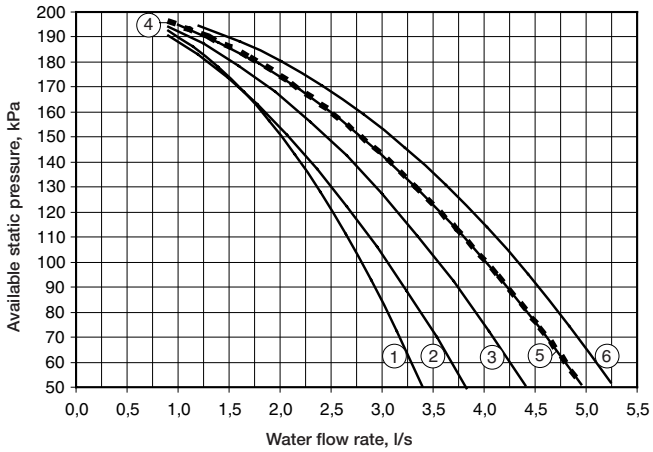

Legend

1. 30RQSY 039
2. 30RQSY 045
3. 30RQSY 050
4. 30RQSY 060
5. 30RQSY 070
6. 30RQSY 078

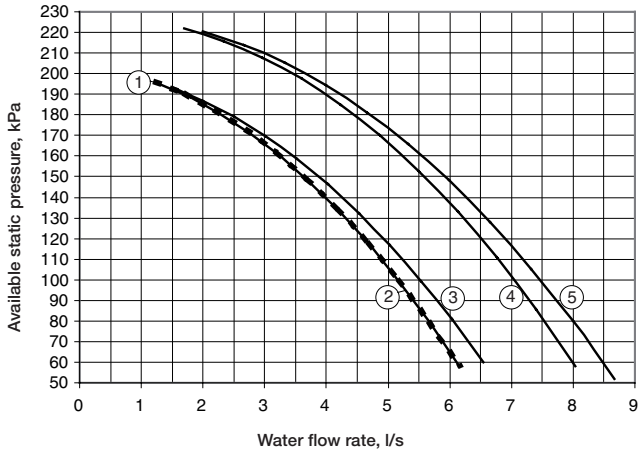

Legend

1. 30RQSY 080
2. 30RQSY 090
3. 30RQSY 100
4. 30RQSY 120
5. 30RQSY 140

Air pressure drop

Selection of a ductable unit

The 30RQSY ranges are designed for indoor installation in a plant room. For this type of installation the cold or hot air leaving the air-cooled air heat exchangers is discharged by the fans to the outside of the building, using a duct system.

The units are equipped with fans with available pressure, designed to operate with air discharge ducts with maximum pressure drops of 180 Pa or 240 Pa on certain sizes.

To compensate for these pressure drops this range of ductable units equipped with variable-speed fans with a maximum speed of 19 r/s.

In the cooling mode, the full-load or part-load speed is controlled by a patented algorithm that permanently optimises the condensing temperature to ensure the best unit energy efficiency (EER) whatever the operating conditions and pressure drops of the system ductwork.

In the heating mode, the full-load or part-load speed of each circuit is fixed and at the configured maximum (range configurable from 12 r/s to 19 r/s) based on the constraints and characteristics of the installation site. The maximum configured speed applies to both the heating and cooling mode.

Each refrigerant circuit (A and B) must have a separate ducting system to prevent any air recycling between the air heat exchangers of the different refrigerant circuits.

To collect the defrost water from the coils in the heating mode, 30RQSY units must be installed on an appropriate surface to permit efficient condensate drainage and evacuation and to p revent any risk of flooding at the site. A condensate collection pan is available for 30RQSY 039-078 units.

Selection based on the pressure drop

The cooling and heating capacities are given for an available pressure of 160 Pa and for a unit without filter.

To calculate the performances at other pressure drops please use the correction factors below.

Cooling mode

30RQSY 039-050/30RQSY 080-120

Duct pressure drop	Fan speed, r/s	Power input coefficient	Cooling capacity coefficient
0	12.00	0.943	1.019
50	13.33	0.962	1.012
100	14.66	0.980	1.006
130	15.46	0.990	1.003
160	16.26	1.000	1.000
200	17.31	1.012	0.998
240	18.36	1.023	0.996

30RQSY 060-078/30RQSY 140-160

Duct pressure drop	Fan speed, r/s	Power input coefficient	Cooling capacity coefficient
0	15.83	0.929	1.018
50	16.81	0.944	1.016
100	17.78	0.964	1.014
130	18.36	0.978	1.011
160	18.36	1.000	1.000
180	18.36	1.019	0.991

Heating mode

30RQSY 080-120

Duct pressure drop	Fan speed, r/s	Power input coefficient	Heating capacity coefficient
0	18.36	0.990	1.016
50	18.36	0.990	1.012
100	18.36	0.990	1.009
130	18.36	1.000	1.005
160	18.36	1.000	1.000
200	18.36	1.000	0.994
240	18.36	1.010	0.981

30RQSY 140-160

Duct pressure drop	Fan speed, r/s	Power input coefficient	Heating capacity coefficient
0	18.36	1.000	1.026
50	18.36	1.000	1.020
100	18.36	1.000	1.011
130	18.36	1.000	1.007
160	18.36	1.000	1.000
180	18.36	1.001	0.993

Note:

Pressure drop, clean filter = 6 Pa
Pressure drop, dirty filter = 12 Pa

Dimensions/clearances

30RQSY 039-045, units with and without hydronic module, without filter frame

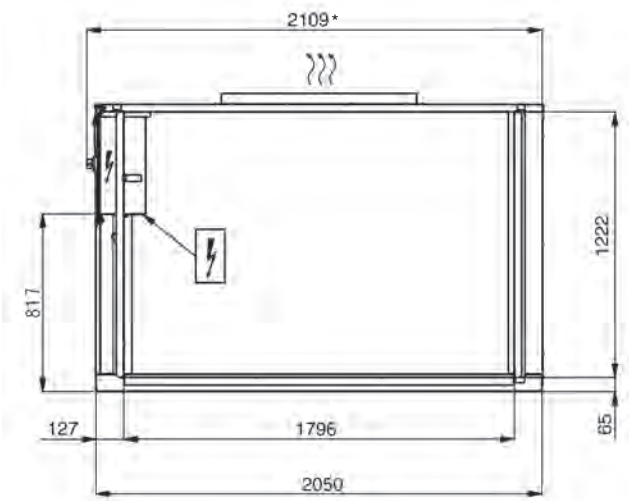

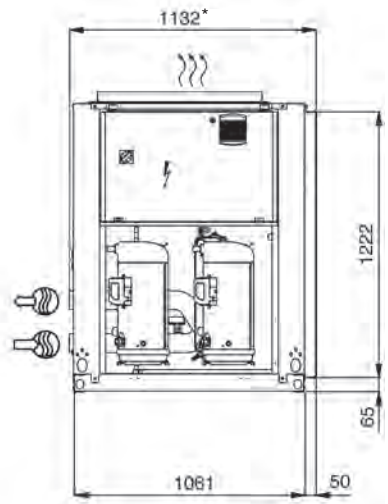

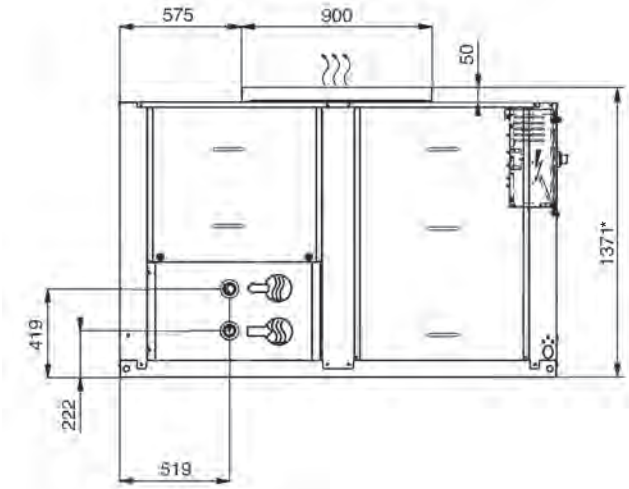

Legend:
All dimensions are given in mm

- Control box
- Water inlet
- Water outlet
- (1) Required clearances for air entry
- (2) Recommended space for maintenance
- Air outlet, do not obstruct
- Power supply inlet

* Overall dimensions

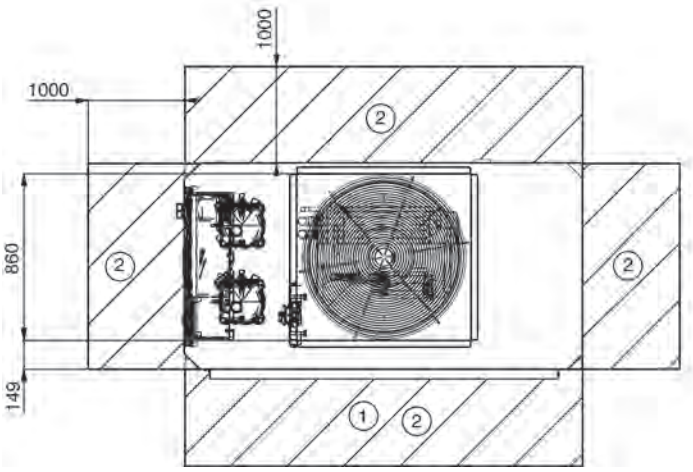

Notes:

A Non-certified drawings.
Refer to the certified dimensional drawings supplied with the unit or available on request, when designing an installation. For the location of fixing points, weight distribution and coordinates of the centre of gravity refer to the certified dimensional drawings.

B Provide a gutter around the unit to collect the condensate water or install the accessory condensate collection pan (30RQSY 039-078).

C The unit must be installed level (less than 2 mm per metre deviation in both axes).

D Units 30RQSY 039-078 are equipped with a sleeve on the air heat exchanger side to allow connection of a suction air frame.

30RQSY 039-045, option 23B, units with and without hydronic module, with filter frame

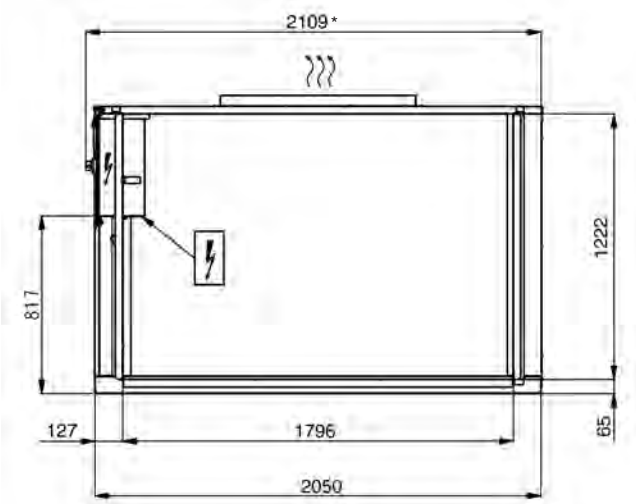

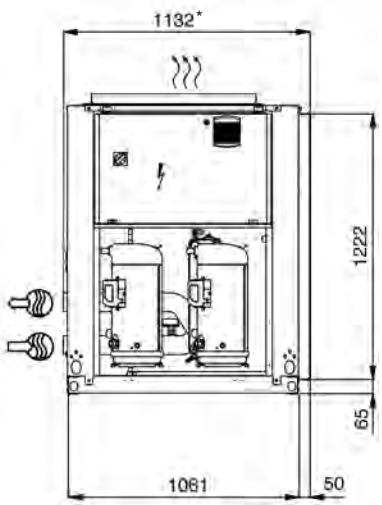

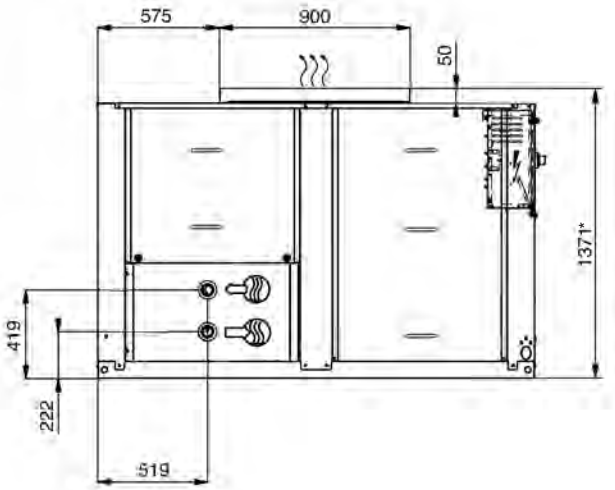

Legend:
All dimensions are given in mm

- Control box
- Water inlet
- Water outlet
- (1) Required clearances for air entry
- (2) Recommended space for maintenance
- Air outlet, do not obstruct
- Power supply inlet

* Overall dimensions

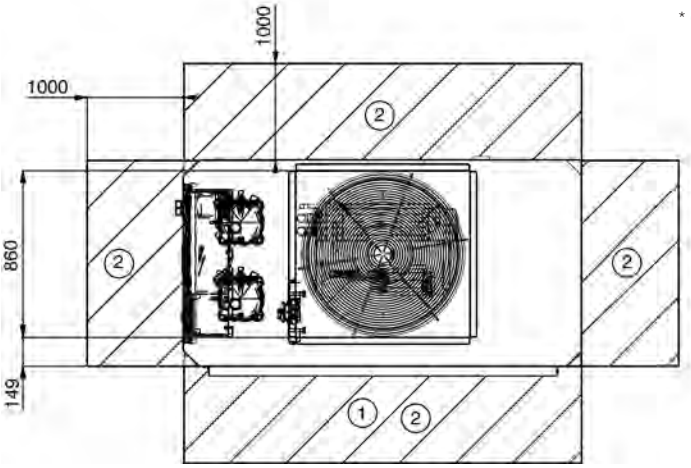

Notes:

A Non-certified drawings.
Refer to the certified dimensional drawings supplied with the unit or available on request, when designing an installation. For the location of fixing points, weight distribution and coordinates of the centre of gravity refer to the certified dimensional drawings.

B Provide a gutter around the unit to collect the condensate water or install the accessory condensate collection pan (30RQSY 039-078).

C The unit must be installed level (less than 2 mm per metre deviation in both axes).

D Units 30RQSY 039-078 are equipped with a sleeve on the air heat exchanger side to allow connection of a suction air frame.

30RQSY 050-078, units with and without hydronic module, without filter frame

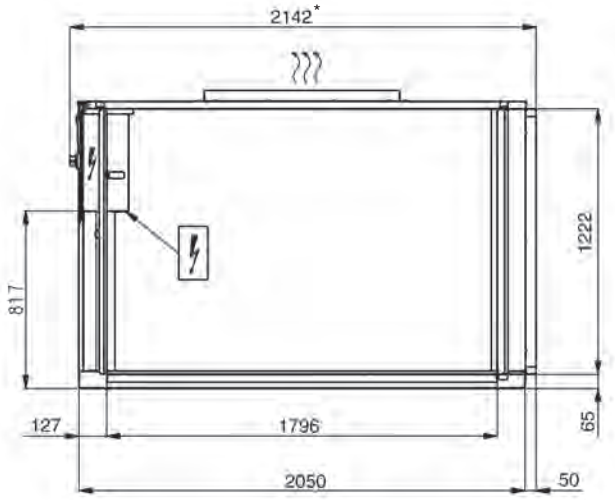

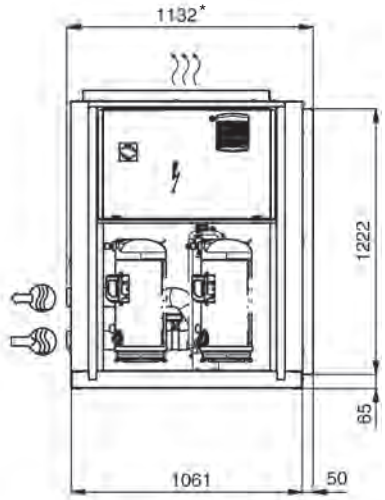

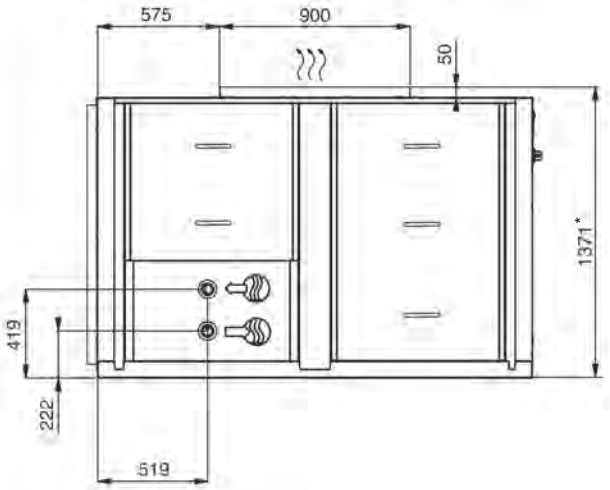

Legend:
All dimensions are given in mm

- Control box
- Water inlet
- Water outlet
- (1) Required clearances for air entry
- (2) Recommended space for maintenance
- Air outlet, do not obstruct
- Power supply inlet

* Overall dimensions

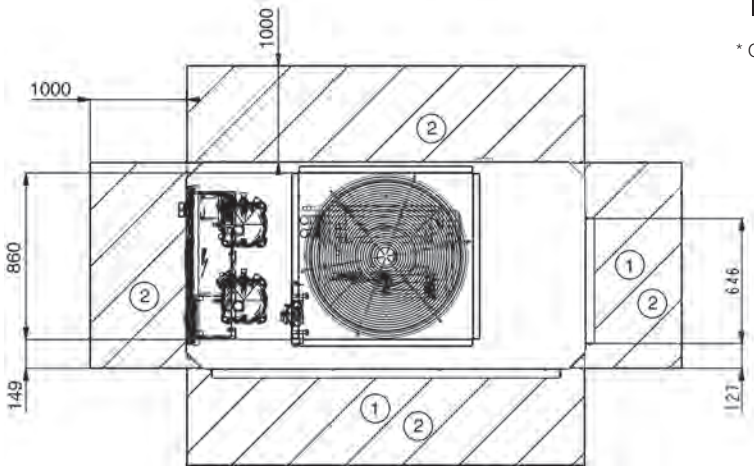

Notes:

A Non-certified drawings.
Refer to the certified dimensional drawings supplied with the unit or available on request, when designing an installation. For the location of fixing points, weight distribution and coordinates of the centre of gravity refer to the certified dimensional drawings.

B Provide a gutter around the unit to collect the condensate water or install the accessory condensate collection pan (30RQSY 039-078).

C The unit must be installed level (less than 2 mm per metre deviation in both axes).

D Units 30RQSY 039-078 are equipped with a sleeve on the air heat exchanger side to allow connection of a suction air frame.

30RQSY 050-078, option 23B, units with and without hydronic module, with filter frame

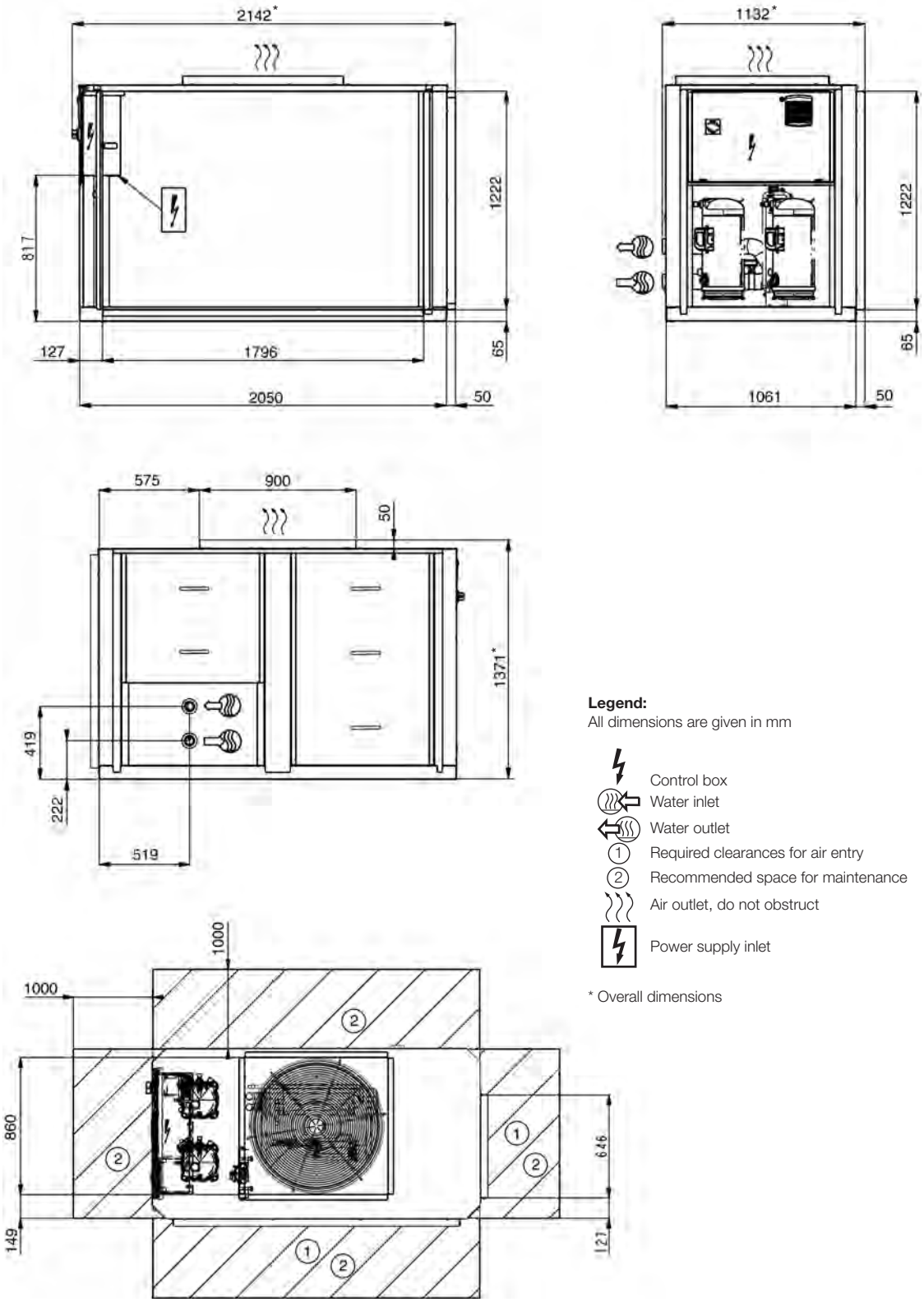

Legend:
All dimensions are given in mm

- Control box
- Water inlet
- Water outlet
- (1) Required clearances for air entry
- (2) Recommended space for maintenance
- Air outlet, do not obstruct
- Power supply inlet

* Overall dimensions

Notes:

A Non-certified drawings.
Refer to the certified dimensional drawings supplied with the unit or available on request, when designing an installation. For the location of fixing points, weight distribution and coordinates of the centre of gravity refer to the certified dimensional drawings.

B Provide a gutter around the unit to collect the condensate water or install the accessory condensate collection pan (30RQSY 039-078).

C The unit must be installed level (less than 2 mm per metre deviation in both axes).

D Units 30RQSY 039-078 are equipped with a sleeve on the air heat exchanger side to allow connection of a suction air frame.

30RQSY 080-120, units with and without hydronic module

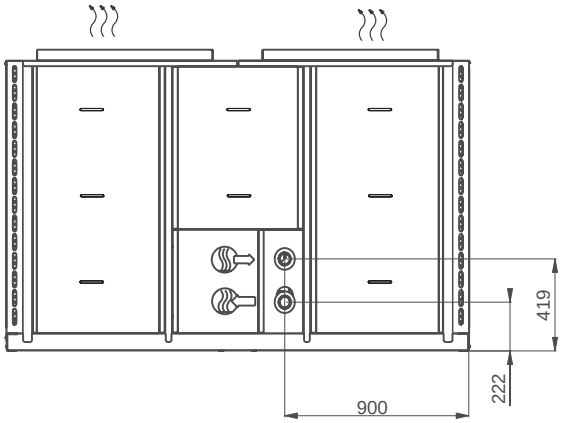

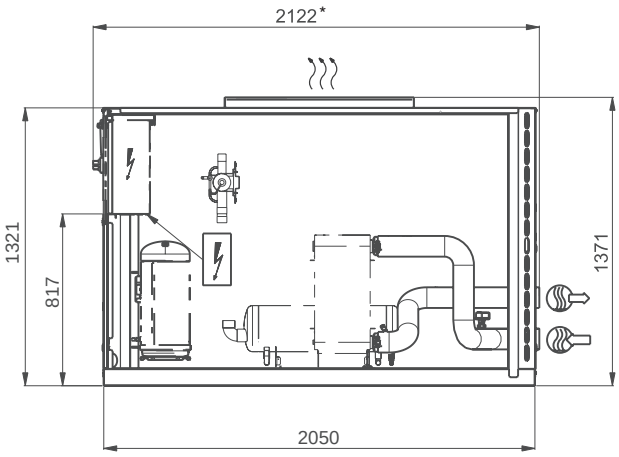

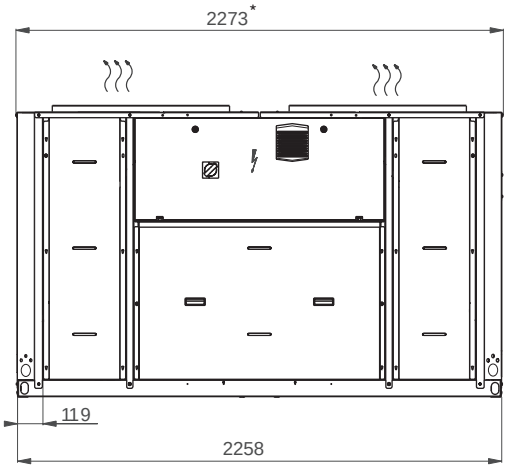

Legend:
All dimensions are given in mm

- Control box
- Water inlet
- Water outlet
- (1) Required clearances for air entry
- (2) Recommended space for maintenance
- Air outlet, do not obstruct
- Power supply inlet

* Overall dimensions

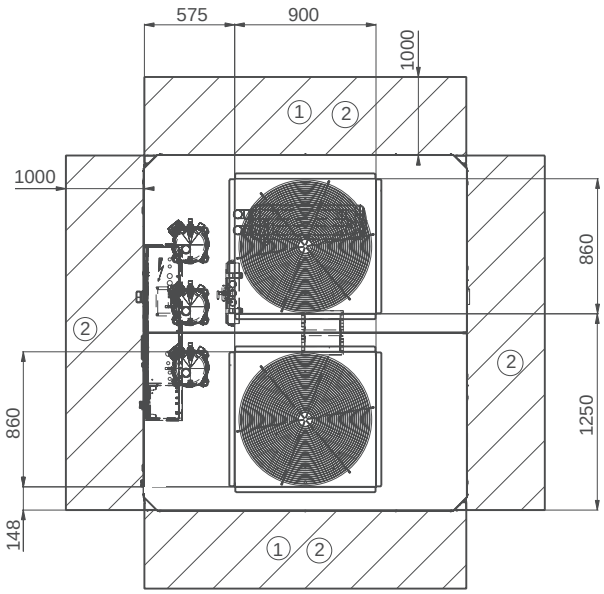

Notes:

A Non-certified drawings.
Refer to the certified dimensional drawings supplied with the unit or available on request, when designing an installation. For the location of fixing points, weight distribution and coordinates of the centre of gravity refer to the certified dimensional drawings.

B Provide a gutter around the unit to collect the condensate water or install the accessory condensate collection pan (30RQSY 039-078).

C The unit must be installed level (less than 2 mm per metre deviation in both axes).

D Units 30RQSY 039-078 are equipped with a sleeve on the air heat exchanger side to allow connection of a suction air frame.

30RQSY 140-160, units with and without hydronic module

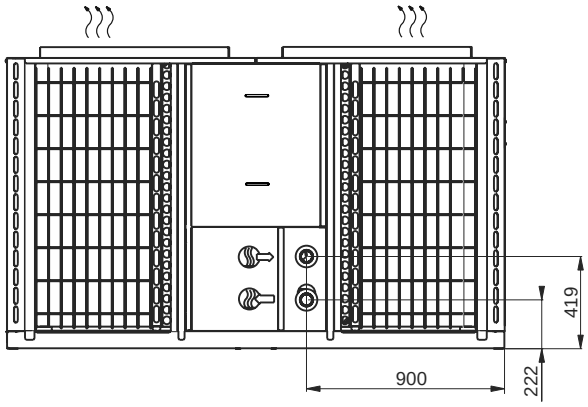

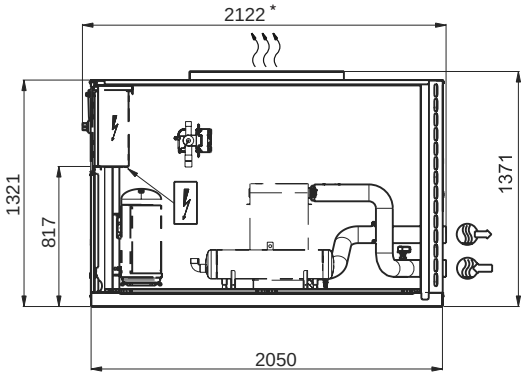

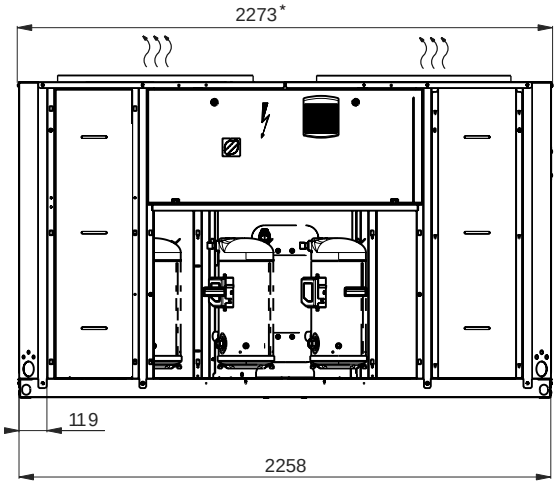

Legend:
All dimensions are given in mm

- Control box
- Water inlet
- Water outlet
- (1) Required clearances for air entry
- (2) Recommended space for maintenance
- Air outlet, do not obstruct
- Power supply inlet

* Overall dimensions

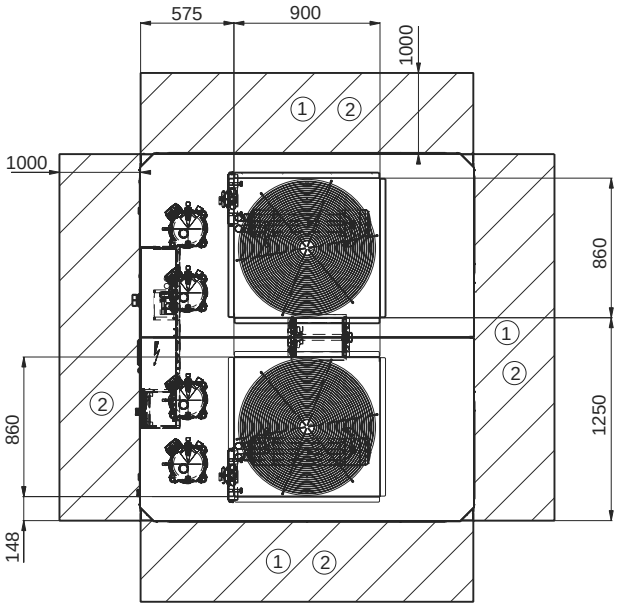

Notes:

A Non-certified drawings.
Refer to the certified dimensional drawings supplied with the unit or available on request, when designing an installation. For the location of fixing points, weight distribution and coordinates of the centre of gravity refer to the certified dimensional drawings.

B Provide a gutter around the unit to collect the condensate water or install the accessory condensate collection pan (30RQSY 039-078).

C The unit must be installed level (less than 2 mm per metre deviation in both axes).

D Units 30RQSY 039-078 are equipped with a sleeve on the air heat exchanger side to allow connection of a suction air frame.

Position of the desuperheater inlets and outlets

RQSY 039-080

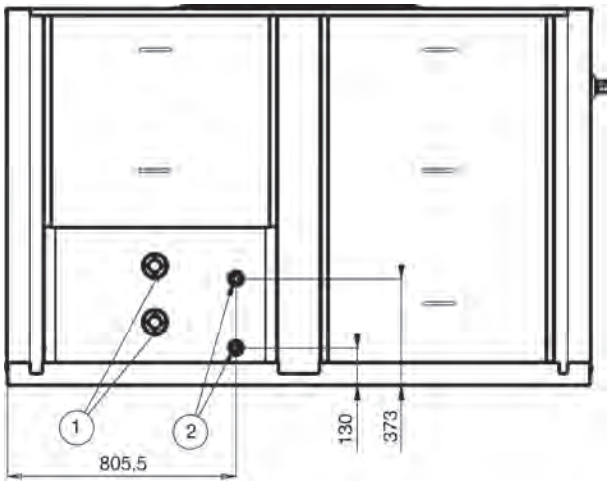

RQSY 090-120

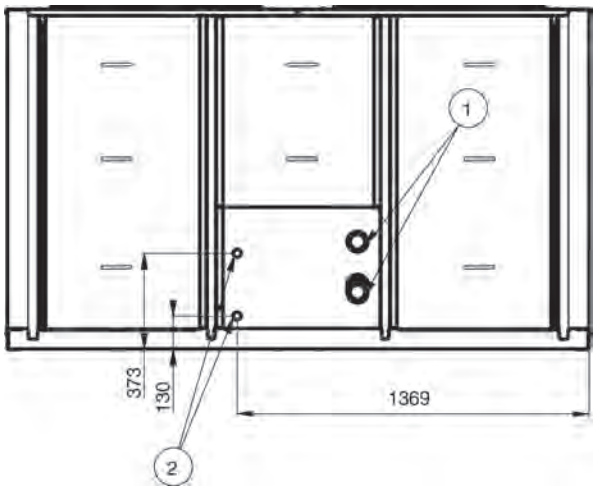

RQSY 140-160

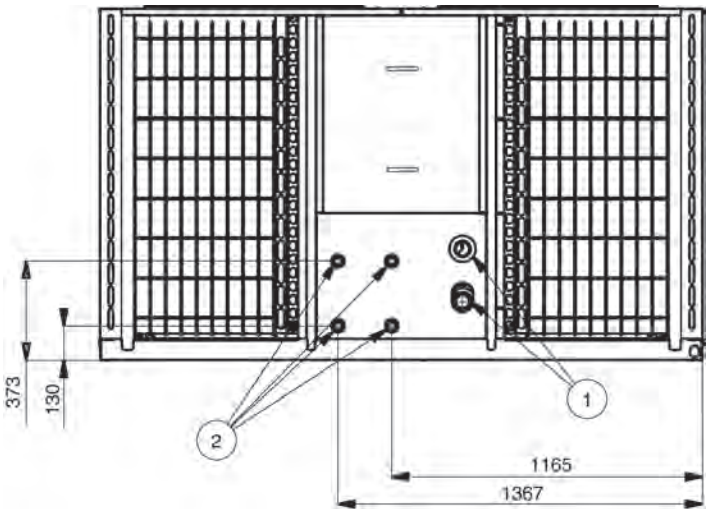

① Unit water inlet and outlet

② Water inlet and outlet, unit with option 49

30RQM/30RQP

Nominal heating capacity 170 to 540 kW
Nominal cooling capacity 160 to 510 kW

greenspeed AQUASNAP

High full and part-load efficiency

Compact and simple to install

Low sound level

Low refrigerant charge

Superior reliability

The AquaSnap heat pumps are the best value solution for commercial and industrial applications where installers, consultants and building owners require reduced installed costs, optimal performances and maximum quality.

The new heat pump generation AquaSnap features two new versions:

- The AquaSnap (30RQM) version features a compact all-in-one package where reduced investment cost (low Capex) is required.
- The AquaSnap Greenspeed® (30RQP) version features a compact all-in-one package optimized for part-load applications where high SCOP and SEER are required. The AquaSnap Greenspeed® equipped with variable speed fans and variable speed pump provides premium part load efficiency to reduce utility costs over the lifespan of the heat pump.

The AquaSnap heat pumps are designed to meet current and future Ecodesign and F-Gas requirements in terms of energy efficiency and reduced CO_2 emissions. They use the best technologies available today:

- Reduced refrigerant charge of non-ozone depleting R410A refrigerant
- Scroll compressors
- Greenspeed® variable-speed driven fans (30RQP models)
- Brazed plate heat exchangers with reduced water pressure drops
- Auto-adaptive microprocessor control with Greenspeed® intelligence
- Innovative Carrier “Free defrost” algorithm (pending patent)
- Touch pilot control with advanced IP connectivity and color touch screen user interface

Both AquaSnap ranges can be equipped with an integrated hydronic module, limiting the installation to straight-forward operations like connection of the power supply and the water supply and return piping (plug & play), within the dimensions of the standard unit.

Physical data

EUROVENT CERTIFIED PERFORMANCE
www.eurovent-certification.com

30RQM				160	180	210	230	240	270	310	330	380	430	470	520
Cooling															
Standard unit	C1	Nominal capacity	kW	156	170	203	228	236	268	301	326	376	424	459	511
Full load performances*	C1	EER	kW/kW	2.80	2.91	2.76	2.79	2.93	2.91	2.90	2.91	2.9	2.9	2.75	2.74
	C1	Eurovent class cooling		C	B	C	C	B	B	B	B	B	B	C	C
Full load performances***	C1	Gross nominal capacity	kW	157	171	204	229	236	269	302	327	377	425	460	512
	C1	Gross EER	kW/kW	2.84	2.95	2.80	2.82	2.96	2.91	2.92	2.93	2.90	2.90	2.78	2.77
Seasonal efficiency*		ESEER	kW/kW	3.85	3.87	3.90	3.96	3.89	3.96	4.01	4.02	4.05	4.06	4.05	4.02
Seasonal efficiency***		Gross ESEER	kW/kW	3.96	4.00	4.06	4.10	3.99	4.08	4.11	4.11	4.15	4.18	4.19	4.15
Heating															
Standard unit	H1	Nominal capacity	kW	179	196	238	213	270	290	339	355	411	473	456	434
Full load performances*	H1	COP	kW/kW	3.69	3.73	3.75	3.51	3.82	3.70	3.69	3.77	3.68	3.72	3.62	3.57
	H1	Eurovent class heating		D	D	C	E	C	D	D	C	D	D	D	E
	H2	Nominal capacity	kW	173	189	230	242	259	279	326	342	396	456	498	537
	H2	COP	kW/kW	2.94	2.98	3.00	2.87	3.08	2.92	2.95	3.0	2.93	2.97	2.95	2.94
	H2	Eurovent class heating		C	B	B	C	B	C	C	B	C	C	C	C
Full load performances***	H1	Gross nominal capacity	kW	179	195	237	213	269	290	338	354	410	472	455	432
	H1	Gross COP	kW/kW	3.72	3.74	3.79	3.54	3.84	3.73	3.72	3.76	3.70	3.75	3.65	3.60
	H2	Gross nominal capacity	kW	172	188	229	242	259	278	325	341	395	454	497	535
	H2	Gross COP	kW/kW	2.96	3.00	3.02	2.89	3.09	2.93	2.96	2.99	2.94	2.98	2.96	2.95
Seasonal efficiency**	H1	SCOP	kW/kW	3.07	3.12	3.11	3.13	3.14	3.13	3.09	3.13	3.20	3.31	3.32	3.29
	H1	ηs heat	%	120	122	121	122	123	122	120	122	125	129	130	129
	H1	Prated	kW	127	141	167	177	169	204	224	244	283	325	361	379
Sound levels															
Standard unit															
Sound power level(1)			dB(A)	90	91	91	91	92	92	93	93	94	94	94	94
Sound pressure level at 10 m (2)			dB(A)	58	59	59	59	60	60	61	61	62	62	62	62
Standard unit + option 15 (3)															
Sound power level (1)			dB(A)	89	90	90	90	91	91	91	92	92	93	93	93
Sound pressure level at 10 m (2)			dB(A)	57	58	58	58	59	59	59	60	60	61	61	61
Dimensions															
Length			mm	2410	2410	2410	2410	3604	3604	3604	3604	4797	4797	4797	4797
Width			mm	2253	2253	2253	2253	2253	2253	2253	2253	2253	2253	2253	2253
Height			mm	2297	2297	2297	2297	2297	2297	2297	2297	2297	2297	2297	2297
Operating Weight (4)															
Standard unit			kg	1426	1505	1633	1656	2068	2216	2341	2572	3040	3289	3302	3342
Standard unit + option 15 (4)			kg	1509	1588	1741	1764	2176	2342	2467	2716	3202	3470	3482	3522
Standard unit + option 15 + option 116S (4)			kg	1605	1683	1824	1846	2267	2463	2596	2813	3281	3571	3620	3660
Compressors				Hermetic scroll 48.3 tr/s											
Circuit A				1	1	2	2	2	2	2	2	3	4	4	4
Circuit B				2	2	2	2	2	3	3	4	4	4	4	4
No. of control stages				3	3	4	4	4	5	5	6	7	8	8	8
Refrigerant				R410A											
Circuit A charge (4)			kg	14.5	22.0	23.0	24.0	27.0	27.0	30.0	33.0	42.0	53.0	54.0	56.0
			tCO^2eq	30.3	45.9	48.0	50.1	56.4	56.4	62.6	68.9	87.7	110.7	112.8	116.9
Circuit B charge (4)			kg	23.0	23.0	23.0	24.0	35.0	36.0	48.5	53.0	53.0	53.0	54.0	56.0
			tCO^2eq	48.0	48.0	48.0	50.1	73.1	75.2	101.3	110.7	110.7	110.7	112.8	116.9
Capacity control				Touch Pilot Control											
Minimum capacity			%	33%	33%	25%	25%	25%	20%	20%	17%	14%	13%	13%	13%
Air heat exchangers				Grooved copper tubes and aluminium fins											

* In accordance with standard EN14511-3:2013.
** In accordance with standard EN14825:2013, average climate
*** Not in accordance with standard EN14511-3:2013
C1 Cooling mode conditions: Evaporator water entering/leaving temperature 12°C/7°C, outside air temperature 35°C, evaporator fooling factor 0 m² K/W
H1 Heating mode conditions: Water heat exchanger water entering/leaving temperature 30°C/35°C, fouling factor 0 m2 K/W. Outside air temperature 7°C db/6°C wb
H2 Heating mode conditions: Water heat exchanger water entering/leaving temperature 40°C/45°C, fouling factor 0 m2 K/W. Outside air temperature 7°C db/6°C wb
(1) In dB ref=10^{-12} W, (A) weighting. Declared dualnumber noise emission values in accordance with ISO 4871 (with an associated uncertainty of +/-3 dB(A)). Measured in accordance with ISO 9614-1 and certified by Eurovent.
(2) In dB ref 20 µPa, (A) weighting. Declared dualnumber noise emission values in accordance with ISO 4871 (with an associated uncertainty of +/-3 dB(A)). For information, calculated from the sound power level Lw(A).
(3) Options: 15 = Low noise level, 116S = High Pressure dual-pump hydronic module
(4) Weights are guidelines only. Refer to the unit nameplate.

Eurovent certified data

Physical data

30RQM		160	180	210	230	240	270	310	330	380	430	470	520
Fans		Axial Flying Bird 4 with rotating shroud											
Quantity		3	4	4	4	5	5	6	6	7	8	8	8
Maximum total air flow	l/s	13542	18056	18056	18056	22569	22569	27083	27083	31597	36111	36111	36111
Maximum rotation speed	tr/s	16	16	16	16	16	16	16	16	16	16	16	16
Water heat exchanger		Twin-circuit plate heat exchanger											
Water content	l	15	15	15	19	27	27	35	44	44	44	47	53
Max. water-side operating pressure without hydronic module	kPa	3200	3200	3200	3200	3200	3200	3200	3200	3200	3200	3200	3200
Hydronic Module		Pump, Victaulic screen filter, safety valve, water valve and air purge, pressure sensors, expansion tank (option)											
Pump		Centrifugal, monocell, 48.3 r/s, low or high pressure (as required), single or dual pump (as required)											
Expansion tank volume	l	50	50	50	50	80	80	80	80	80	80	80	80
Max. water-side operating pressure with hydronic module	kPa	400	400	400	400	400	400	400	400	400	400	400	400
Water connections with or without hydronic module		Victaulic type											
Diameter	inch	3	3	3	3	4	4	4	4	4	4	4	4
Outside tube diameter	mm	88.9	88.9	88.9	88.9	114.3	114.3	114.3	114.3	114.3	114.3	114.3	114.3
Chassis paint colour		Colour code RAL 7035											

* In accordance with standard EN14511-3:2013.
** In accordance with standard EN14825:2013, average climate
*** Not in accordance with standard EN14511-3:2013
C1 Cooling mode conditions: Evaporator water entering/leaving temperature 12°C/7°C, outside air temperature 35°C, evaporator fooling factor 0 m^2 K/W
H1 Heating mode conditions: Water heat exchanger water entering/leaving temperature 30°C/35°C, fouling factor 0 m2 K/W. Outside air temperature 7°C db/6°C wb
H2 Heating mode conditions: Water heat exchanger water entering/leaving temperature 40°C/45°C, fouling factor 0 m2 K/W. Outside air temperature 7°C db/6°C wb
(1) In dB ref=10^{-12} W, (A) weighting. Declared dualnumber noise emission values in accordance with ISO 4871 (with an associated uncertainty of +/-3 dB(A)). Measured in accordance with ISO 9614-1 and certified by Eurovent.
(2) In dB ref 20 µPa, (A) weighting. Declared dualnumber noise emission values in accordance with ISO 4871 (with an associated uncertainty of +/-3 dB(A)). For information, calculated from the sound power level Lw(A).
(3) Options: 15 = Low noise level, 116S = High Pressure dual-pump hydronic module
(4) Weights are guidelines only. Refer to the unit nameplate.

Eurovent certified data

HEATING

Physical data

EUROVENT CERTIFIED PERFORMANCE
www.eurovent-certification.com

30RQP				160	180	210	230	240	270	310	330	380	430	470	520
Cooling															
Standard unit	C1	Nominal capacity	kW	156	170	203	228	236	268	301	326	376	424	459	511
Full load performances*	C1	EER	kW/kW	2.80	2.91	2.76	2.79	2.93	2.91	2.90	2.91	2.9	2.9	2.75	2.74
	C1	Eurovent class cooling		C	B	C	C	B	B	B	B	B	B	C	C
Full load performances***	C1	Gross nominal capacity	kW	157	171	204	229	236	269	302	327	377	425	460	512
	C1	Gross EER	kW/kW	2.84	2.95	2.80	2.82	2.96	2.91	2.92	2.93	2.90	2.90	2.78	2.77
Seasonal efficiency*		ESEER	kW/kW	4.05	4.09	4.10	4.14	4.14	4.14	4.19	4.19	4.27	4.28	4.26	4.20
Seasonal efficiency***		Gross ESEER	kW/kW	4.17	4.23	4.28	4.29	4.25	4.28	4.31	4.30	4.40	4.43	4.42	4.36
Heating															
Standard unit	H1	Nominal capacity	kW	179	196	238	213	270	290	339	355	411	473	456	434
Full load performances*	H1	COP	kW/kW	3.69	3.73	3.75	3.51	3.81	3.70	3.69	3.77	3.68	3.72	3.62	3.57
	H1	Eurovent class heating		D	D	C	E	C	D	D	C	D	D	D	E
	H2	Nominal capacity	kW	173	189	230	242	259	279	326	342	396	456	498	537
	H2	COP	kW/kW	2.94	3.00	3.00	2.87	3.08	2.92	2.95	3.00	2.92	2.97	2.94	2.94
	H2	Eurovent class heating		C	B	B	C	B	C	C	B	C	C	C	C
Full load performances***	H1	Gross nominal capacity	kW	179	195	237	213	269	290	338	354	410	472	455	432
	H1	Gross COP	kW/kW	3.72	3.74	3.79	3.54	3.84	3.73	3.72	3.76	3.70	3.75	3.65	3.60
	H2	Gross nominal capacity	kW	172	188	229	242	259	278	325	341	395	454	497	535
	H2	Gross COP	kW/kW	2.96	3.00	3.02	2.89	3.09	2.93	2.96	2.99	2.94	2.98	2.96	2.95
Seasonal efficiency**	H1	SCOP	kW/kW	3.24	3.26	3.26	3.31	3.31	3.29	3.27	3.32	3.33	3.42	3.43	3.38
	H1	ηs heat	%	127	127	128	129	129	129	128	130	130	134	134	132
	H1	Prated	kW	127	141	167	177	169	204	224	244	283	325	361	379
Sound levels															
Standard unit															
Sound power level(1)			dB(A)	90	91	91	91	92	92	93	93	94	94	94	94
Sound pressure level at 10 m (2)			dB(A)	58	59	59	59	60	60	61	61	62	62	62	62
Standard unit + option 15 (3)															
Sound power level (1)			dB(A)	89	90	90	90	91	91	91	92	92	93	93	93
Sound pressure level at 10 m (2)			dB(A)	57	58	58	58	59	59	59	60	60	61	61	61
Dimensions															
Length			mm	2410	2410	2410	2410	3604	3604	3604	3604	4797	4797	4797	4797
Width			mm	2253	2253	2253	2253	2253	2253	2253	2253	2253	2253	2253	2253
Height			mm	2297	2297	2297	2297	2297	2297	2297	2297	2297	2297	2297	2297
Operating Weight (4)															
Standard unit			kg	1462	1542	1670	1693	2105	2252	2378	2608	3076	3347	3359	3408
Standard unit + option 15 (4)			kg	1545	1624	1778	1801	2213	2378	2504	2752	3239	3527	3539	3588
Standard unit + option 15 + option 116S (4)			kg	1640	1720	1860	1882	2304	2500	2632	2849	3318	3629	3677	3726
Compressors				Hermetic scroll 48.3 tr/s											
Circuit A				1	1	2	2	2	2	2	2	3	4	4	4
Circuit B				2	2	2	2	2	3	3	4	4	4	4	4
No. of control stages				3	3	4	4	4	5	5	6	7	8	8	8
Refrigerant				R410A											
Circuit A charge (4)			kg	14.5	22.0	23.0	24.0	27.0	27.0	30.0	33.0	42.0	53.0	54.0	56.0
			tCO_2eq	30.3	45.9	48.0	50.1	56.4	56.4	62.6	68.9	87.7	110.7	112.8	116.9
Circuit B charge (4)			kg	23.0	23.0	23.0	24.0	35.0	36.0	48.5	53.0	53.0	53.0	54.0	56.0
			tCO_2eq	48.0	48.0	48.0	50.1	73.1	75.2	101.3	110.7	110.7	110.7	112.8	116.9
Capacity control				Touch Pilot Control											
Minimum capacity			%	33%	33%	25%	25%	25%	20%	20%	17%	14%	13%	13%	13%
Air heat exchangers				Grooved copper tubes and aluminium fins											

* In accordance with standard EN14511-3:2013.
** In accordance with standard EN14825:2013, average climate
*** Not in accordance with standard EN14511-3:2013
C1 Cooling mode conditions: Evaporator water entering/leaving temperature 12°C/7°C, outside air temperature 35°C, evaporator fooling factor 0 m² K/W
H1 Heating mode conditions: Water heat exchanger water entering/leaving temperature 30°C/35°C, fouling factor 0 m2 K/W. Outside air temperature 7°C db/6°C wb
H2 Heating mode conditions: Water heat exchanger water entering/leaving temperature 40°C/45°C, fouling factor 0 m2 K/W. Outside air temperature 7°C db/6°C wb
(1) In dB ref=10^{-12} W, (A) weighting. Declared dualnumber noise emission values in accordance with ISO 4871 (with an associated uncertainty of +/-3 dB(A)). Measured in accordance with ISO 9614-1 and certified by Eurovent.
(2) In dB ref 20 µPa, (A) weighting. Declared dualnumber noise emission values in accordance with ISO 4871 (with an associated uncertainty of +/-3 dB(A)). For information, calculated from the sound power level Lw(A).
(3) Options: 15 = Low noise level, 116S = High Pressure dual-pump hydronic module
(4) Weights are guidelines only. Refer to the unit nameplate.

Eurovent certified data

Physical data

30RQP		160	180	210	230	240	270	310	330	380	430	470	520
Fans		Axial Flying Bird 4 with rotating shroud											
Quantity		3	4	4	4	5	5	6	6	7	8	8	8
Maximum total air flow	l/s	13542	18056	18056	18056	22569	22569	27083	27083	31597	36111	36111	36111
Maximum rotation speed	tr/s	16	16	16	16	16	16	16	16	16	16	16	16
Water heat exchanger		Twin-circuit plate heat exchanger											
Water content	l	15	15	15	19	27	27	35	44	44	44	47	53
Max. water-side operating pressure without hydronic module	kPa	3200	3200	3200	3200	3200	3200	3200	3200	3200	3200	3200	3200
Hydronic Module		Pump, Victaulic screen filter, safety valve, water valve and air purge, pressure sensors, expansion tank (option)											
Pump		Centrifugal, monocell, 48.3 r/s, low or high pressure (as required), single or dual pump (as required)											
Expansion tank volume	l	50	50	50	50	80	80	80	80	80	80	80	80
Max. water-side operating pressure with hydronic module	kPa	400	400	400	400	400	400	400	400	400	400	400	400
Water connections with or without hydronic module													
Diameter	inch	3	3	3	3	4	4	4	4	4	4	4	4
Outside tube diameter	mm	88.9	88.9	88.9	88.9	114.3	114.3	114.3	114.3	114.3	114.3	114.3	114.3
Chassis paint colour		Colour code RAL 7035											

* In accordance with standard EN14511-3:2013.
** In accordance with standard EN14825:2013, average climate
*** Not in accordance with standard EN14511-3:2013
C1 Cooling mode conditions: Evaporator water entering/leaving temperature 12°C/7°C, outside air temperature 35°C, evaporator fooling factor 0 m^2 K/W
H1 Heating mode conditions: Water heat exchanger water entering/leaving temperature 30°C/35°C, fouling factor 0 m2 K/W. Outside air temperature 7°C db/6°C wb
H2 Heating mode conditions: Water heat exchanger water entering/leaving temperature 40°C/45°C, fouling factor 0 m2 K/W. Outside air temperature 7°C db/6°C wb
(1) In dB ref=10^{-12} W, (A) weighting. Declared dualnumber noise emission values in accordance with ISO 4871 (with an associated uncertainty of +/-3 dB(A)). Measured in accordance with ISO 9614-1 and certified by Eurovent.
(2) In dB ref 20 µPa, (A) weighting. Declared dualnumber noise emission values in accordance with ISO 4871 (with an associated uncertainty of +/-3 dB(A)). For information, calculated from the sound power level Lw(A).
(3) Options: 15 = Low noise level, 116S = High Pressure dual-pump hydronic module
(4) Weights are guidelines only. Refer to the unit nameplate.

Eurovent certified data

HEATING

Electrical data

30RQM		160	180	210	230	240	270	310	330	380	430	470	520
Power circuit													
Nominal power supply	V-ph-Hz	400 - 3 -50											
Voltage range	V	360 - 440											
Control circuit supply		24 V via internal transformer											
Nominal unit current draw(1)													
Circuits A + B	A	100	110	133	147	151	166	191	199	233	266	294	322
Maximum unit power input(2)													
Circuits A + B	kW	80	88	107	118	120	134	152	161	188	215	236	258
Cosine phi, unit at max. capacity (2)		0.88	0.87	0.88	0.88	0.87	0.88	0.87	0.88	0.88	0.88	0.88	0.88
Maximum unit current draw (Un-10%)(3)													
Circuits A + B	A	144	158	192	211	215	241	273	289	337	385	422	460
Maximum unit current draw (Un)(4)													
Circuits A + B	A	133	146	177	195	199	222	252	266	310	354	390	425
Maximum start-up current, standard unit (Un)(5)													
Circuits A + B	A	307	356	352	406	409	396	462	440	485	529	600	636
Max. start-up current, unit with soft starter (Un)(5)													
Circuits A + B	A	261	283	305	332	336	350	389	394	438	482	527	562

(1) Standardised Eurovent conditions: Evaporator entering/leaving water temperature 12 °C/7 °C, outside air temperature 35 °C.
(2) Power input, compressors and fans, at the unit operating limits (saturated suction temperature 15 °C, saturated condensing temperature 68.3 °C) and nominal voltage of 400 V (data given on the unit nameplate).
(3) Maximum unit operating current at maximum unit power input and 360 V.
(4) Maximum unit operating current at maximum unit power input and 400 V (values given on the unit nameplate).
(5) Maximum instantaneous start-up current at operating limit values (maximum operating current of the smallest compressor(s) + fan current + locked rotor current of the largest compressor).

Fan motor electrical data: Units at Eurovent equivalent conditions and motor ambient air temperature of 50 °C at 400 V: 3.8 A, start-up current 20 A, power input 1.75 kW.

30RQP		160	180	210	230	240	270	310	330	380	430	470	520
Power circuit													
Nominal power supply	V-ph-Hz	400 - 3 -50											
Voltage range	V	360 - 440											
Control circuit supply		24 V via internal transformer											
Nominal unit current draw(1)													
Circuits A + B	A	97	107	130	144	147	162	186	195	227	260	288	316
Maximum unit power input(2)													
Circuits A + B	kW	81	88	108	118	120	134	153	161	188	215	237	259
Cosine phi, unit at max. capacity(2)		0.88	0.88	0.88	0.88	0.88	0.88	0.88	0.88	0.88	0.88	0.88	0.88
Maximum unit current draw (Un-10%)(3)													
Circuits A + B	A	142	154	189	208	211	237	268	284	331	378	416	454
Maximum unit current draw (Un)(4)													
Circuits A + B	A	131	142	174	192	195	218	247	261	305	348	383	419
Maximum start-up current, standard unit (Un)(5)													
Circuits A + B	A	305	353	349	402	405	392	458	436	479	523	594	629
Max. start-up current, unit with soft starter (Un)(5)													
Circuits A + B	A	259	279	302	329	332	346	384	389	433	476	520	556

(1) Standardised Eurovent conditions: Evaporator entering/leaving water temperature 12 °C/7 °C, outside air temperature 35 °C.
(2) Power input, compressors and fans, at the unit operating limits (saturated suction temperature 15 °C, saturated condensing temperature 68.3 °C) and nominal voltage of 400 V (data given on the unit nameplate).
(3) Maximum unit operating current at maximum unit power input and 360 V.
(4) Maximum unit operating current at maximum unit power input and 400 V (values given on the unit nameplate).
(5) Maximum instantaneous start-up current at operating limit values (maximum operating current of the smallest compressor(s) + fan current + locked rotor current of the largest compressor).

Fan motor electrical data upstream variable frequency drive: Units at Eurovent equivalent conditions and motor ambient air temperature of 50 °C at 400 V: 3.0 A, start-up current 20 A, power input 1.75 kW.

Options

Options	No.	Description	Advantages	Utilisation
Corrosion protection, traditional coils	3A	Fins made of pre-treated aluminium (polyurethane and epoxy)	Improved corrosion resistance, recommended for moderate marine and urban environments	30RQM/30RQP 160-520
Unit equipped for air discharge ducting	12	Unit equipped with high static variable-speed fans (maximum 200 Pa), each fan equipped with a connection flange allowing the connection to the ducting system.	Ducted fan discharge, optimised condensing or evaporating temperature control, based on the operating conditions and system characteristics	30RQM/30RQP 160-520
Low noise level	15	Aesthetic and sound absorbing compressor enclosure	Noise level reduction by 1 to 2 dB(A)	30RQM/30RQP 160-520
Grilles and enclosure panels	23	Metal grilles on the 4 unit sides, plus side enclosure panels at each end of the coil	Improves aesthetics, protection against intrusion to the unit interior, coil and piping protection against impacts.	30RQM/30RQP 160-520
Enclosure panels	23A	Side enclosure panels at each end of the coil	Improves aesthetics, coil and piping protection against impacts.	30RQM/30RQP 160-520
Soft Starter	25	Electronic starter on each compressor	Reduced start-up current	30RQM/30RQP 160-520
Winter operation down to -20°C	28	Fan speed control of lead fan for each circuit using a variable frequency drive	Stable unit operation for outside air temperature from 0°C down to -20°C in cooling mode	30RQM 160-520
Water exchanger frost protection	41	Electric heater on the water exchanger and the water piping	Water exchanger module frost protection between 0°C and -20°C outside air temperature	30RQM/30RQP 160-520
Water exchanger and hydraulic mod. frost protection	42A	Electric heater on the evaporator, hydronic module and optional expansion tank	Water exchanger and hydronic module frost protection between 0°C and -20°C outside air temperature	30RQM/30RQP 160-520
Partial heat recovery	49	Unit equipped with one desuperheater on each refrigerant circuit	Production of free high-temperature hot-water simultaneously with hot or chilled water production	30RQM/30RQP 160-520
Master/slave operation	58	Unit equipped with supplementary water outlet temperature sensor kit to be field-installed allowing master/slave operation of two units connected in parallel	Optimised operation of two units connected in master/slave operation with operating time equalisation	30RQM/30RQP 160-520
Compressor discharge valves	93A	Shut-off valve on the compressor discharge piping	Simplied maintenance. Possibility to store the refrigerant charge in the condenser side during servicing	30RQM/30RQP 160-520
HP single-pump hydronic module	116R	Single high-pressure water pump, water filter, electronic water flow control, pressure transducers. For more details, refer to the dedicated chapter (expansion tank not included) Select option 293A for built-in safety hydraulic components.	Easy and fast installation (plug & play)	30RQM/30RQP 160-520
HP dual-pump hydronic module	116S	Dual high-pressure water pump, water filter, electronic water flow control, pressure transducers. For more details, refer to the dedicated chapter (expansion tank not included) Select option 293A for built-in safety hydraulic components.	Easy and fast installation (plug & play)	30RQM/30RQP 160-520
LP single-pump hydronic module	116T	Single low-pressure water pump, water filter, electronic water flow control, pressure transducers. For more details, refer to the dedicated chapter (expansion tank not included) Select option 293A for built-in safety hydraulic components.	Easy and fast installation (plug & play)	30RQM/30RQP 160-520
LP dual-pump hydronic module	116U	Dual low-pressure water pump, water filter, electronic water flow control, pressure transducers. For more details, refer to the dedicated chapter (expansion tank not included) Select option 293A for built-in safety hydraulic components.	Easy and fast installation (plug & play)	30RQM/30RQP 160-520
HP variable-speed single-pump hydronic module	116V	Single high-pressure water pump with variable speed drive (VSD), water filter, electronic water flow control, pressure transducers. Multiple possibilities of water flow control. For more details, refer to the dedicated chapter (expansion tank not included) Select option 293A for built-in safety hydraulic components.	Easy and fast installation (plug & play), significant pumping energy cost savings (more than two-thirds), tighter water flow control, improved sytem reliability	30RQM/30RQP 160-520
HP variable-speed dual-pump hydronic module	116W	Dual high-pressure water pump with variable speed drive (VSD), water filter, electronic flow switch, pressure transducers. Multiple possibilities of water flow control. For more details, refer to the dedicated chapter (expansion tank not included) Select option 293A for built-in safety hydraulic components.	Easy and fast installation (plug & play), significant pumping energy cost savings (more than two-thirds), tighter water flow control, improved sytem reliability	30RQM/30RQP 160-520
J-Bus gateway	148B	Two-directional communication board complying with JBus protocol	Connects the unit by communication bus to a building management system	30RQM/30RQP 160-520
Lon gateway	148D	Two-directional communication board complying with Lon Talk protocol	Connects the unit by communication bus to a building management system	30RQM/30RQP 160-520
Bacnet over IP gateway	149	Two-directional high-speed communication using BACnet protocol over Ethernet network (IP)	Easy and high-speed connection by ethernet line to a building management system. Allows access to multiple unit parameters	30RQM/30RQP 160-520
Energy Management Module	156	Control board with additional inputs/outputs. See Energy Management Module option chapter	Extended remote control capabilities (Set-point reset, ice storage end, demand limits, boiler on/off command...)	30RQM/30RQP 160-520
Coil defrost resistance heaters	252	Electric heaters under the coils and the condensate pans	Prevents frost formation on the coils; compulsory in the heating mode, if the outdoor is below 0°C	30RQM/30RQP 160-520
Welded water exchanger connection kit	266	Victaulic piping connections with welded joints	Easy installation	30RQM/30RQP 160-520
230V electrical plug	284	230V AC power supply source provided with plug socket and transformer (180 VA, 0,8 Amps)	Permits connection of a laptop or an electrical device during unit commissioning or servicing	30RQM/30RQP 160-520
Expansion tank	293	6 bar expansion tank lintegrate in the hydraulic module (require option 116)	Easy and fast installation (plug & play),& Protection of closed water systems from excessive pressure	30RQM/30RQP 160-520

Features and advantages

Very economical operation

- High unit full and part load energy efficiency and efficient design of the water side:
  - Standardised Eurovent values in accordance with EN 14511-3:2013 EER up to 2.9 and ESEER up to 4.35 (30RQP version)
  - 30RQP and 30RQM ranges are compliant with EU Eco-design Tier 1 Minimum Efficiency Performance Standards (MEPS) in heating that apply from September 2015
  - 30RQP range and 30RQM sizes 430-470-520 are compliant with EU Eco-design Tier 2 MEPS in heating that apply from September 2017
  - Multiple scroll compressors equipped with a high-efficiency motor that permit exact matching of the capacity to the load
  - Electronic expansion device permitting operation at a lower condensing pressure and improved utilisation of the evaporator heat exchange surface (superheat control)
  - Air heat exchanger with Greenspeed® variable speed fans (30RQP version)
  - Low pressure drop brazed plate heat exchangers (pressure drops < 45 kPa at Eurovent conditions).
- Specific control functions to reduce unit energy use during occupied and unoccupied periods:
  - Internal time schedules clock: Permits heat pump on/off control and operation at a second set point
  - Automatic water set-point offset based on outside air temperature or room air temperature via an option
  - Floating high-pressure management
  - Variable-speed fan control
  - Cooling and heating demand limitation.

  Refer to control chapter for more information.
- Greenspeed® variable-speed pump to reduce pumping energy use up to 2/3 (option recommended by Carrier):
  - Elimination of the energy losses caused by the water flow control valve by the electronic setting of the nominal water flow
  - Energy savings during stand-by periods or part-load operation by automatic water pump speed reduction. Pump motor energy use varies as the cube of the speed so that only 40% speed reduction can reduce energy consumption by 80%
  - Improved unit part-load performance (Increased SCOP and SEER values with variable water flow following EN14825).

  Refer to hydronic option chapter for more information.

- Extra energy savings through partial heat recovery option that permits free hot water production.
- Reduced maintenance costs
  - Fast diagnosis of possible incidents and their history via the control
  - R-410A refrigerant is easier to use than other refrigerant blends.

Features and advantages

Low sound level

- Coil section with fixed speed fans (30RQM models):
  - Coils in V-shape with an open angle, allowing quieter air flow across the coil
  - Low-noise 4th generation Flying Bird fans, made of a composite material (Carrier patent)
  - Rigid fan installation for reduced noise (Carrier patent).
- Coil section with Greenspeed® variable-speed fans (30RQP models recommended by Carrier for even quieter operation):
  - Exceptional acoustic signature during part-load operation through smooth fan speed variation.
- Specific control functions or features to reduce noise level during night or unoccupied periods:
  - Night time sound control with capacity and fan speed limitation
  - Low-noise scroll compressors with low vibration level
  - The compressor assembly is installed on an independent chassis and supported by flexible anti-vibration mountings.
  - Dynamic suction and discharge piping support, minimising vibration transmission (Carrier patent)
  - Acoustic compressor enclosure, reducing radiated noise emissions (option).

Fast and easy installation

- Compact design
  - The AquaSnap units are designed to offer compact dimensions and low weight for easy installation.
- Integrated hydronic module (option)
  - Low or high-pressure water pump (as required)
  - Single or dual pump (as required) with operating time balancing and automatic changeover to the back-up pump if a fault develops
  - Water filter protecting the water pump against circulating debris
  - Pressure transducers for direct numerical display of the water flow rate and water pressures
  - Thermal insulation and frost protection down to -20 °C, using an electric resistance heater (option)
  - High-capacity membrane expansion tank (option).
- Integrated hydronic module with Greenspeed® variable-speed pump (option recommended by Carrier)
  - Easy and fast electronic setting of the nominal water flow at unit commissioning thus eliminating the water flow control valve adjustment
  - Automatic control of the pump speed based on constant speed, constant pressure difference or constant temperature difference.
- Simplified electrical connections
  - A single power supply point without neutral
  - Main disconnect switch with high trip capacity
  - 24 V control circuit without risk from a transformer included.
- Fast unit commissioning
  - Systematic factory test before shipment
  - Quick-test function for step-by-step verification of the instruments, electrical components and motor.

Reduced installation costs

- Optional Greenspeed® variable-speed pump with hydronic module (option recommended by Carrier)
  - Elimination of the water flow control valve cost
  - Water system design with variable primary flow (VPF) can provide significant installation cost savings compared with traditional constant primary-variable secondary systems; elimination of the secondary distribution pump, etc.
  - Water system design with fan coils fitted with 2-way valves instead of 3-way valves.

Environmental responsibility

- Non-ozone depleting R410A refrigerant
- Reduced direct warming potential (10% of total equivalent warming impact):
  - Low R410-A refrigerant charge
  - Leak-tight refrigerant circuit with minimum brazed refrigerant connections
  - Qualified Carrier service people for refrigerant servicing
  - ISO 14001 manufacturing site.
- Reduced indirect warming potential (90% of total equivalent warming impact):
  - Reduced unit energy use (high full- and part-load efficiency)
  - Pumping energy use can be reduced up to 2/3 using Greenspeed® variable-speed pump.

Superior reliability

- State-of-the-art concept
  - Two independent refrigerant circuits; the second one automatically takes over, if the first one develops a fault, maintaining partial cooling under all circumstances
  - All compressor components are easily accessible on site minimising down-time
  - V-coil design to protect the coils against hail impact
  - Optional anti-corrosion coil coating for use in moderately corrosive environments.
  - Electronic flow switch. Auto-setting according to cooler size and fluid type
- Auto-adaptive control
  - Control algorithm prevents excessive compressor cycling and permits reduction of the water quantity in the water loop (Carrier patent)
  - Automatic compressor unloading in case of abnormally high condensing pressure
  - Automatic fan speed adjustment in case of coil fouling (30RQP models)
  - Smooth fan start to increase unit lifetime (30RQP models).
  - ENERGY MANAGEMENT MODULE (p4 du PSD)
  - HYDRONIC MODULE (p6 du PSD)
  - VARIABLE WATER FLOW SYSTEM (p7 du PSD)
- Exceptional endurance tests
  - Partnerships with specialised laboratories and use of limit simulation tools (finite element calculation) for the design of critical components
  - Transport simulation test on an endurance circuit based on a military standard.

Controls

Touch Pilot control

The Touch Pilot features a control with advanced communication technology over Ethernet (IP), user-friendly and intuitive user interface with 5” colour touch screen.

- Energy management
  - Internal time schedule clock: Controls heat pump on/off times and operation at a second set-point
  - Set-point offset based on the outside air temperature
  - Master/slave control of two heat pumps operating in parallel with operating time equalisation and automatic change-over in case of a unit fault.
- Integrated advanced communication features
  - Night mode: Capacity and fan speed limitation for reduced noise level
  - With hydronic module: Water pressure display and water flow rate calculation
  - Easy and high-speed communication technology over Ethernet (IP) to a building management system
  - Access to multiple unit parameters.
- 5" Touch Pilot user interface

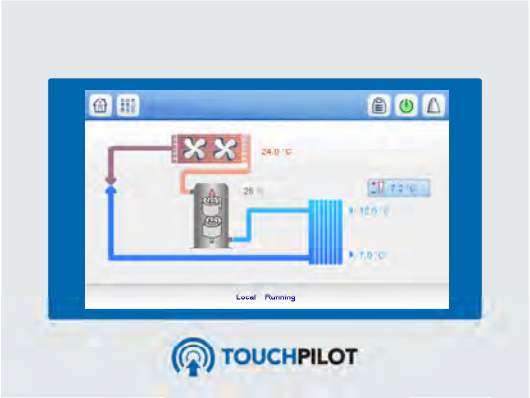

  - Intuitive and user-friendly 5 inch touch screen interface
  - Concise and clear information is available in local languages
  - Complete menu, customised for different users (end user, service personnel or Carrier engineers).

Remote management (standard)

Units with Touch Pilot control can be easily accessed from the internet, using a PC with an Ethernet connection. This makes remote control quick and easy and offers significant advantages for service operations.

The AquaSnap is equipped with an RS485 serial port that offers multiple remote control, monitoring and diagnostic possibilities. Carrier offers a vast choice of control products, specially designed to control, manage and supervise the operation of an air conditioning system. Please consult your Carrier representative for more information.

The AquaSnap also communicates with other building management systems via optional communication gateways.

A connection terminal allows remote control of the AquaSnap by wired cable:

- Start/stop: Opening of this contact will shut down the unit
- Dual set-point: Closing of this contact activates a second set-point (example: unoccupied mode).
- Demand limit: Closing of this contact limits the maximum heat pump capacity to a predefined value.
- Operation indication: This volt-free contact indicates that the heat pump is operating (cooling load).
- Alarm indication: This volt-free contact indicates the presence of a major fault that has led to the shut-down of one or several refrigerant circuits.

Operating limits

Operating range 30RQM/RQP 160-520 cooling mode

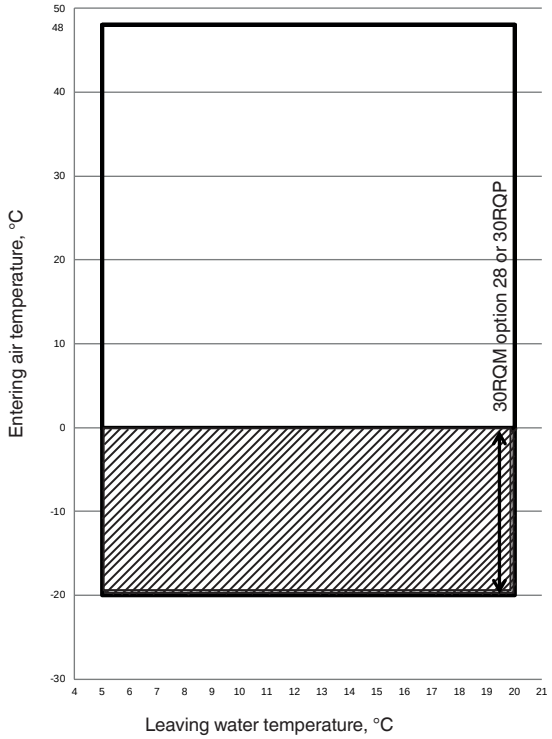

Operating range 30RQM/RQP 160-520 heating mode

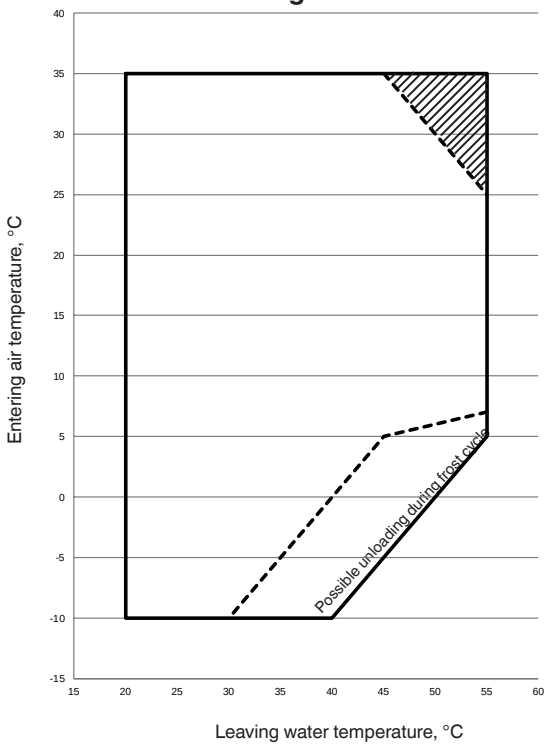

Notes:

1. Water heat exchanger ΔT = 5K.
2. The unit must either be equipped with the frost protection option for the water heat exchanger and the hydronic module (if used), or the water loop must be protected against frost by the installer, using an anti-freeze solution.
3. These ranges are given for illustrative purpose only. Verify the operating range with the Carrier electronic catalog.

Legend:

- Standard unit 30RQM or 30RQP operating at full load.
- Extension of the operating range in cooling mode : 30RQM unit equipped with option 28 or 30RQP unit. Water heat exchanger must be protected against frost (see note 2).
- Part-load operation of 30RQM/P size 310. Other sizes operate at full load.
- Part load operation. Possible unloading during frost cycle depending on the humidity conditions. Refer to the Carrier electronic catalog.

Unit operating limits

Units 30RQM/RQP 160-520 Cooling Mode			
Water heat exchanger		**Minimum**	**Maximum**
Entering water temperature at start-up	°C	8[1]	40
Leaving water temperature during operation	°C	5[2]	20[3]
Coil		**Minimum**	**Maximum**
Ambient operating temperature - 30RQM	°C	0[4][6]	48
Ambient operating temperature - 30RQM option 28 or 30RQP	°C	-20[4][6]	48
Available static pressure			
Standard unit (outdoor installation)	Pa	0	0

Units 30RQM/RQP 160-520 Heating Mode			
Water heat exchanger		**Minimum**	**Maximum**
Entering water temperature at start-up	°C	8[1]	50
Leaving water temperature during operation	°C	20	55
Coil		**Minimum**	**Maximum**
Ambient operating temperature	°C	-10[5][6]	35
Available static pressure			
Standard unit (outdoor installation)	Pa	0	0

(1) For application requiring operation at less than 8 °C, contact Carrier for unit selection using the Carrier electronic catalog.
(2) Use of antifreeze protection is required if the leaving water temperature is below 5 °C.
(3) For applications requiring operation above 20°C leaving water temperature, contact Carrier for the selection of the unit using Carrier electronic catalog.
(4) For operation from 0°C down to -20°C (cooling mode), heat pump must be a 30RQM unit equipped with option 28 "Winter operation" or must be a 30RQP unit.
(5) For operation from 0°C down to -10°C (heating mode), heat pump shall be equipped with option 252 "Coil defrost resistance heaters".
(6) For any operation below 0°C (cooling mode and heating mode), heat pump must be equipped with option 41 "Evaporator frost protection" (unit without hydraulic module) or with option 42A "Evaporator and hydraulic module frost protection" (unit with hydraulic module) or the water loop must be protected against frost using an anti-freeze solution.

Maximum ambient temperature: in case of 30RQM/30RQP units storage and transport, minimum and maximum ambient temperatures to respect are -20°C and +52°C. These temperature limits shall be considered in case of container shipment.

Available static system pressure

Data applicable for:

- Fresh water 20 °C
- Refer to the paragraph «Heat exchanger water flow rate» for maximum water flow values.
- In case of use of the glycol, the maximum water flow rate is reduced.

Units 30RQM/30RQP high-pressure pumps (fixed speed or variable speed at 50Hz)

Single pumps

Sizes 160-240

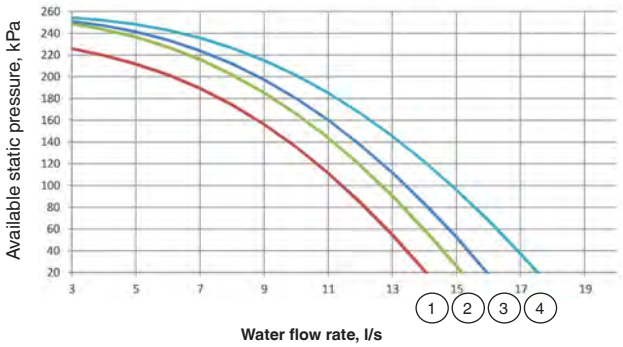

1 30RQM/30RQP 160-180
2 30RQM/30RQP 210
3 30RQM/30RQP 230
4 30RQM/30RQP 240

Sizes 270-520

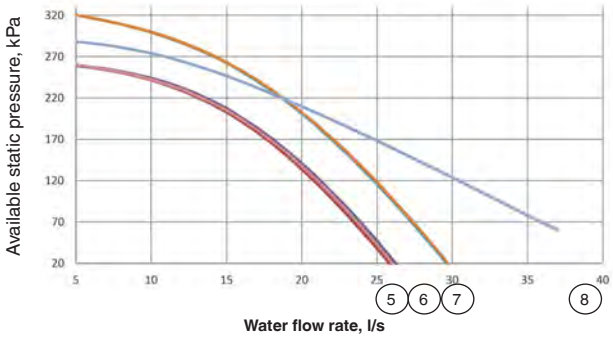

5 30RQM/30RQP 270-310
6 30RQM/30RQP 330-380
7 30RQM/30RQP 430-470
8 30RQM/30RQP 520

Dual pumps

Sizes 160-240

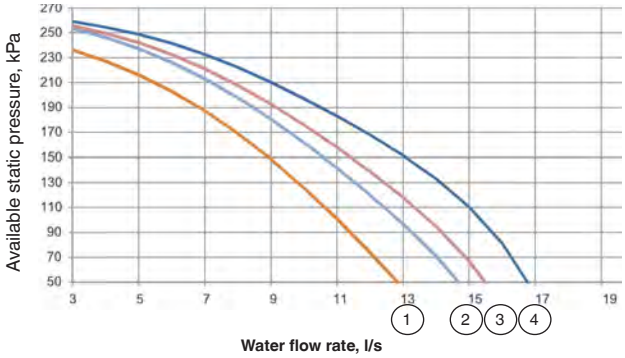

1 30RQM/30RQP 160-180
2 30RQM/30RQP 210
3 30RQM/30RQP 230
4 30RQM/30RQP 240

Sizes 270-520

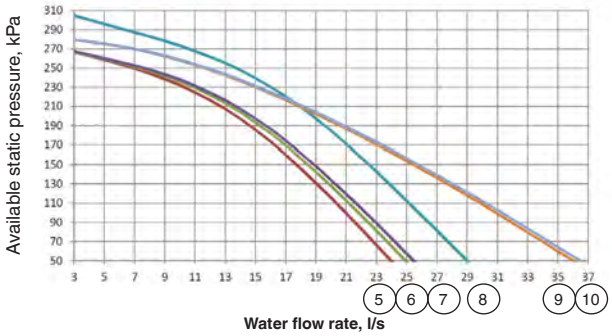

5 30RQM/30RQP 270
6 30RQM/30RQP 310
7 30RQM/30RQP 330
8 30RQM/30RQP 380-430
9 30RQM/30RQP 470
10 30RQM/30RQP 520

Available static system pressure

Data applicable for:

- Fresh water 20 °C
- Refer to the paragraph «Heat exchanger water flow rate» for maximum water flow values.
- In case of use of the glycol, the maximum water flow rate is reduced.

Units 30RQM/30RQP low-pressure pumps (fixed speed)

Single pumps

Sizes 160-270

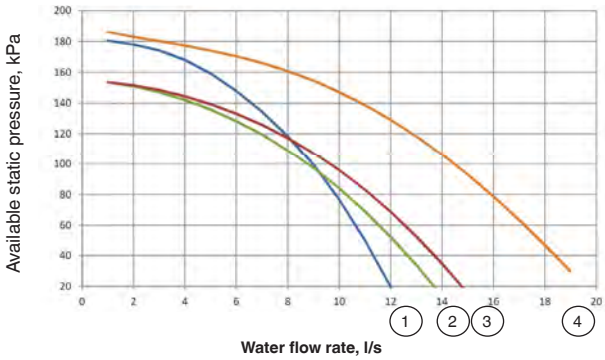

1 30RQM/30RQP 160-180
2 30RQM/30RQP 210
3 30RQM/30RQP 230
4 30RQM/30RQP 240-270

Sizes 310-520

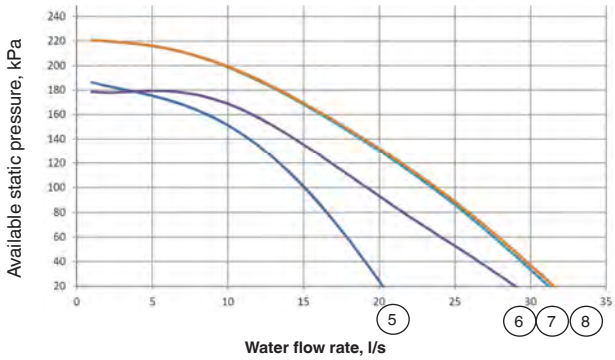

5 30RQM/30RQP 310
6 30RQM/30RQP 330-380-430
7 30RQM/30RQP 470
8 30RQM/30RQP 520

Dual pumps

Sizes 160-230

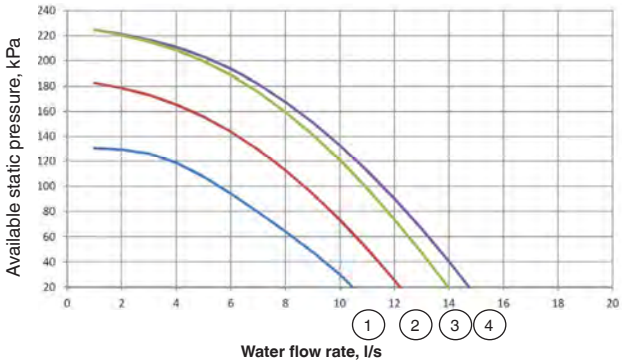

1 30RQM/30RQP 160
2 30RQM/30RQP 180
3 30RQM/30RQP 210
4 30RQM/30RQP 230

Sizes 240-520

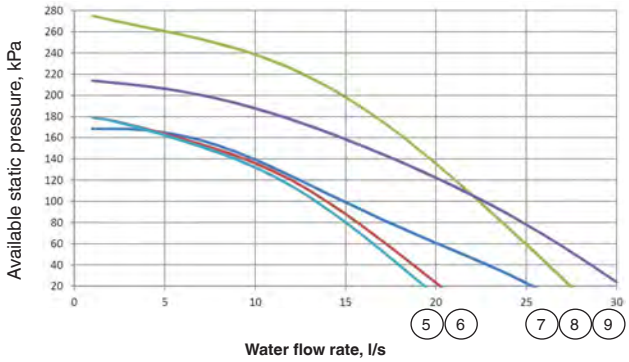

5 30RQM/30RQP 240-270
6 30RQM/30RQP 310
7 30RQM/30RQP 330-380-430
8 30RQM/30RQP 470
9 30RQM/30RQP 520

Dimensions/clearances

30RQM/30RQP 160-230 (with and without hydronic module)

Unit without hydronic module

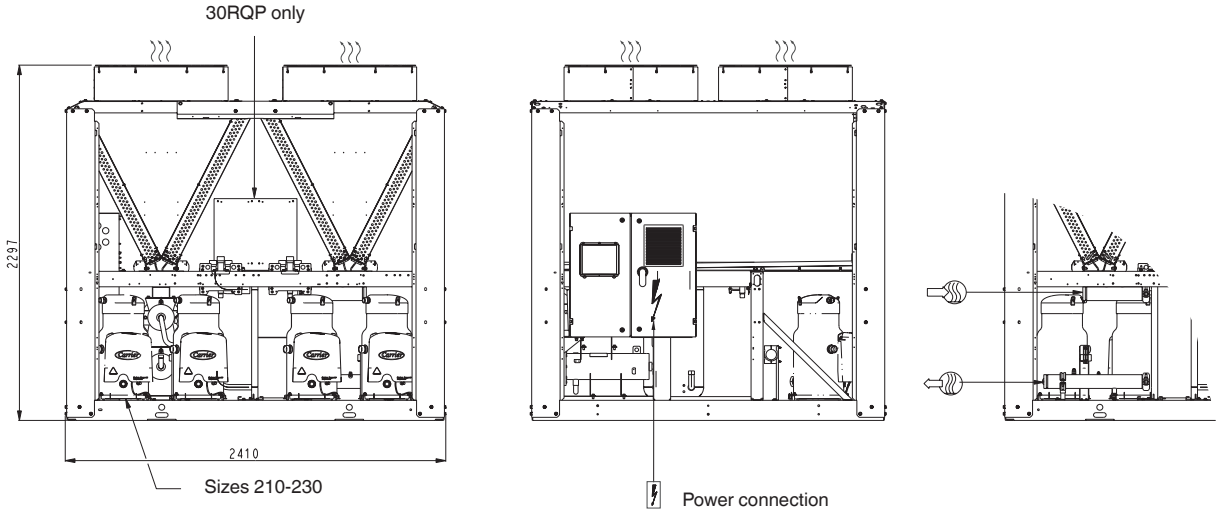

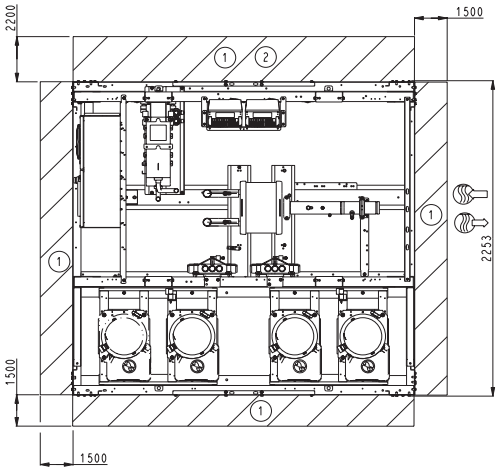

Legend:

All dimensions are in mm.

1 Clearances required for maintenance and air flow

2 Clearances required for removal of coil

Water inlet

Water outlet

Air outlet, do not obstruct

Control box

Note: Drawings are not contractually binding. Before designing an installation, consult the certified dimensional drawings, available on request.

For the positioning of the fixing points, weight distribution points and centre of gravity coordinates please refer to the dimensional drawings.

Unit with hydronic module

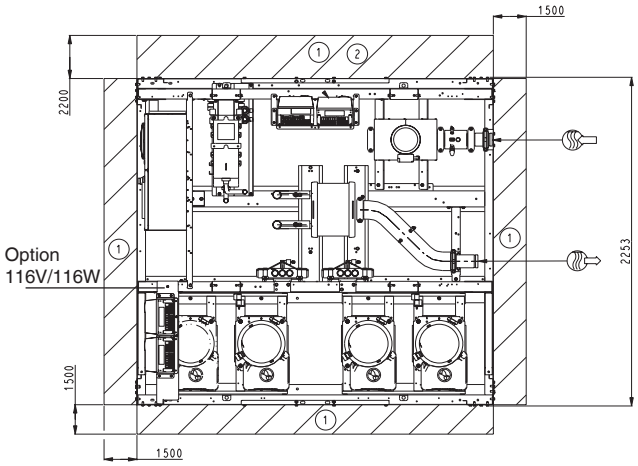

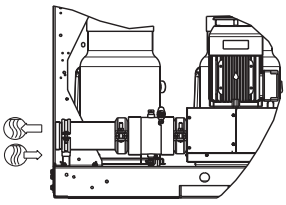

Dimensions/clearances

30RQM/30RQP 240-330 (with and without hydronic module)

Unit without hydronic module

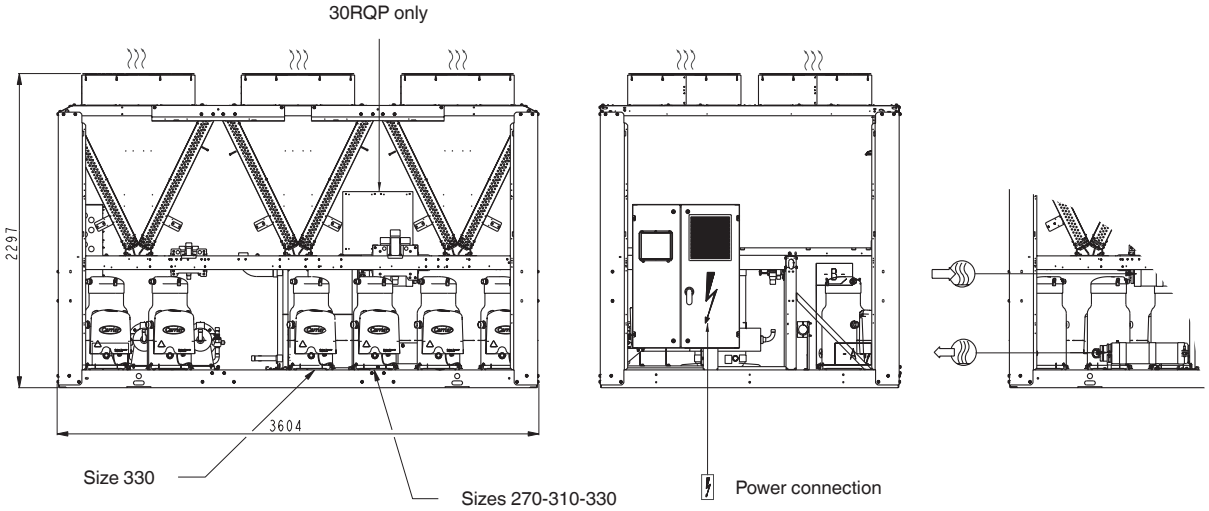

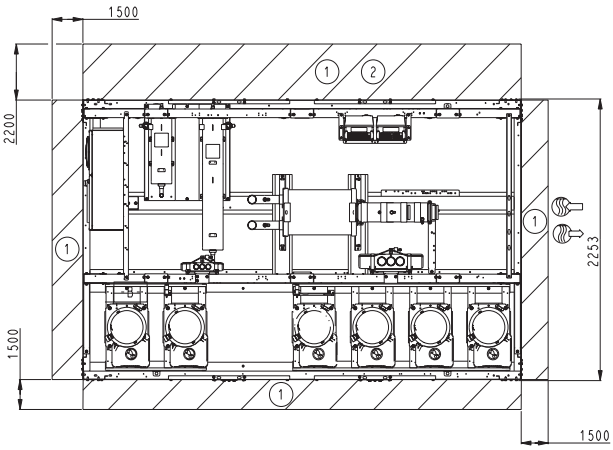

Legend:

All dimensions are in mm.

1 Clearances required for maintenance and air flow

2 Clearances required for removal of coil

Water inlet

Water outlet

Air outlet, do not obstruct

Control box

Note: Drawings are not contractually binding. Before designing an installation, consult the certified dimensional drawings, available on request.

For the positioning of the fixing points, weight distribution points and centre of gravity coordinates please refer to the dimensional drawings.

Unit with hydronic module

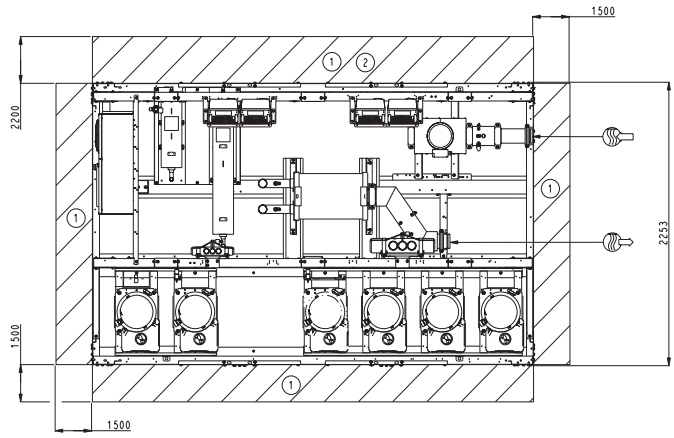

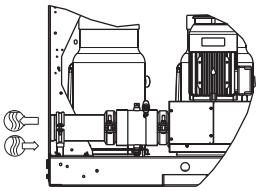

30RQM/30RQP 380-520 (with and without hydronic module)

Unit without hydronic module

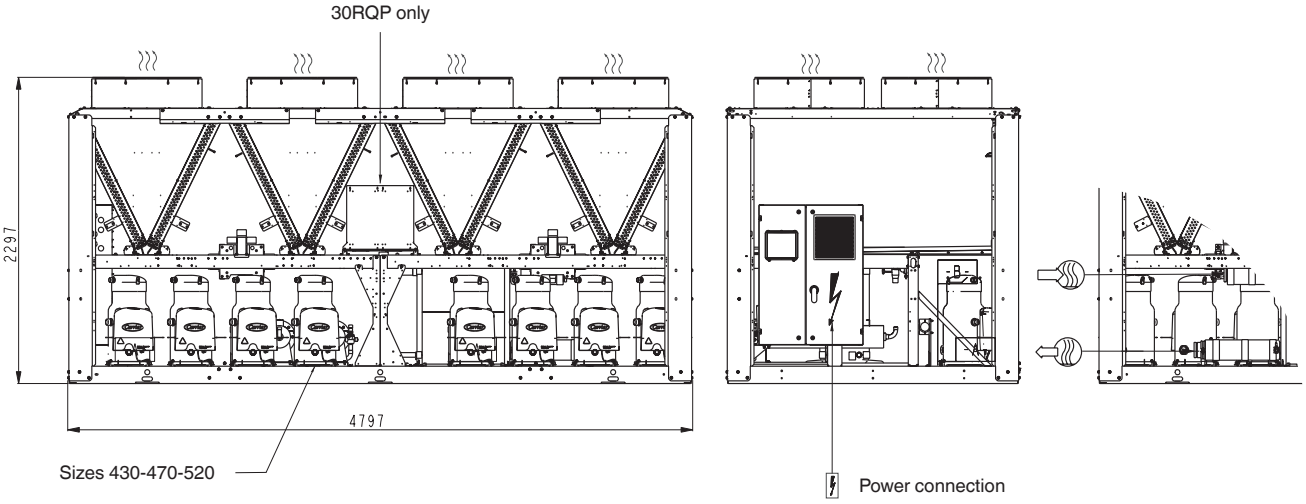

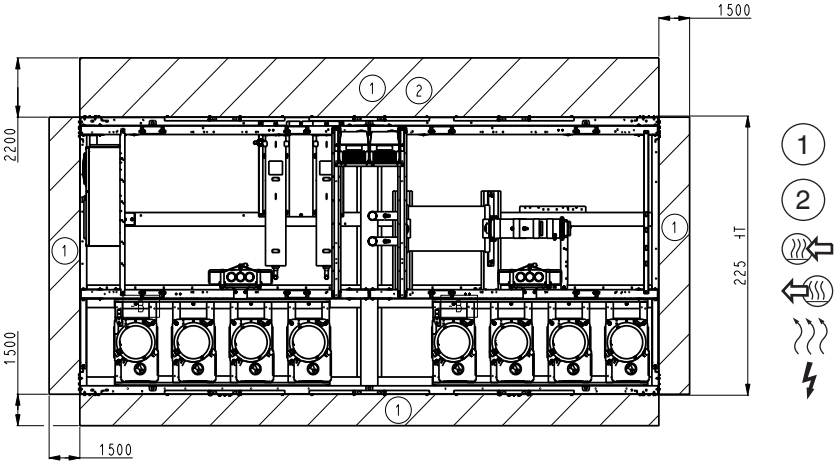

Legend:

All dimensions are in mm.

1 Clearances required for maintenance and air flow

2 Clearances required for removal of coil

Water inlet

Water outlet

Air outlet, do not obstruct

Control box

Note: Drawings are not contractually binding. Before designing an installation, consult the certified dimensional drawings, available on request.

For the positioning of the fixing points, weight distribution points and centre of gravity coordinates please refer to the dimensional drawings.

Unit with hydronic module

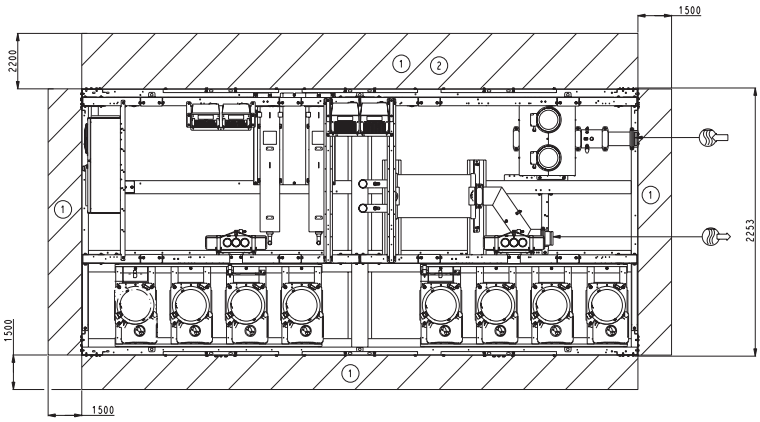

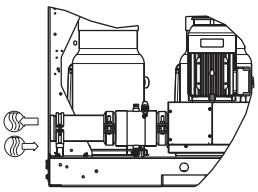

61WG

Nominal heating capacity 29-117 kW

HEATING

AQUASNAP Heating

61WG optimized for heating

Compact design

Plug and play approach

High efficiency

The 61WG units are new Carrier chillers and heat pumps designed for commercial (offices, small hotels, leisure facilities), residential and industrial applications. All units offer a unique combination of high performance and functionality in an exceptionally compact chassis.

61WG units are designed for high-temperature heating applications with hot water production possible up to 65 °C and a COP of above 5.

A large number of options is available for the whole range:

- Hydronic kits with or without variable water flow rate,
- Reinforced sound insulation,
- Stacking and connection of two units

Physical data

EUROVENT CERTIFIED PERFORMANCE
www.eurovent-certification.com

61WG				020	025	030	035	040	045	050	060	070	080	090
Heating														
Standard Unit	H1	Nominal capacity	kW	29.0	34.4	38.3	44.2	50.2	57.2	68.6	78.2	88.4	100.1	116.5
Full load performances*	H1	COP	kW/kW	5.42	5.29	5.21	5.29	5.34	5.32	5.49	5.36	5.46	5.28	5.33
	H1	Eurovent class heating		A	A	A	A	A	A	A	A	A	A	A
	H2	Nominal capacity	kW	21.7	25.7	29.4	34.1	37.7	42.1	50.4	56.7	67.0	74.6	87.0
	H2	COP	kW/kW	4.24	4.26	4.29	4.27	4.27	4.25	4.25	4.27	4.26	4.28	4.29
	H3	Nominal capacity	kW	27.7	33.0	36.7	42.7	48.7	54.8	66.4	75.7	84.1	95.3	109.0
	H3	COP	kW/kW	4.35	4.34	4.20	4.27	4.32	4.36	4.51	4.32	4.35	4.27	4.31
	H3	Eurovent class heating		B	B	B	B	B	B	A	B	B	B	B
	H4	Nominal capacity	kW	26.9	32.0	35.4	41.3	46.5	52.3	63.6	74.0	80.4	90.3	103.0
	H4	COP	kW/kW	3.65	3.68	3.52	3.59	3.56	3.66	3.75	3.64	3.63	3.56	3.60
	H5	Nominal capacity	kW	25.7	30.7	33.7	39.6	42.9	49.1	60.6	70.7	76.3	85.0	97.4
	H5	COP	kW/kW	2.96	2.96	2.86	2.93	2.88	2.96	2.98	3.04	2.99	2.94	2.97
Seasonal efficiency***	H1	SCOP	kW/kW	5.36	5.20	5.11	5.19	5.23	5.19	5.84	5.93	5.93	5.83	5.82
	H1	ηs heat	%	206	200	197	200	201	200	226	229	229	225	225
	H1	Prated	kW	34	41	45	53	60	68	81	93	105	119	139
	H4	SCOP	kW/kW	4.37	4.32	4.20	4.28	4.32	4.35	4.86	4.88	4.80	4.89	4.80
	H4	ηs heat	%	167	165	160	163	165	166	186	187	184	188	184
	H4	Prated	kW	32	38	42	49	56	63	76	88	97	109	124
Operating weight[1]			kg	191	200	200	207	212	220	386	392	403	413	441
Sound levels[2]														
Sound power level, standard unit			dB(A)	67.0	68.5	69.0	69.3	70.0	70.1	71.5	72.0	72.0	73.0	73.4
Sound power level with option 258			dB(A)	61.0	62.5	63.0	63.3	64.0	64.1	65.5	66.0	66.0	67.0	67.4
dimensions, standard unit[3]														
Width			mm	600	600	600	600	600	600	880	880	880	880	880
Length			mm	1044	1044	1044	1044	1044	1044	1474	1474	1474	1474	1474
Height			mm	901	901	901	901	901	901	901	901	901	901	901
Compressors				Hermetic scroll 48.3 r/s										
Quantity				1	1	1	1	1	1	2	2	2	2	2
Number of capacity stages				1	1	1	1	1	1	2	2	2	2	2
Minimum capacity			%	100	100	100	100	100	100	50	50	50	50	50
Refrigerant[1]														
Charge, standard unit			kg	3.5	3.5	3.6	3.7	4.0	4.6	7.6	7.8	7.9	8.7	11.5
			teqCO_2	7.2	7.3	7.4	7.6	8.2	9.5	15.9	16.3	16.5	18.2	24
Charge, unit with option 272			kg	2.7	2.9	2.9	3.0	3.2	3.9	7.2	7.3	7.4	7.6	10.5
			teqCO_2	5.6	6.0	6.1	6.3	6.7	8.1	14.9	15.2	15.5	15.9	21.9
Capacity control				Pro-Dialog+										
Evaporator				Direct-expansion plate heat exchanger										
Water volume			l	3.3	3.6	3.6	4.2	4.6	5.0	8.4	9.2	9.6	10.4	12.5
Water connections				Victaulic										
Inlet/outlet			in	1.5	1.5	1.5	1.5	1.5	1.5	2	2	2	2	2
Max. water-side operating pressure			kPa	1000	1000	1000	1000	1000	1000	1000	1000	1000	1000	1000
Condenser				Plate heat exchanger										
Net water volume			l	3.3	3.6	3.6	4.2	4.6	5.0	8.4	9.2	9.6	10.4	12.5
Water connections				Victaulic										
Inlet/outlet			in	1.5	1.5	1.5	1.5	1.5	1.5	2	2	2	2	2
Max. water-side operating pressure			kPa	1000	1000	1000	1000	1000	1000	1000	1000	1000	1000	1000
Chassis paint colour				Colour code: RAL7035										

* In accordance with standard EN14511-3:2013
** Not in accordance with standard EN14511-3:2013.These performances do not take into account the correction for the proportionnal heating capacity and power input generated by the water pump to overcome the internal pressure drop in the heat exchanger.
*** In accordance with standard EN14825:2013, average climate
H1 Heating mode conditions: evaporator entering/leaving water temperature 10 °C/7 °C, condenser entering/leaving water temperature 30 °C/35 °C, evaporator and condenser fouling factor 0 m^2 K/W.
H2 Heating mode conditions: evaporator entering/leaving water temperature 0 °C/-3 °C, condenser entering/leaving water temperature 30 °C/35 °C, evaporator and condenser fouling factor 0 m^2 K/W, evaporator fluid: 30%
H3 Heating mode conditions: evaporator entering/leaving water temperature 10 °C/7 °C, condenser entering/leaving water temperature 40 °C/45 °C, evaporator and condenser fouling factor 0 m^2 K/W.
H4 Heating mode conditions: evaporator entering/leaving water temperature 10 °C/7 °C, condenser entering/leaving water temperature 47 °C/55 °C, evaporator and condenser fouling factor 0 m^2 K/W.
H5 Heating mode conditions: evaporator entering/leaving water temperature 10 °C/7 °C, condenser entering/leaving water temperature 55 °C/65 °C, evaporator and condenser fouling factor 0 m^2 K/W.
(1) Weight shown is a guideline only. Please refer to the unit nameplate
(2) In dB ref=10^{-12} W, (A) weighting. Declared dualnumber noise emission values in accordance with ISO 4871 (with an associated uncertainty of +/-3dB(A)). Measured in accordance with ISO 9614-1 and certified by Eurovent.
(3) The dimensions shown are for the standard unit. For other unit types please refer to the dimensional drawings

Eurovent certified data

Electrical data

61WG		020	025	030	035	040	045	050	060	070	080	090
Power circuit												
Nominal power supply	V-ph-Hz	400-3-50 ± 10%										
Control circuit supply		24 V, via internal transformer										
Maximum start-up current draw (Un)*												
Standard unit	A	98	142	142	147	158	197	162	163	171	185	228
Unit with electronic starter option	A	53.9	78.1	78.1	80.9	86.9	108.4	98	99	105	114	139
Maximum operating power input**	kW	9.7	11.4	12.7	14.6	16.5	18.6	22.8	25.4	29.2	33	37.2
Maximum operating current draw (Un)***	A	16.1	19.6	21.1	24.4	26.7	30.9	39.2	42.2	48.8	53.4	61.8

* Maximum instantaneous start-up current at operating limit values (maximum operating current of the smallest compressor(s) + fan current + locked rotor current of the largest compressor).
** Maximum power input at the unit operating limits.
*** Maximum unit operating current at maximum unit power input and 400 V.

Options

Options	No.	Description	Advantages	Use 61WG
Soft starter	25	Electronic compressor starter	Reduced compressor start-up current	61WG 020-090
Master/slave operation	58	Unit equipped with an additional field-installed leaving water temperature sensor, allowing master/slave operation of two units connected in parallel.	Optimised operation of two units connected in parallel with operating time equalisation	61WG 020-090
External disconnect handle	70F	The handle of the electrical disconnect switch is on the outside of the unit	Quick access to the unit disconnect switch	61WG 020-090
Condenser insulation	86	Thermal condenser insulation	Optimisation for heating applications	61WG 020-090
LP single-pump, evap. side	116T	Evaporator hydronic module equipped with low pressure fixed-speed pump, drain valve, air vent and pressure sensors. Select option 293 for built-in safety hydraulic components.	Easy and fast installation	61WG 020-090
HP variable-speed single-pump, evap. side	116V	Evaporator hydronic module equipped with high-pressure variable-speed pump, drain valve, air vent and pressure sensors. Select option 293 for built-in safety hydraulic components.	Easy and fast installation, reduced power consumption of the pump	61WG 020-090
JBus gateway	148B	Two-directional communications board, complies with JBus protocol	Easy connection by communication bus to a building management system	61WG 020-090
BacNet gateway	148C	Two-directional communications board, complies with BacNet protocol	Easy connection by communication bus to a building management system	61WG 020-090
LON gateway	148D	Two-directional communications board, complies with Lon Talk protocol	Easy connection by communication bus to a building management system	61WG 020-090
Built-in DHW and space heating control	153	Control board factory-installed on the unit, control using weather compensation, control of supplementary electric heater (4 stages) or boiler, needle valve for domestic hot-water production with programmable time schedule.	Permits easy control of a basic heating system	61WG 020-090
Specific cooling control	154	Control box to be installed on the Carrier drycooler or remote condenser for communication with the unit via a bus.	Permits the use of an energy-efficient plug-and-play system	61WG 020-090
Low sound level	257	Compressor sound enclosure and sound insulation of main noise sources	Reduced sound emissions	61WG 020-090
Very low sound level	258	Enhanced sound insulation of main noise sources	Reduced sound emissions	61WG 020-090
Evaporator screw connection sleeves	264	Evaporator inlet/outlet screw connection sleeves	Allows unit connection to a screw connector	61WG 020-090
Condenser screw connection sleeves	265	Condenser inlet/outlet screw connection sleeves	Allows unit connection to a screw connector	61WG 020-090
Welded evaporator connection sleeves	266	Welded evaporator inlet/outlet connection sleeves	Allows welding of customer connections to the unit	61WG 020-090

Options	No.	Description	Advantages	Use 61WG
Welded condenser connection sleeves	267	Welded condenser inlet/outlet connection sleeves	Allows welding of customer connections to the unit	61WG 020-090
LP single-pump, cond.side	270T	Condenser hydronic module equipped with low pressure fixed-speed pump, drain valve, air vent and pressure sensors. Select option 293A for built-in safety hydraulic components.	Easy and fast installation	61WG 020-090
HP variable-speed single-pump, cond. side	270V	Condenser hydronic module equipped with high-pressure variable-speed pump, drain valve, air vent and pressure sensors. Select option 293A for built-in safety hydraulic components.	Easy and fast installation, reduced power consumption of the pump	61WG 020-090
High-temperature water production, condenser side, with glycol solution on the evaporator side	272	Condenser side water production up to 65 °C, with glycol solution on the evaporator side to -5 °C	Geothermal application and domestic hot-water production	61WG 020-090
Unit stackable for operation	273	Unit stackable for operation	Reduced footprint size	61WG 020-090
Customer water connection at the top of the unit	274	Customer water connection at the top of the unit	Reduced footprint size	61WG 020-090
Remote user interface	275	User interface for remote installation	Remote control of the unit and its operating parameters	61WG 020-090
Safety hydraulic components, evap. side	293	Screen filter, expansion tank and safety valve integrated in the evaporator hydronic module	Easy and fast installation, operating safety	61WG 020-090
Safety hydraulic components, cond. side	293A	Screen filter, expansion tank and safety valve integrated in the evaporator hydronic module	Easy and fast installation, operating safety	61WG 020-090

Accessories

Accessories	Description	Advantages	Use 61WG
00PPG000488000- Heating System Manager type A: It controls one heat emitter type with an auxiliary electric heater or boiler.	Additional control box not supplied with the unit, to be installed remotely	Heating system control facilitated	61WG 020-090
00PPG000488100- Heating System Manager type B: It controls two heat emitter types (or independent zones) and domestic hot water production with an auxiliary electric heater or boiler.	Additional control box not supplied with the unit, to be installed remotely	Heating system control facilitated	61WG 020-090
00PPG000488200- Heating System Manager type C: It controls two heat emitter types (or independent zones) and domestic hot water production with a district heating network as auxiliary source.	Additional control box not supplied with the unit, to be installed remotely	Heating system control facilitated	61WG 020-090

Hydronic module (options 116T, 270T)

Typical water piping diagram

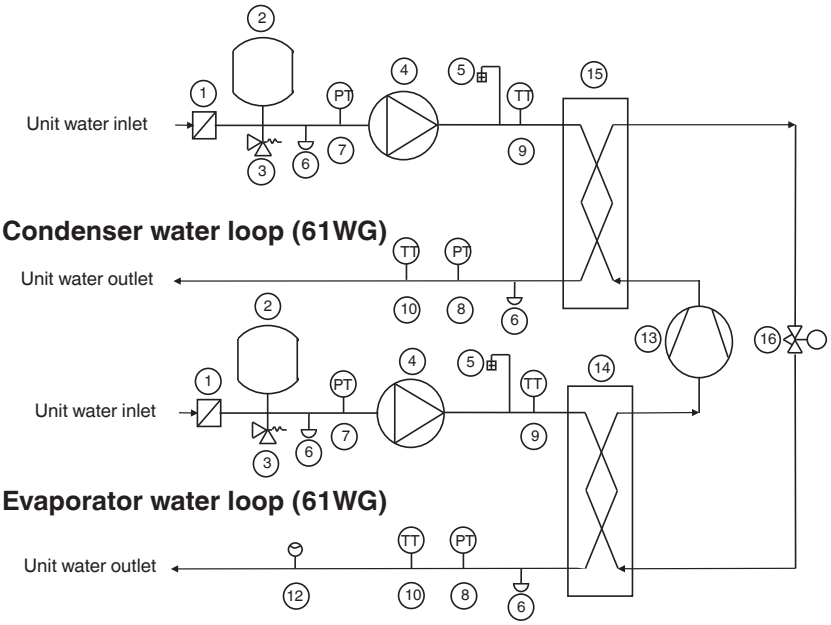

Components of unit and hydronic module

1 Victaulic screen filter (option 293 or 293A only)
2 Expansion tank (option 293 or 293A only)
3 Safety valve (option 293 or 293A only)
4 Water pump
5 Air vent
6 Water drain valve
7/8 Entering/leaving pressure sensor
9/10 Entering/leaving temperature probe
12 Flow switch 61WG option 272 (sizes 020-045 only)
13 Compressor
14 Evaporator
15 Condenser
16 Expansion device

Note: Units without hydronic module include a flow switch.

Physical data, units with hydronic module

61WG		020	025	030	035	040	045	050	060	070	080	090
Operating weight, 61WG (options 116V and 270V)*	kg	305	313	313	321	327	334	513	521	533	544	574
Height**	mm	1463	1463	1463	1463	1463	1463	1463	1463	1463	1463	1463
Hydronic module												
Maximum operating pressure	kPa	300	300	300	300	300	300	300	300	300	300	300
Water filter (max. removed particle diameter)	mm	1.2	1.2	1.2	1.2	1.2	1.2	1.2	1.2	1.2	1.2	1.2
Expansion tank capacity***	l	8	8	8	8	8	8	12	12	12	12	12
Water connections	in	1.5	1.5	1.5	1.5	1.5	1.5	2	2	2	2	2

* Weight shown is a guideline only.
** The length and width dimensions are the same as for the standard unit.
*** When delivered, the standard pre-inflation of the tanks is not necessary the optimal value for the system. To permit changing the water volume, change the inflation pressure to a pressure that is close to the static head of the system. Fill the system with water (purging the air) to a pressure value that is 10 to 20 kPa higher than the pressure in the tank.

Electrical data, options 116T, 270T

The original pumps that are factory-installed in these units have motors with efficiency class IE2. The additional electrical data required by regulation 640/2009 are given in the installation, operation and maintenance instructions.

This regulation regards the application of directive 2005/32/CE on the eco-design requirements for electric motors.

Pump curve, 61WG (options 116, 270)

Data applicable for:

- Fresh water 20 °C
- In case of use of the glycol, the maximum water flow is reduced
- The curves represented below are in normal conditions:
- leaving water on the back side of the unit (without option 274).

Fixed-speed low-pressure pumps (options 116T - 270T)

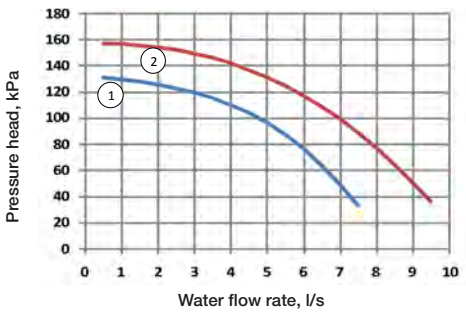

1 61WG-020-080 2 61WG 090

Variable-speed high-pressure pumps (options 116V - 270V)

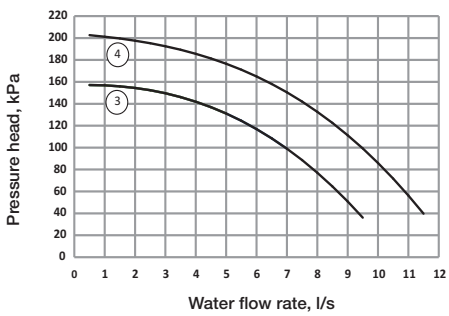

3 61WG 020-045 4 61WG 050-090

HEATING

Heating System Manager - 61WG units

This accessory allows improved integration of the 61WG heat pump to maximise the energy efficiency performance. With three system levels for nine typical configurations, most heating only applications are covered - from the simplest to the most complex, such as interfacing with a district heating system.

Each of these accessory configurations is described in detail the installation manual for this accessory:

- choice of additional control options (on/off volt-free contact or 0-10 V signal for increased performance),
- domestic hot water production temperature control and distribution.

The control box can supply all auxiliary devices such as the circulating pumps or the mixing or switching valves.

The heat pump is controlled by a CCN bus and the control box includes an NRCP2-BASE board, a ProDialog interface as well as all required sensors.

HSM control box

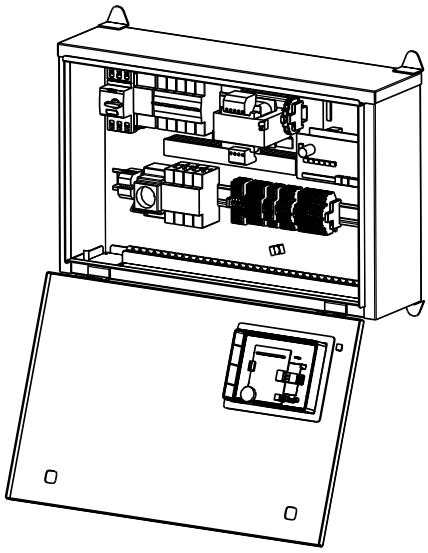

HSM control box dimensions

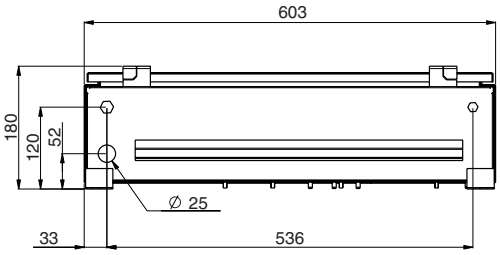

Installation safety notes

- The hydronic installation must be carried out by qualified personnel in accordance with applicable laws and following standard accepted practices.
- The hydronic installation must be regularly serviced.
- An incorrect hydronic installation that does not comply with the safety, electrical and thermal standards, as well as lacking/poor maintenance can lead to excessive pressures and cause piping breaks.

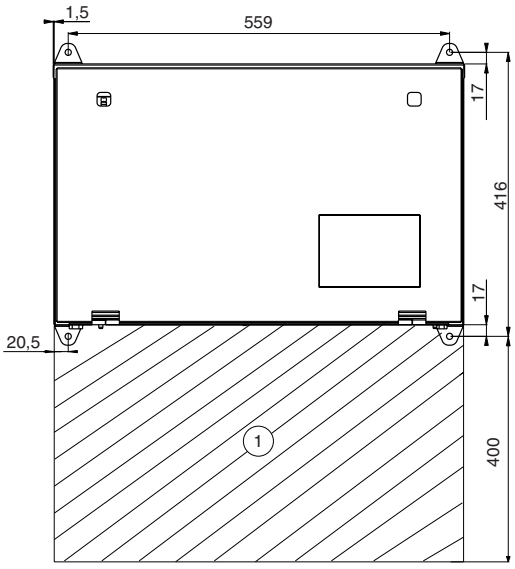

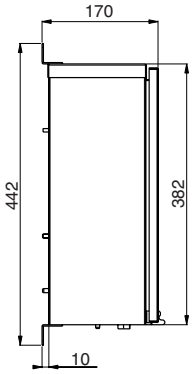

Legend:
All dimensions are in mm.

1 Clearance required to open the door and for customer connection

Accessory 00PPG000488000- Heating System Manager type A

- Heating System Manager: one heat emitter type with supplementary electric heater or boiler:
  - Allows control of a non-reversible heating system that includes a 61WG heat pump and a single heat emitter type or a single comfort zone. For optimised energy efficiency the heat pump is controlled by a configurable weather compensation system. The control box controls a supplementary electric heater or a standy-by boiler. The control box supplies power to the circulating pumps.

Heating system example: one heat emitter type with supplementary electric heating or stand-by boiler

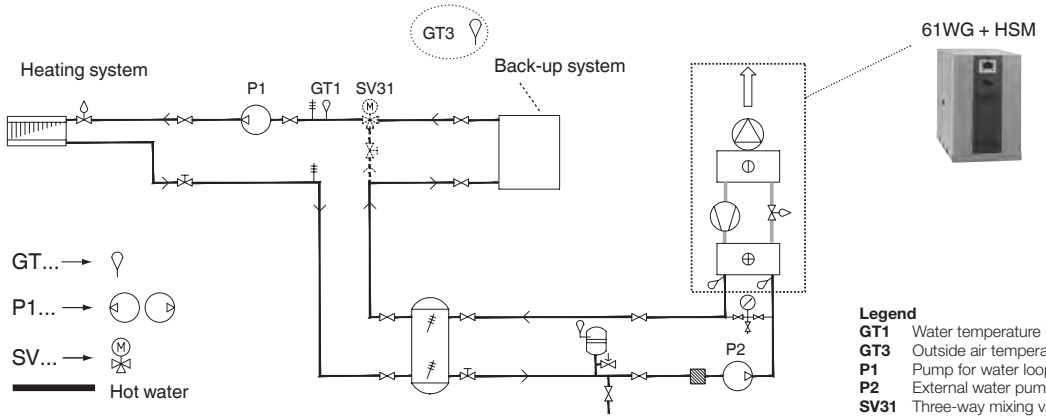

Legend
GT1 Water temperature loop 1
GT3 Outside air temperature
P1 Pump for water loop 1 (radiators)
P2 External water pump for the heat pump
SV31 Three-way mixing valve for the back-up heater

Accessory 00PPG000488100- Heating System Manager type B

- Heating System Manager (as accessory 00PPG000488000-) two heat emitter types or independent zones and domestic hot water production:
  - Allows control of a non-reversible heating system that includes a 61WG heat pump and two different heat emitter types and/or two independent comfort zones. For optimised energy efficiency the heat pump is controlled by a configurable weather compensation system. The control box controls a supplementary electric heater or a standy-by boiler. The control box supplies power to the circulating pumps. Hot-water production can be permanent or programmable with a second setpoint at the heat pump and control of a switching valve.

Heating system example: two heat emitter types or independent zones and domestic hot water production

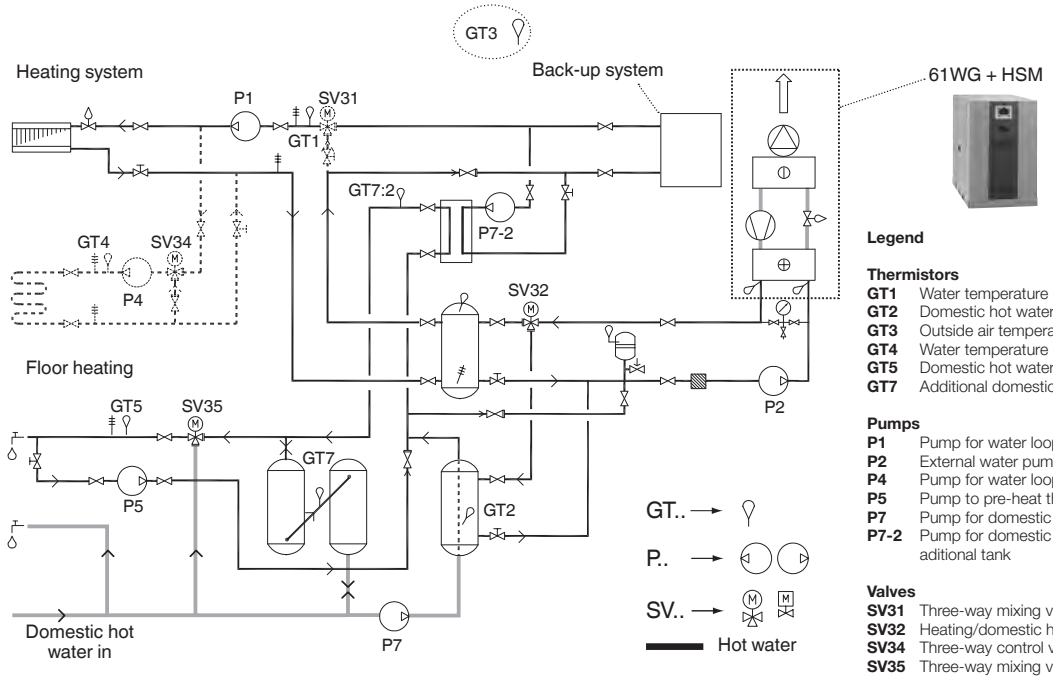

Legend

Thermistors
GT1 Water temperature loop 1
GT2 Domestic hot water tank temperature
GT3 Outside air temperature
GT4 Water temperature loop 2
GT5 Domestic hot water temperature
GT7 Additional domestic hot water tank temperature

Pumps
P1 Pump for water loop 1 (radiators)
P2 External water pump for the heat pump
P4 Pump for water loop 2 (floor heating)
P5 Pump to pre-heat the domestic hot water valve loop
P7 Pump for domestic hot water circulation
P7-2 Pump for domestic hot water circulation in an aditional tank

Valves
SV31 Three-way mixing valve for the back-up heater
SV32 Heating/domestic hot water change-over valve
SV34 Three-way control valve for water loop 2
SV35 Three-way mixing valve for domestic hot water

Notes:
- This application example includes two zones and a supplementary boiler and domestic hot-water production.
- The installation includes a switching valve (SV32) that allows switching from the heat pump capacity of the heating system to domestic hot-water production.
- The primary heating circuit is the domestic hot-water production circuit. It includes a tank with an equivalent pressure drop to simplify system balancing.

Accessory 00PPG000488200- Heating System Manager type C

- Heating System Manager (as accessory 00PPG000488100-) with the possibility to obtain additional heating and domestic hot-water production capacity from a district heating system:
  - Allows control of a non-reversible heating system that includes a 61WG heat pump and two different heat emitter types and/or two independent comfort zones. For optimised energy efficiency the heat pump is controlled by a configurable weather compensation system. The control box controls the heating and/or domestic hot-water production support from a district heating system. The control box supplies power to the circulating pumps. Hot-water production can be permanent or programmable with a second setpoint at the heat pump and control of a switching valve.

Heating system example: with the possibility to obtain additional heating and domestic hot-water production capacity from a district heating system

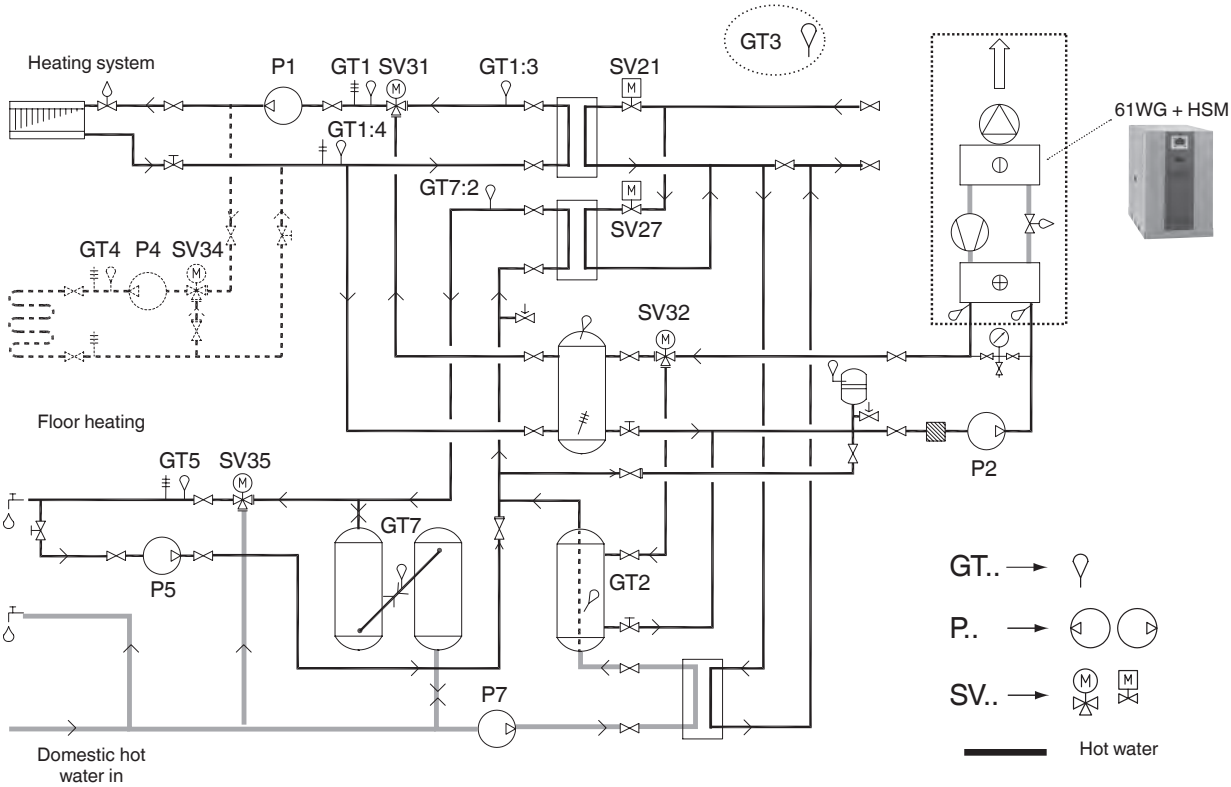

Legend

Thermistors
GT1 Water temperature loop 1
GT1:3 Heat exchanger leaving water temperature, district heating
GT1:4 Heat exchanger entering water temperature, district heating
GT2 Domestic hot water tank temperature
GT3 Outside air temperature
GT4 Water temperature loop 2
GT5 Domestic hot water temperature
GT7 Additional domestic hot water tank temperature
GT7:2 Back-up heat exchanger temperature for domestic hot water

Pumps
P1 Pump for water loop 1 (radiators)
P2 External water pump for the heat pump
P4 Pump for water loop 2 (floor heating)
P5 Pump to pre-heat the domestic hot water valve loop
P7 Pump for domestic hot water circulation

Valves
SV21 Valve for district heating heat exchanger for heating
SV27 Valve for district heating heat exchanger for domestic hot water
SV31 Three-way mixing valve for the back-up heater
SV32 Heating/domestic hot water change-over valve
SV34 Three-way control valve for water loop 2
SV35 Three-way mixing valve for domestic hot water

Variable water flow system (VWF)

Variable water flow is a hydronic control function package that permits control of the water flow rate.

The VWF not only ensures control at full load, a specific Carrier algorithm linked to an electronic frequency converter also continuously modulates the flow rate to minimise pump consumption at full load as well as part load.

The hydronic module includes pressure transducers that permit intelligent measurement of the water flow rate and real-time display on the Pro-Dialog+ interface. All adjustments can be made directly on the interface, speeding up start-up and maintenance.

As VWF acts directly on the pump, the system no longer requires the control valve at the unit outlet. However, for applications with two-way valves a bypass system must be kept to guarantee the minimum flow rate.

Operating logic

- Full-load setpoint
  The flow rate control at full load uses the Pro-Dialog+ interface, reducing the pump speed. This first control saves energy that would normally be dissipated in the control valve. For example, if the pressure supplied by the pump is reduced by 20% the power consumption of the pump is reduced by the same ratio, compared to a traditional installation.
- Operating mode at part load
  Pro-Dialog+ includes two part-load operating modes:
  - Constant outlet pressure control
  - Constant delta T control.

1 – Constant unit outlet pressure control

The control continuously acts on the pump speed to ensure a constant outlet pressure.

This solution is suitable for installations with two-way valves. When these close, the water speed will accelerate in the system branches that are still open. For a fixed-speed pump this results in an unnecessary increase of the pressure at the pump outlet.

The outlet pressure control mode ensures that each circuit branch always has a uniform supply, without unnecessary energy waste.

In industrial processes such as plastic injection moulding, this solution ensures that each terminal unit has the correct pressure supply.

2 – Constant delta T control

The VWF algorithm maintains a constant delta T no matter what the unit load, reducing the flow rate to the minimum.

This solution can be used for systems with two-way or three-way valves and achieves higher energy savings than the “Constant unit outlet pressure control” mode. It is suitable for the majority of comfort applications.

Features and advantages

Features

- Reduced footprint
- Scroll compressors and R-410A refrigerant
- Variable-flow pump
- Low-noise option (-3 dB(A))
- Stacking of two units for increased capacity
- Several communication protocols available: JBus, BacNet, MS/TP, LON
- Water connection at the top or rear

Available versions

61WG - optimised for heating

- High temperature up to +65 °C
- Evaporator temperature down to -5 °C
- Control of the three-way diverter valve for domestic hot water and space heating requirements
- System approach - the Heating System Manager maximises the global efficiency of complex systems where the 61WG units are combined with an auxiliary heating source to serve multi-zone space heating and domestic hot water production.

The right unit for any application

- The high temperature of the 61WG units makes them compatible with most heating systems, both in new and refurbished buildings and permits domestic hot water production (with a dedicated temperature setpoint).
- Option 153 “Built-in DHW and space heating control” allows control of both domestic hot water and space heating requirements:
  - Domestic hot water production: a built-in three-way valve is directed to divert the heat flow from the space heating loop to the domestic hot water loop and vice versa.
  - Space heating control: the setpoint is adjustable, based on the daily schedule or the outside air temperature (weather compensation function).
  - Control of auxiliary systems: if an alarm is detected at the 61WG or if there is insufficient heating capacity, a digital signal starts an auxiliary electric heater (1 to 4 stages) or boiler.
  - Pump control: allows control of the built-in pump as well as the pump in the secondary loop (to terminals).
- In 61WG units the Heating System Manager (HSM) accessory allows control of systems with several heat sources and different additional systems: electric heat, boiler or for the most complex systems district heating.

Adaptability and simple installation

- 61WG units can be provided with several hydronic kit options, both on the evaporator and/or condenser side, with different levels of available pressure and variable or fixed-speed pumps.
- If option 153 is selected domestic hot water production is controlled via a built-in three-way diverter valve (not supplied).
- 61WG units offer water-side cooling/heating reversibility.

Internal view of 61WG unit with hydronic kit

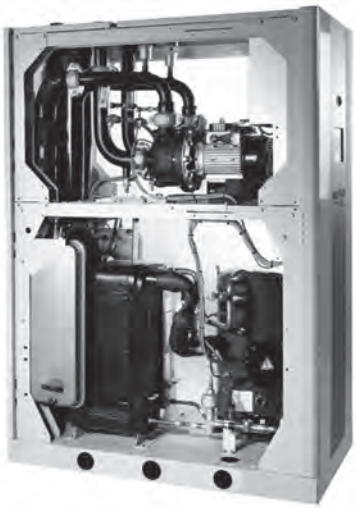

Water connections at the top of the unit

A compact high-performance product range

- Small footprint, ideal for refurbished buildings, allows access in very tight plant rooms.
- 61WG: A COP above 5 satisfies even the most stringent standards, with a leaving water temperature of up to 65 °C without supplementary system.
- Variable-flow pumps reduce system energy consumption.
- The entire range offers low sound levels, allowing installation in any building type. The low-noise option ensures enhanced acoustic comfort (-3 dB(A)).
- 61WG units are equipped with the latest generation R410A scroll compressor, optimised for typical operating conditions for water-sourced units.

Component acessibility

See photos below.

Access to scroll compressors

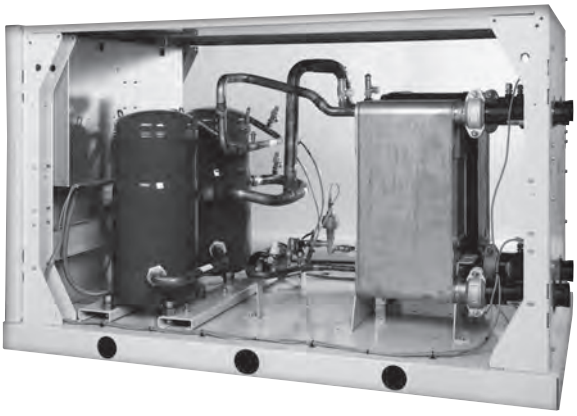

Access to control panel

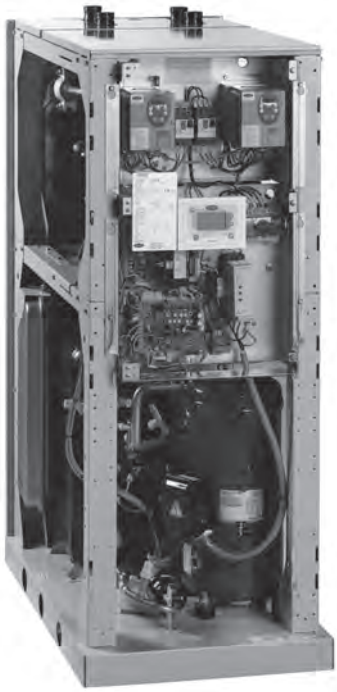

Two-unit stacking option for reduced footprint

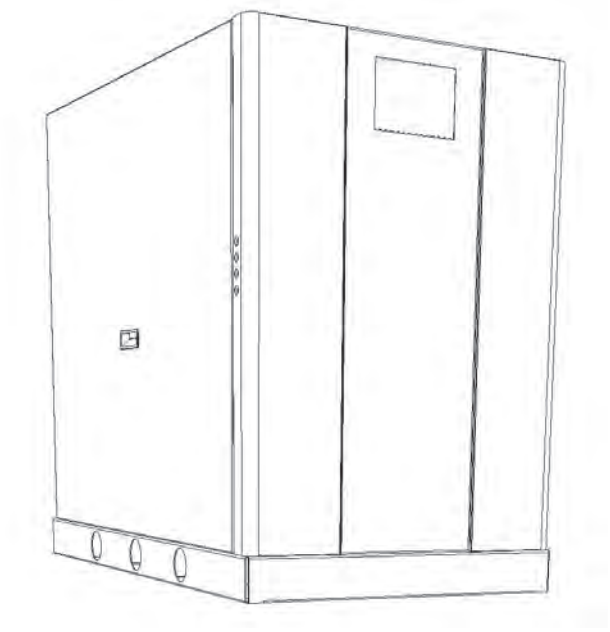

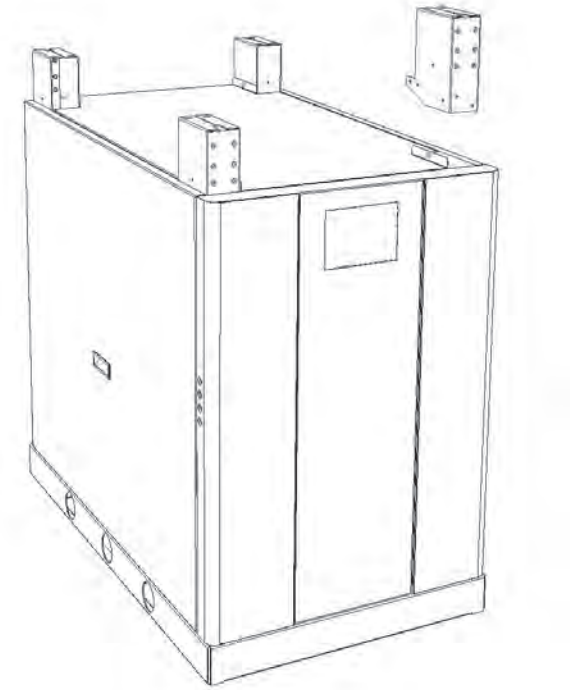

Controls

Pro-Dialog+ control

Pro-Dialog+ is a numerical control that combines intelligence with operating simplicity. Depending on the options used, the unit manages the operation of compressors, evaporaor and condenser water pumps and fans (drycooler)

■ Optimised energy management

- A patented auto-adaptive algorithm optimises the condensing pressure at part load to reduce compressor load and ensure perfect supply for the evaporator with liquid refrigerant. The algorithm controls the operation of the variable-speed condenser water pump and the fans (drycooler)
- Pro-Dialog+ automatically resets the chilled-water temperature setpoint based on the outside air temperature or the return water temperature. The control can also operate on a second setpoint (example: unoccupied mode).

Pro-Dialog+ interface

■ Total unit protection

- A patented auto-adaptive algorithm controls compressor operation and permanently adapts to the system charac-teristics (water loop inertia). Dangerous compressor cycling is prevented. The unit can operate safely with a low water volume, and this frequently makes a buffer tank unnecessary (see minimum water volume later in this document).
- Pro-Dialog+ permanently analyses the compressor suction and discharge pressures and temperatures. If an abnormal situation is detected, the control reacts, e.g. by reducing the capacity. As a result the compressors always operate in their ideal temperature range and many unit shut-downs due to a fault can be prevented.

Ease-of-use

- The Pro-Dialog+ interface includes five keys that permit navigation via intuitive tree-structure menus. Access to the information is very quick.
- This new backlit LCD interface includes control by a contrast potiometer for optimised visibility in all lighting conditions.
- The information is clearly displayed in English, French, German, Italian and Spanish (for other languages please consult Carrier Service).
- The Pro-Dialog+ navigation uses intuitive tree-structure menus, similar to the Internet navigators. The menus are user-friendly and permit quick access to the principal operating parameters: number of compressors operating, suction/discharge pressure, compressor operating hours, setpoint, temperatures.

Remote control option

Pro-Dialog+ permits control and monitoring of the unit using a wired interface:

- Start/stop
- Operating mode selection: cooling or heating
- Demand limit
- Dual setpoint
- User safety loop.

The control remotely reports any problem.

The CCN clock board connection offers other control possibilities:

Two independent time schedules to control:

- Unit start/stop
- Operation at a second chilled-water setpoint (for example: unoccupied mode)
- Operation of two units in parallel (master/slave function), and remote control via a communication bus (RS 485 serial port).

Operating limits

61WG		Minimum	Maximum
Evaporator			
Entering water temperature at start-up	°C	7.5*	27
Leaving water temperature during operation	°C	5**	20
Entering/leaving water temperature difference	K	2.5	7
Condenser			
Entering water temperature at start-up	°C	15***	60****
Leaving water temperature during operation	°C	20	65
Entering/leaving water temperature difference	K	2.5	18

* For entering water temperatures below 7.5 °C at start-up, contact Carrier.
** If the leaving water temperature is below 5 °C, a frost protection solution must be used. Please refer to option 6 for evaporator leaving water low-temperature applications (< 5 °C).
*** For applications with a condenser entering temperature below 15 °C the use of a three-way valve is recommended. This three-way valve can be controlled by the 0-10 V analogue output of the Pro-Dialog+ control.
**** For a water flow rate that corresponds to a maximum water-side temperature difference of 5 K.

61WG + option 272 (geothermal application)		Minimum	Maximum
Evaporator			
Entering water temperature at start-up	°C	-2.5*	25
Leaving water temperature during operation	°C	-5*	20
Entering/leaving water temperature difference	K	2.5	5
Condenser			
Entering water temperature at start-up	°C	15**	60***
Leaving water temperature during operation	°C	20	65
Entering/leaving water temperature difference	K	2.5	18

* A frost protection solution must be used.
** For applications with a condenser entering temperature below 15 °C the use of a three-way valve is recommended. This three-way valve can be controlled by the 0-10 V analogue output of the Pro-Dialog+ control.
*** For a water flow rate that corresponds to a maximum water-side temperature difference of 5 K.

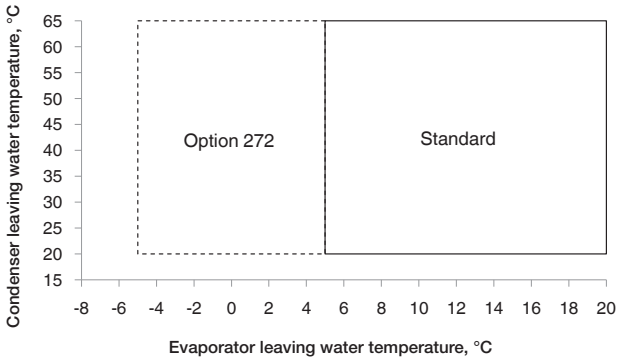

— 61WG standard unit
- - - 61WG unit with option 272 (brine to water)
Option 272: Condenser-side high-temperature water production, with glycol solution on the evaporator side

Plate heat exchanger pressure drop (includes internal piping)

Evaporator - standard unit without hydronic module - Water only

61WG 020-045

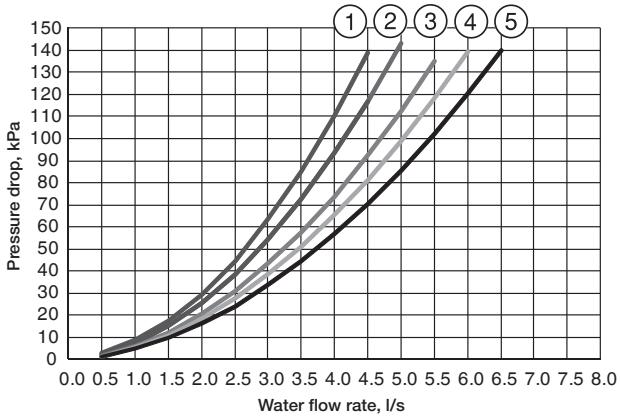

1 61WG 020
2 61WG 025 to 61WG 030
3 61WG 035
4 61WG 040
5 61WG 045

61WG 050-090

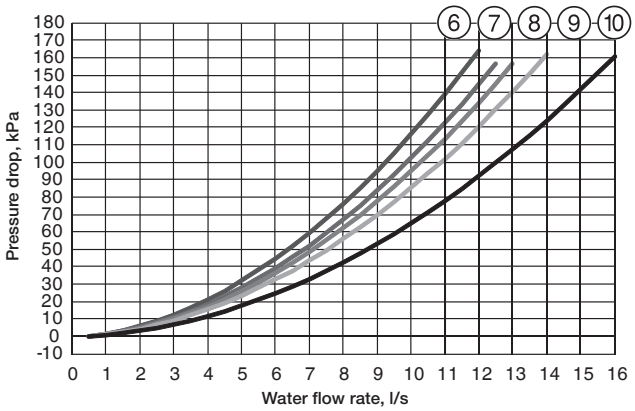

6 61WG 050
7 61WG 060
8 61WG 070
9 61WG 080
10 61WG 090

Condenser - standard unit without hydronic module - Water only

61WG 020-045

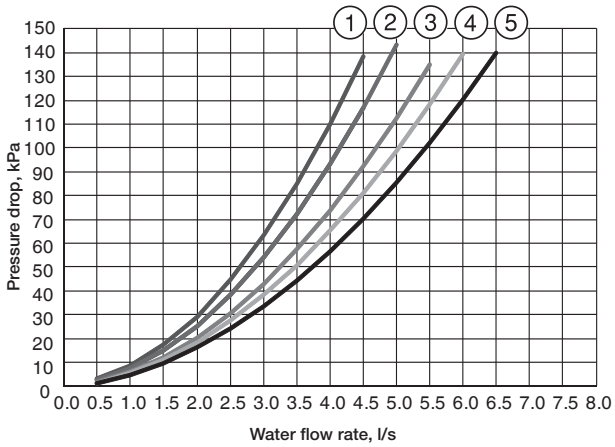

1 61WG 020
2 61WG 025 to 030
3 61WG 035
4 61WG 040
5 61WG 045

61WG 050-090

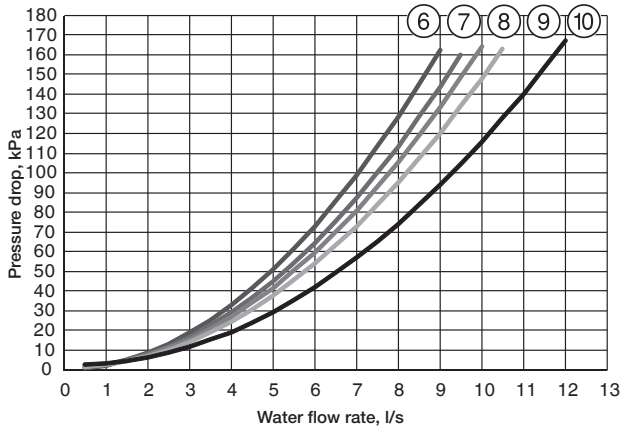

6 61WG 050
7 61WG 060
8 61WG 070
9 61WG 080
10 61WG 090

Available external static pressure, units with hydronic module (variable-speed high-pressure pumps)

Data applicable for:

- Fresh water (without antifreeze) 20 °C
- In case of use of the glycol, the maximum water flow is reduced
- The curves represented below are in normal conditions: leaving water on the back side of the unit (without option 274).

Evaporator

61WG 020-045

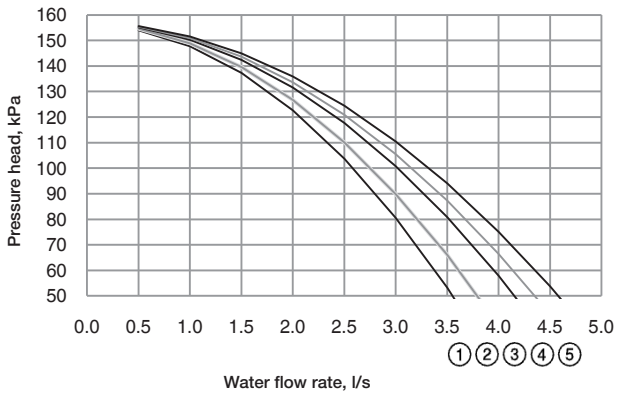

1 61WG 020
2 61WG 025 to 030
3 61WG 035
4 61WG 040
5 61WG 045

61WG 050-090

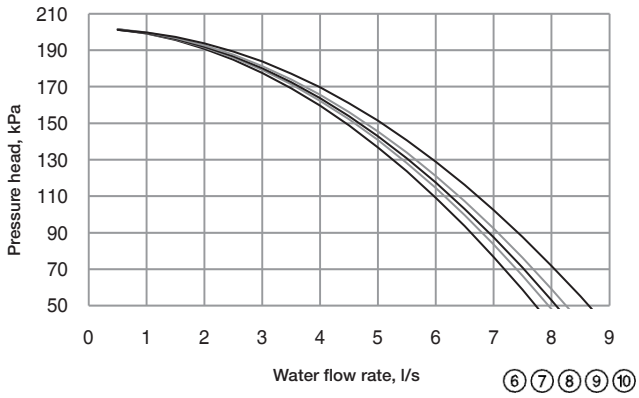

6 61WG 050
7 61WG 060
8 61WG 070
9 61WG 080
10 61WG 090

Condenser

61WG 020-045

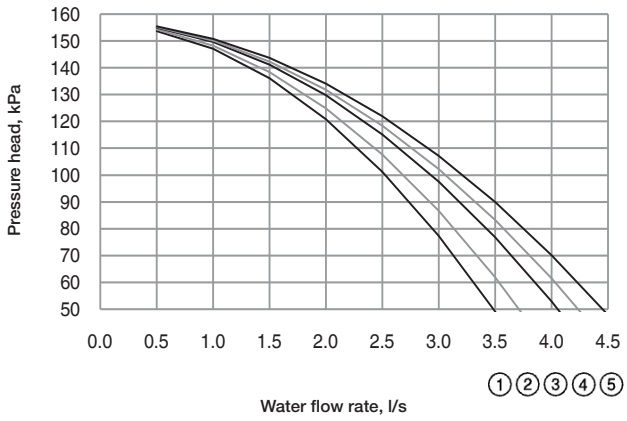

1 61WG 020
2 61WG 025 to 030
3 61WG 035
4 61WG 040
5 61WG 045

61WG 050-090

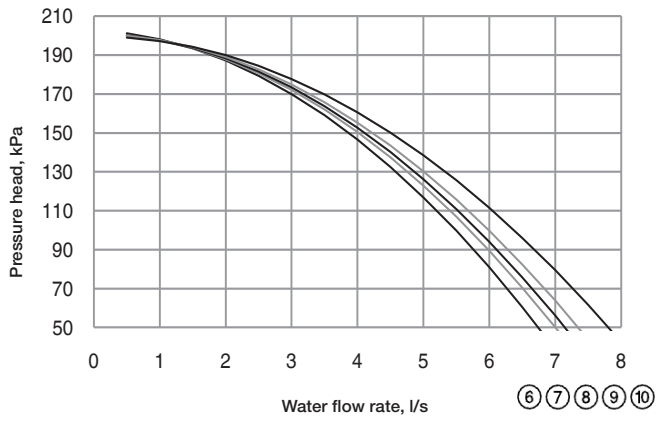

6 61WG 050
7 61WG 060
8 61WG 070
9 61WG 080
10 61WG 090

Available external static pressure, units with hydronic module (fixed-speed low-pressure pumps)

Data applicable for:

- Fresh water 20 °C
- In case of use of the glycol, the maximum water flow is reduced
- The curves represented below are in normal conditions: leaving water on the back side of the unit (without option 274).

Evaporator

61WG 020-045

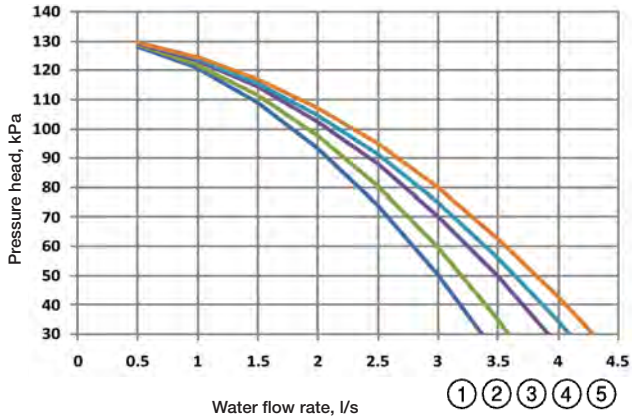

1 61WG 020
2 61WG 025 to 030
3 61WG 035
4 61WG 040
5 61WG 045

61WG 050-090

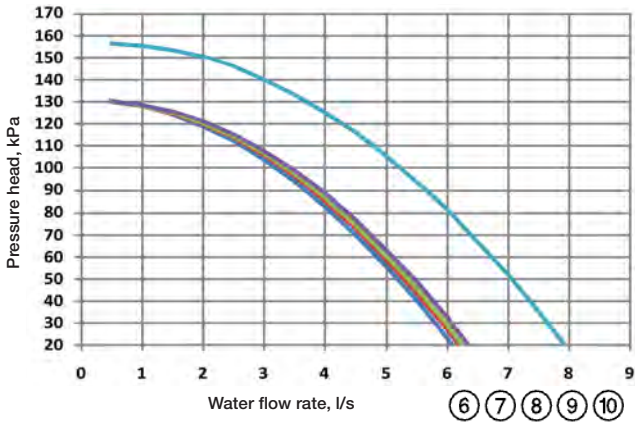

6 61WG 050
7 61WG 060
8 61WG 070
9 61WG 080
10 61WG 090

Condenser

61WG 020-045

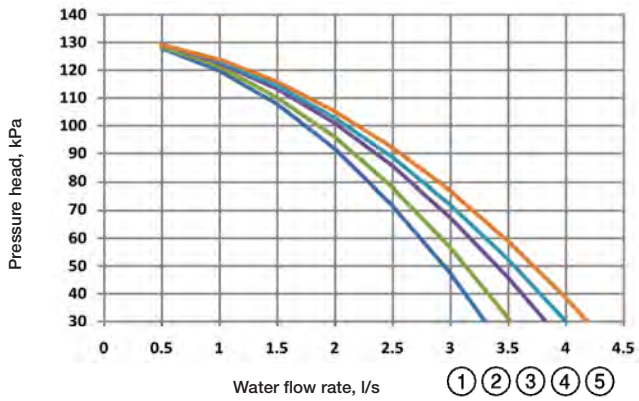

1 61WG 20
2 61WG 025 to 030
3 61WG 035
4 61WG 040
5 61WG 045

61WG 050-090

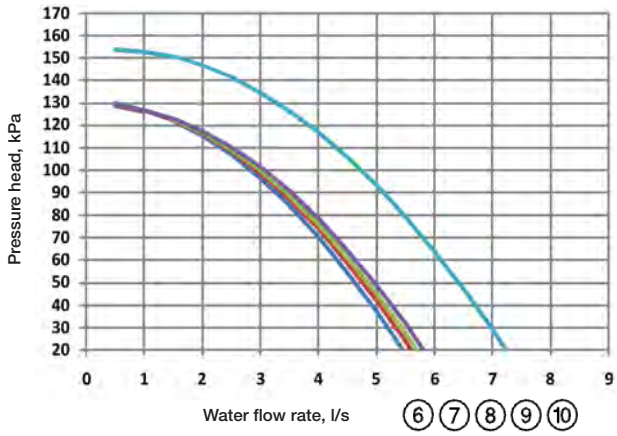

6 61WG 050
7 61WG 060
8 61WG 070
9 61WG 080
10 61WG 090

Dimensions/clearances

61WG 020-045 - standard unit

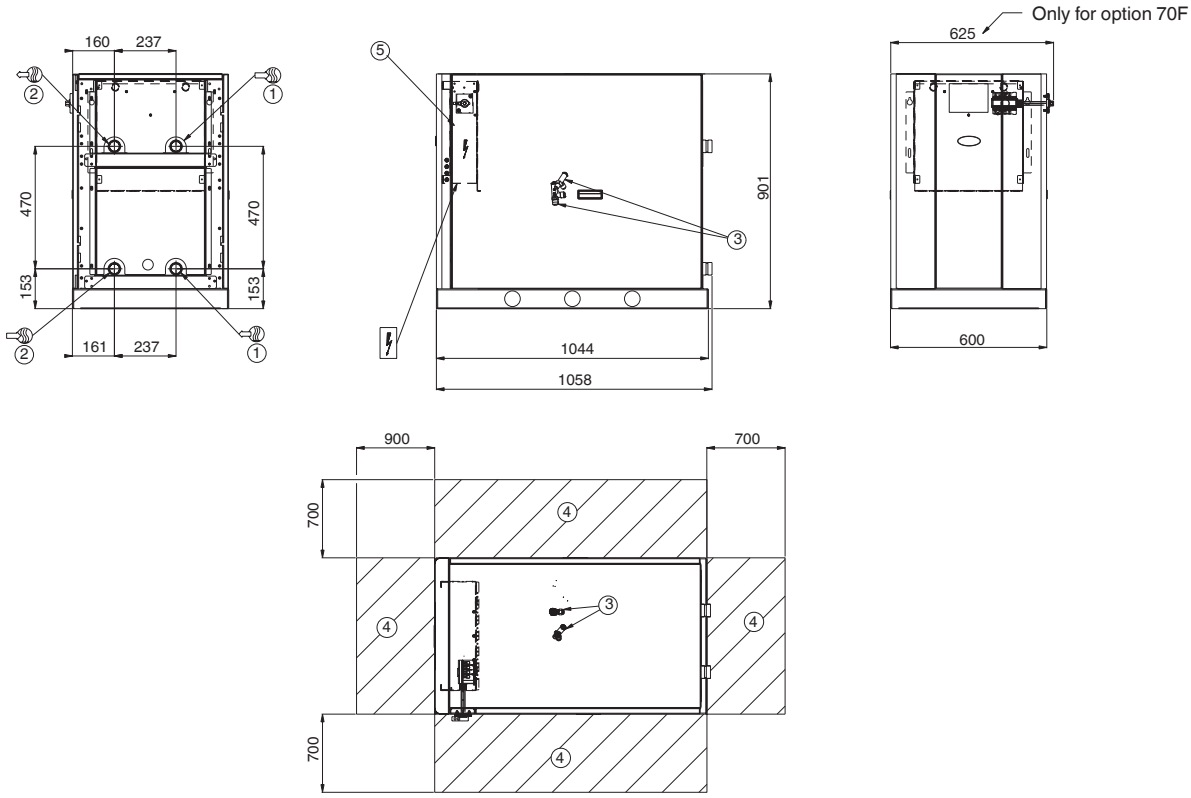

61WG 020-045 - unit with top connections (option 274)

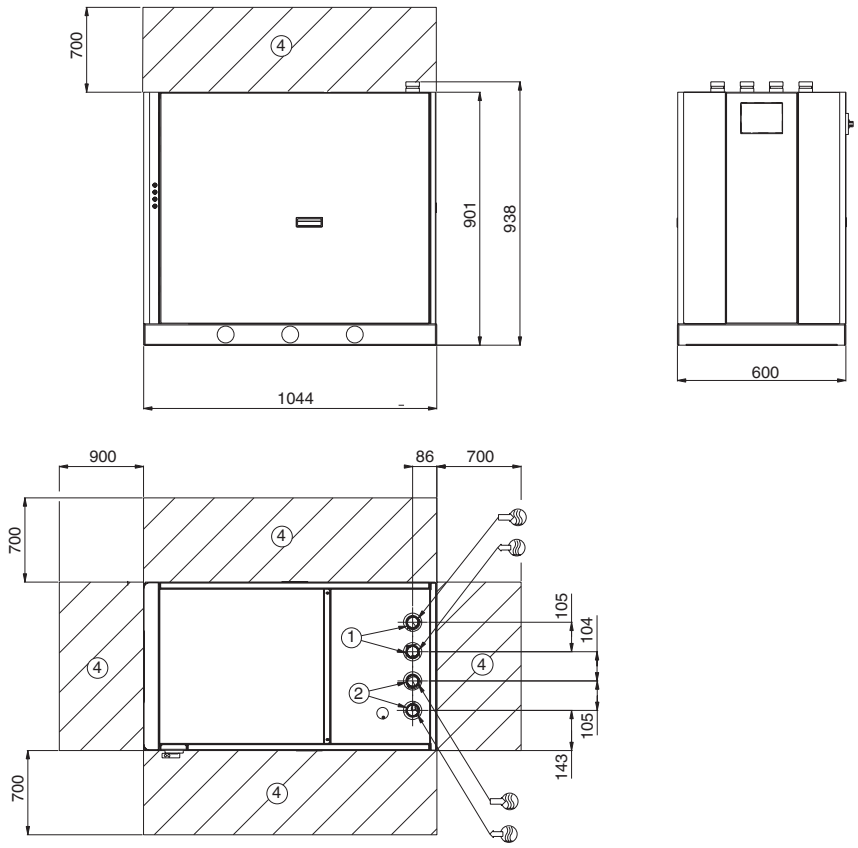

Legend:

All dimensions are in mm.

1. Evaporator
2. Condenser
3. Safety valve
4. Clearances required for maintenance (see note)
5. Control box

Water inlet

Water outlet

Power wiring connection

Note: Non-contractual drawings. Refer to the certified dimensional drawings available on request, when designing an installation.

61WG 020-045 - unit with evaporator hydronic module (option 116)

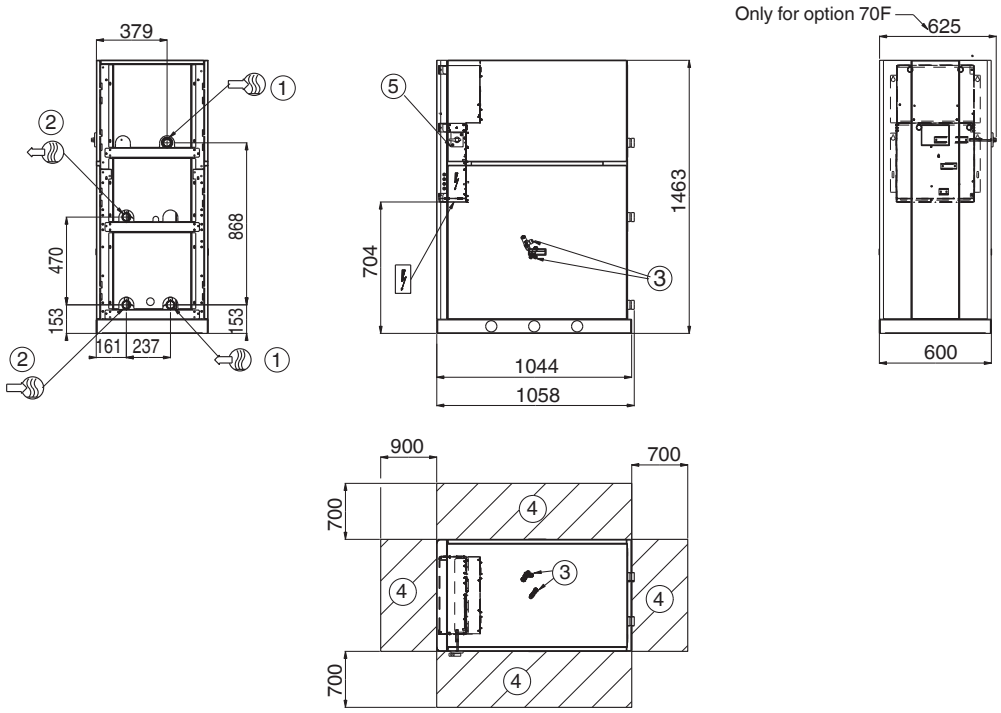

61WG 020-045 - unit with condenser hydronic module (option 270)

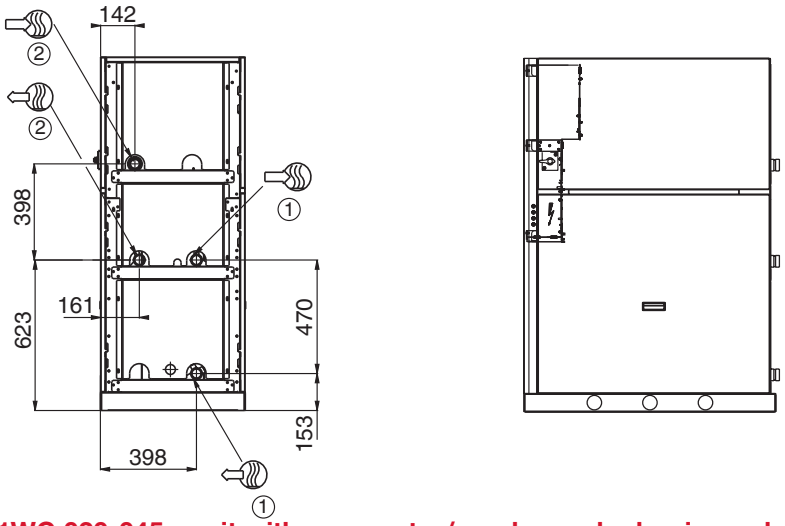

61WG 020-045 - unit with evaporator/condenser hydronic modules (options 116 + 270)

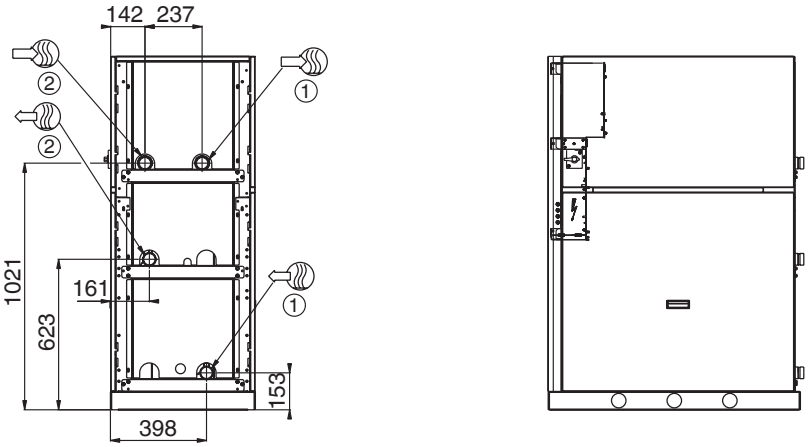

Legend:

All dimensions are in mm.

1. Evaporator
2. Condenser
3. Safety valve
4. Clearances required for maintenance (see note)
5. Control box

Water inlet

Water outlet

Power wiring connection

Note: Non-contractual drawings. Refer to the certified dimensional drawings available on request, when designing an installation.

61WG 020-045 - unit with hydronic module and top connections (options 116 + 274 or 270 + 274 or 116 + 270 + 274)

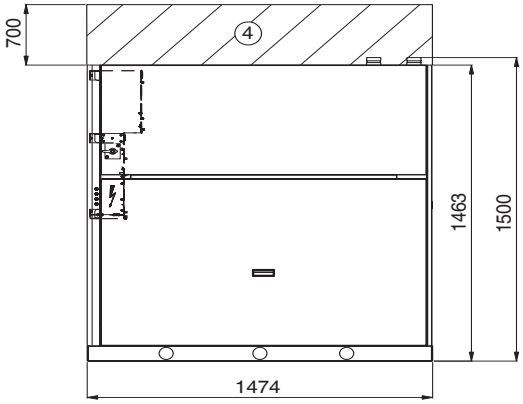

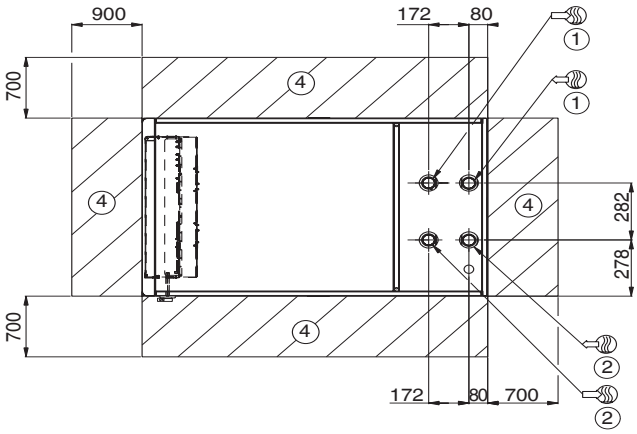

Legend:

All dimensions are in mm.

1. Evaporator
2. Condenser
3. Safety valve
4. Clearances required for maintenance (see note)
5. Control box

Water inlet

Water outlet

Power wiring connection

61WG 020-045 - stackable unit (option 273)

Note: The water and electrical connections are identical to those of the standard unit.

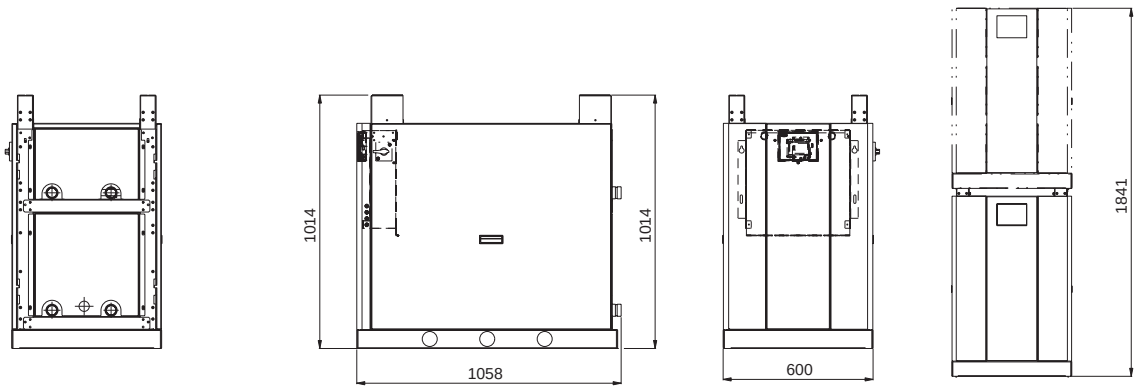

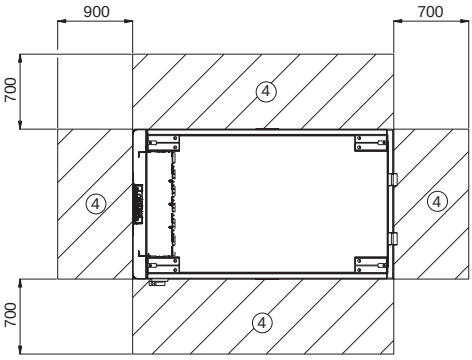

Note: Non-contractual drawings. Refer to the certified dimensional drawings available on request, when designing an installation.

61WG 050-090 - standard unit

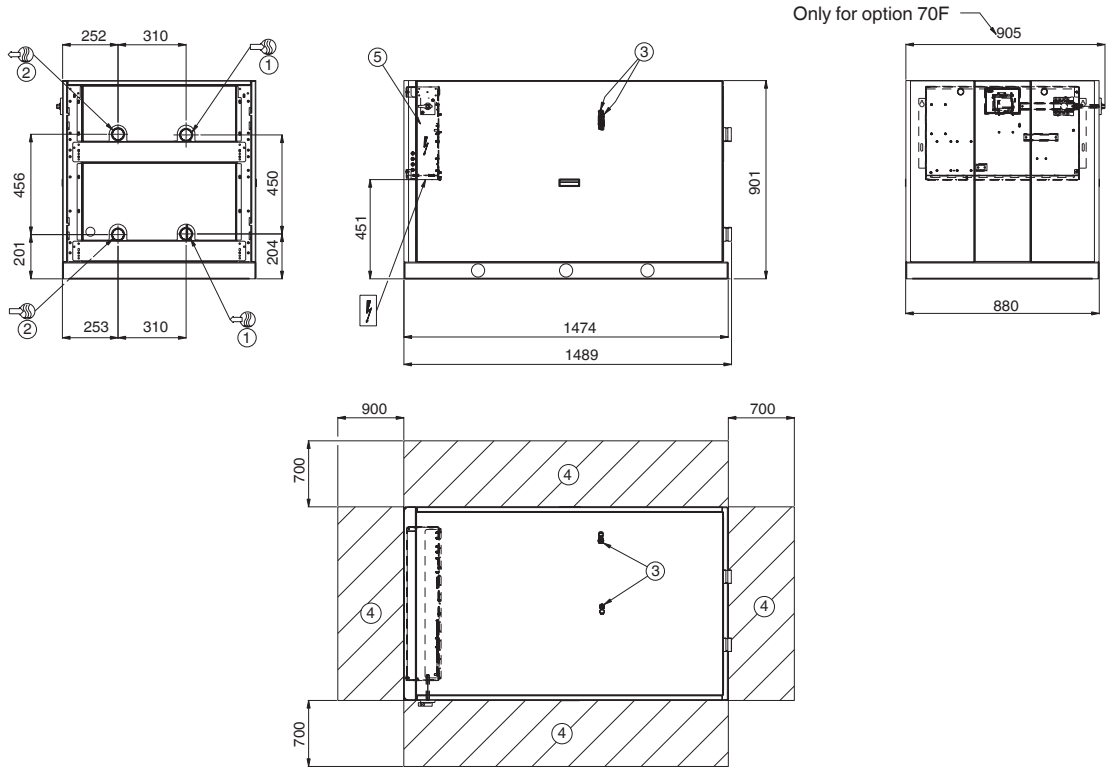

61WG 050-090 - unit with top connections (option 274)

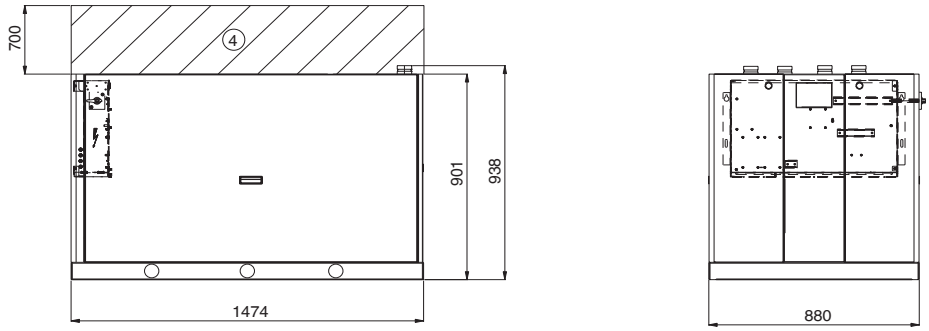

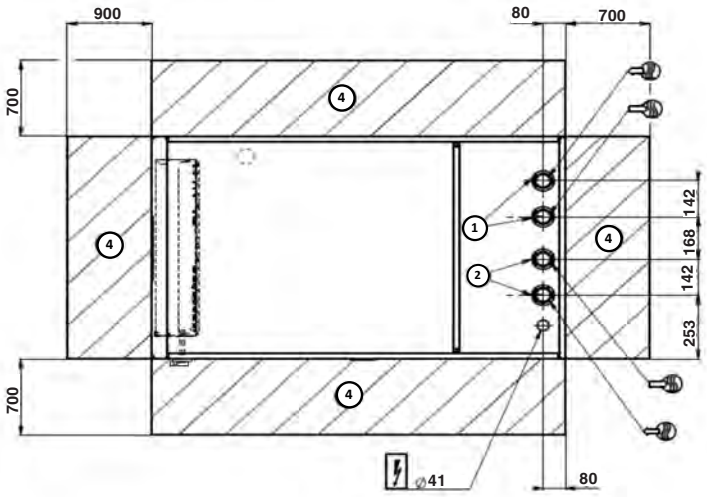

Legend:

All dimensions are in mm.

1. Evaporator
2. Condenser
3. Safety valve
4. Clearances required for maintenance (see note)
5. Control box

Water inlet

Water outlet

Power wiring connection

Note: Non-contractual drawings. Refer to the certified dimensional drawings available on request, when designing an installation.

61WG 050-090 - unit with evaporator hydronic module (option 116)

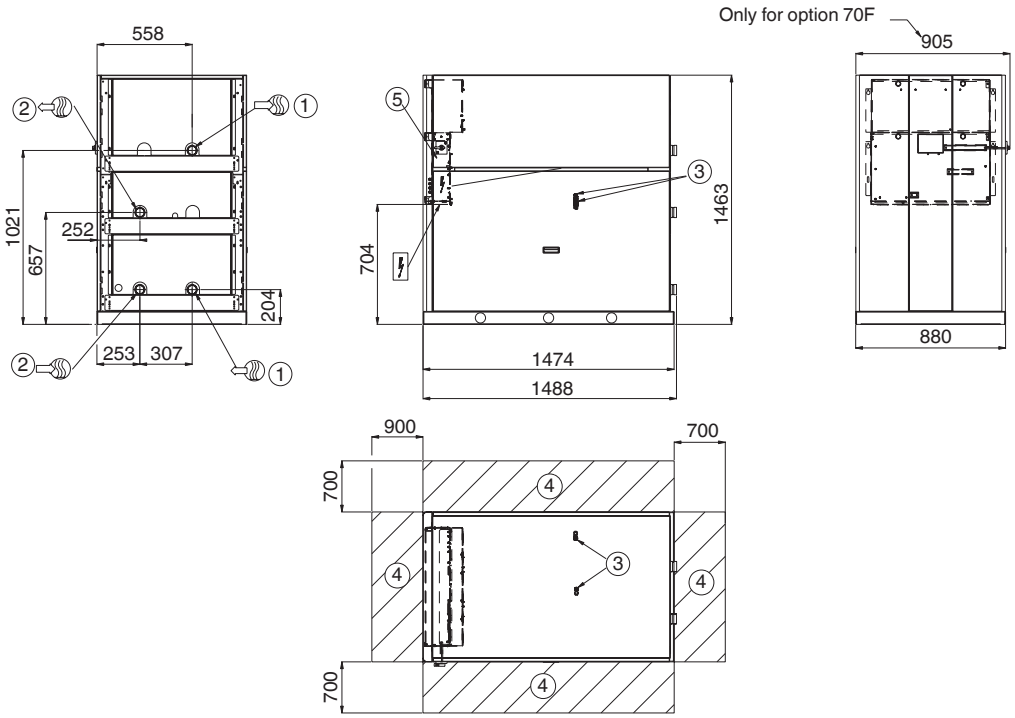

61WG 050-090 - unit with condenser hydronic module (option 270)

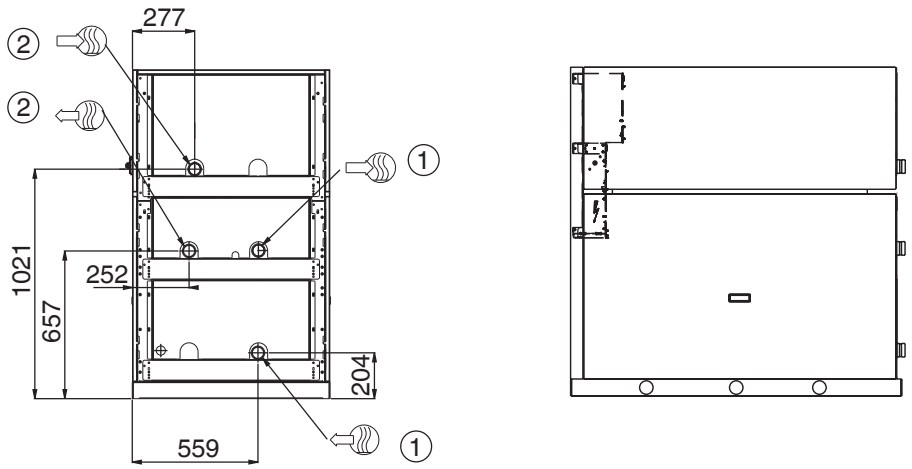

61WG 050-090 - unit with evaporator/condenser hydronic modules (options 116 + 270)

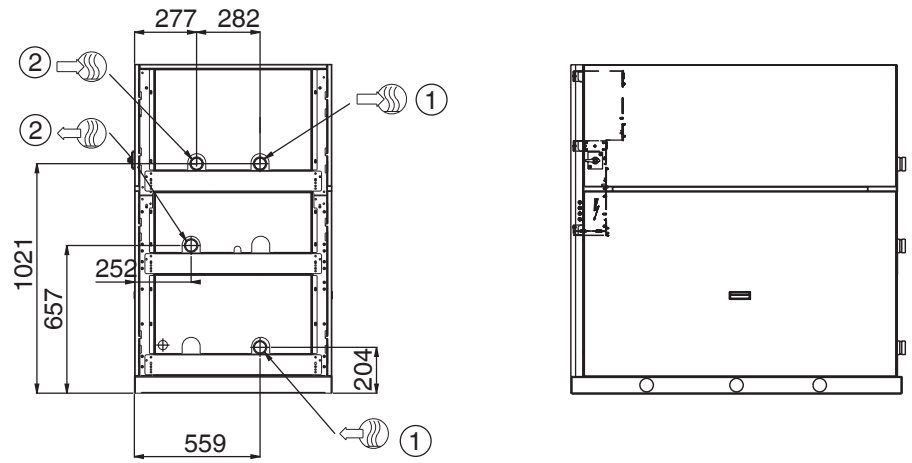

Legend:

All dimensions are in mm.

1. Evaporator
2. Condenser
3. Safety valve
4. Clearances required for maintenance (see note)
5. Control box

Water inlet

Water outlet

Power wiring connection

Note: Non-contractual drawings. Refer to the certified dimensional drawings available on request, when designing an installation.

61WG 050-090 - unit with hydronic module and top connections (options 116 + 274 or 270 + 274 or 116 + 270 + 274)

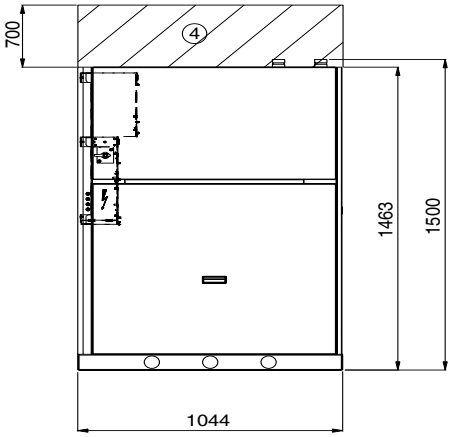

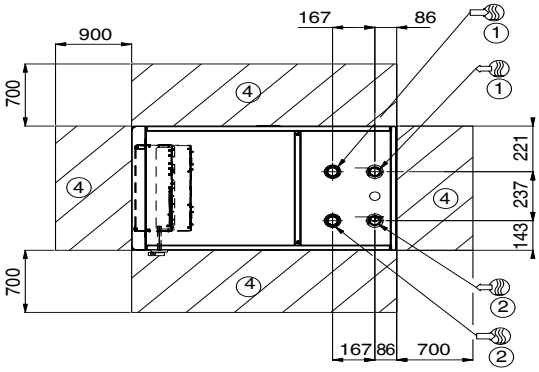

61WG 050-090 - stackable unit (option 273)

Note: The water and electrical connections are identical to those of the standard unit.

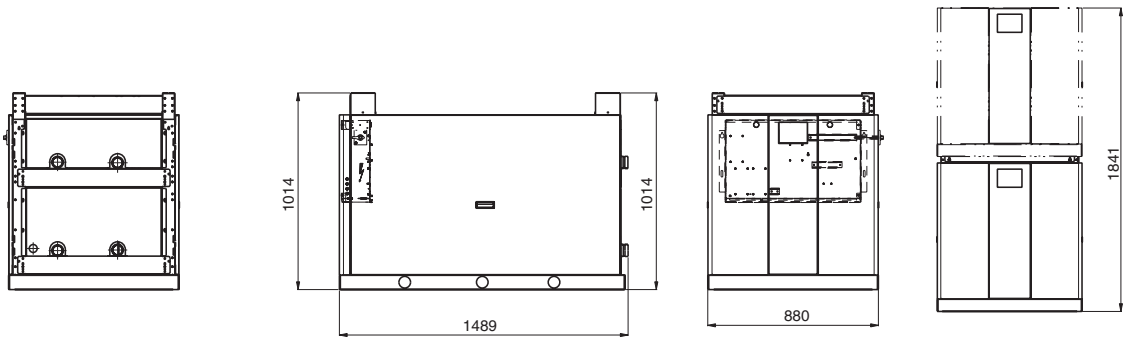

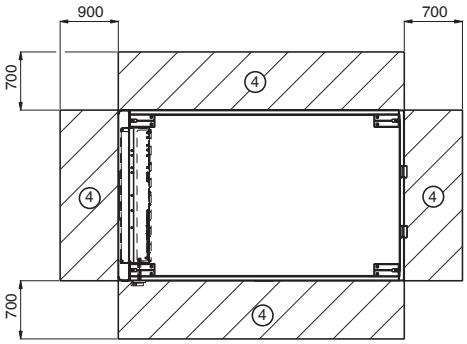

Legend:

All dimensions are in mm.

1. Evaporator
2. Condenser
3. Safety valve
4. Clearances required for maintenance (see note)
5. Control box

Water inlet

Water outlet

Power wiring connection

Note: Non-contractual drawings. Refer to the certified dimensional drawings available on request, when designing an installation.

30XWH

Nominal heating capacity 317-1989 kW
Nominal cooling capacity 273-1756 kW

AQUAFORCE Heating

HEATING

Multi Tiering: Entry and premium efficiency

Wide operating envelope: up to +63 °C hot water temperature

Compactness: less than 1.2 m width up to 1600 kW

The 30XW liquid chillers are the premium solution for industrial and commercial applications where installers, consultants and building owners require optimal performances and maximum quality.

The 30XW liquid chillers are designed to meet current and future requirements in terms of energy efficiency, flexibility of use and compactness. They use the most reliable technologies available today:

- Twin-rotor screw compressors with a variable capacity valve
- Refrigerant R134a
- Touch Pilot control system
- Flooded heat exchangers that are mechanically cleanable

To meet to all environmental and economic requirements, the 30XW is available in two efficiency classes:

- Entry-level efficiency 30XW units that offer an optimised balance of technical and economical aspects,
- Premium-efficiency 30XW-P units that offer unequalled energy efficiency to satisfy the most stringent demands of building owners wanting to reduce operating costs to the minimum.

The 30XW AquaForce range is also split into two versions:

- 30XW for air conditioning and refrigeration applications
- 30XWH for heating applications

As standard, the unit can provide an evaporator leaving temperature down to 3,3°C (-12°C optional), and when operating as a heat pump, it can deliver up to 50°C (63°C optional) on the condenser side

Physical data

30XWH-		254	304	354	402	452	552	602	652	702	802
Heating application as per EN14511-3:2013† - standard unit											
Condition 2											
Nominal heating capacity	kW	317	358	421	516	529	599	632	751	813	887
COP	kW/kW	4.59	4.57	4.61	4.54	4.59	4.47	4.52	4.56	4.49	4.46
Eurovent class heating	-	A	A	A	A	A	A	A	A	A	A
Heating application †† - standard unit											
Condition 2											
Nominal heating capacity	kW	316	357	419	514	527	597	629	748	810	883
COP	kW/kW	4.80	4.78	4.84	4.74	4.79	4.70	4.78	4.78	4.73	4.73
Sound levels - standard unit											
Sound power level*	dB(A)	95	95	95	99	99	99	99	99	99	99
Sound pressure level at 1 m**	dB(A)	78	78	78	82	82	82	82	82	82	82
Sound levels - standard unit + option 257* **											
Sound power level*	dB(A)	-	-	-	96	96	96	96	96	96	96
Sound pressure level at 1 m**	dB(A)	-	-	-	78	78	78	78	78	78	78
Dimensions - standard unit											
Length	mm	2724	2724	2724	2741	2741	2741	2741	3059	3059	3059
Width	mm	928	928	928	936	936	936	936	1040	1040	1040
Height	mm	1567	1567	1567	1692	1692	1692	1692	1848	1848	1848
Operating weight** **	kg	2017	2036	2072	2575	2575	2613	2644	3247	3266	3282
Compressors		Semi-hermetic 06T screw compressors, 50 r/s									
Circuit A	-	1	1	1	1	1	1	1	1	1	1
Circuit B	-	-	-	-	-	-	-	-	-	-	-
Refrigerant** - standard unit**											
Circuit A	kg	84	80	78	82	82	82	82	145	140	135
Circuit B	kg	-	-	-	-	-	-	-	-	-	-
Global Warming Potential (GWP)		R-134a									
Tonnes of equivalent CO_2 of greatest circuit	tonnes	120	114	112	117	117	117	117	207	200	193
Capacity control		Touch Pilot, electronic expansion valves (EXV)									
Minimum capcity	%	15	15	15	15	15	15	15	15	15	15
Evaporator		Multi-pipe flooded type									
Water volume	l	50	56	61	70	70	70	70	109	109	109
Water connections (Victaulic)	in	5	5	5	5	5	5	5	6	6	6
Drain and vent connections (NPT)	in	3/8	3/8	3/8	3/8	3/8	3/8	3/8	3/8	3/8	3/8
Max. water-side operating pressure	kPa	1000	1000	1000	1000	1000	1000	1000	1000	1000	1000
Condenser		Multi-pipe flooded type									
Water volume	l	55	55	55	76	76	76	76	109	109	109
Water connections (Victaulic)	in	5	5	5	5	5	5	5	6	6	6
Drain and vent connections (NPT)	in	3/8	3/8	3/8	3/8	3/8	3/8	3/8	3/8	3/8	3/8
Max. water-side operating pressure	kPa	1000	1000	1000	1000	1000	1000	1000	1000	1000	1000

† Eurovent-certified performances in accordance with standard EN14511-3:2013.
†† Gross performances, not in accordance with EN14511-3:2013. These performances do not take into account the correction for the proportional heating capacity and power input generated by the water pump to overcome the internal pressure drop in the heat exchanger.
Condition 1 : Cooling mode conditions, evaporator water entering/leaving temperature 12°C/7°C, condenser water entering/leaving temperature 30°C/35°C, evaporator fouling factor 0 m².K/W.
Condition 2: Cooling mode conditions, condenser water entering/leaving temperature 40°C/45°C, evaporator water entering/leaving temperature 10°C/7°C, evaporator fouling factor 0 m².K/W.
* In dB ref=10-12 W, (A) weighting. Declared dualnumber noise emission values in accordance with ISO 4871 (with an associated uncertainty of +/-3dB(A)). Measured in accordance with ISO 9614-1 and certified by Eurovent.
** In dB ref 20µPa, (A) weighting. Declared dualnumber noise emission values in accordance with ISO 4871 (with an associated uncertainty of +/-3dB(A)). For information, calculated from the sound power level Lw(A).
*** Option 257 = Low noise level.
**** Weight shown is guideline only. Please refer to the unit nameplate.

Eurovent certified data

Physical data

30XWH-		852	1002	1052	1154	1252	1352	1452	1552	1652	1702
Heating application as per EN14511-3:2013† - standard unit											
Condition 2											
Nominal heating capacity	kW	967	1138	1190	1320	1384	1481	1612	1717	1891	1969
COP	kW/kW	4.64	4.48	4.42	4.54	4.73	4.57	4.46	4.41	4.67	4.68
Eurovent class heating	-	A	A	B	A	A	A	-	-	-	-
Heating application †† - standard unit											
Condition 2											
Nominal heating capacity	kW	964	1134	1186	1314	1380	1476	1606	1710	1884	1962
COP	kW/kW	4.93	4.76	4.74	4.89	5.02	4.88	4.81	4.80	5.10	5.15
Sound levels - standard unit											
Sound power level*	dB(A)	99	102	102	102	102	102	102	102	102	102
Sound pressure level at 1 m**	dB(A)	82	84	84	84	83	83	83	83	83	83
Sound levels - standard unit + option 257* **											
Sound power level*	dB(A)	96	99	99	99	99	99	99	99	99	99
Sound pressure level at 1 m**	dB(A)	78	80	80	80	80	80	80	80	80	80
Dimensions - standard unit											
Length	mm	2780	4025	4025	4025	4730	4730	4730	4730	4790	4790
Width	mm	1442	1036	1036	1156	1156	1156	1156	1156	1902	1902
Height	mm	1898	1870	1925	2051	2051	2051	2051	2051	1515	1515
Operating weight** **	kg	3492	5370	5408	5698	7066	7267	7305	7337	8681	8699
Compressors		Semi-hermetic 06T screw compressors, 50 r/s									
Circuit A	-	1	1	1	1	1	1	1	1	1	1
Circuit B	-	-	1	1	1	1	1	1	1	1	1
Refrigerant** - standard unit**		R-134a									
Circuit A	kg	140	85	85	105	120	115	110	105	195	195
Circuit B	kg	-	85	85	105	120	115	110	105	195	195
Global Warming Potential (GWP)											
Tonnes of equivalent CO_2 of greatest circuit	tonnes	200	122	122	150	172	164	157	150	279	279
Capacity control		Touch Pilot, electronic expansion valves (EXV)									
Minimum capcity	%	15	10	10	10	10	10	10	10	10	10
Evaporator		Multi-pipe flooded type									
Water volume	l	98	182	182	205	301	301	301	301	354	354
Water connections (Victaulic)	in	6	6	6	8	8	8	8	8	8	8
Drain and vent connections (NPT)	in	3/8	3/8	3/8	3/8	3/8	3/8	3/8	3/8	3/8	3/8
Max. water-side operating pressure	kPa	1000	1000	1000	1000	1000	1000	1000	1000	1000	1000
Condenser		Multi-pipe flooded type									
Water volume	l	137	193	193	193	340	340	340	340	426	426
Water connections (Victaulic)	in	8	8	8	8	8	8	8	8	8	8
Drain and vent connections (NPT)	in	3/8	3/8	3/8	3/8	3/8	3/8	3/8	3/8	3/8	3/8
Max. water-side operating pressure	kPa	1000	1000	1000	1000	1000	1000	1000	1000	1000	1000

† Eurovent-certified performances in accordance with standard EN14511-3:2013.
† † Gross performances, not in accordance with EN14511-3:2013. These performances do not take into account the correction for the proportional heating capacity and power input generated by the water pump to overcome the internal pressure drop in the heat exchanger.
Condition 1 : Cooling mode conditions, evaporator water entering/leaving temperature 12°C/7°C, condenser water entering/leaving temperature 30°C/35°C, evaporator fouling factor 0 m².K/W.
Condition 2: Cooling mode conditions, condenser water entering/leaving temperature 40°C/45°C, evaporator water entering/leaving temperature 10°C/7°C, evaporator fouling factor 0 m².K/W.
* In dB ref=10-12 W, (A) weighting. Declared dualnumber noise emission values in accordance with ISO 4871 (with an associated uncertainty of +/-3dB(A)). Measured in accordance with ISO 9614-1 and certified by Eurovent.
** In dB ref 20µPa, (A) weighting. Declared dualnumber noise emission values in accordance with ISO 4871 (with an associated uncertainty of +/-3dB(A)). For information, calculated from the sound power level Lw(A).
*** Option 257 = Low noise level.
**** Weight shown is guideline only. Please refer to the unit nameplate.

Eurovent certified data

HEATING

30XWHP		512	562	712	812	862	1012	1162	1314	1464	1612	1762
Heating application as per EN14511-3:2013† - standard unit												
Condition 2												
Nominal heating capacity	kW	583	662	842	904	982	1191	1320	1509	1663	1846	1989
COP	kW/kW	4.91	4.84	4.97	4.80	4.85	4.90	4.86	4.89	4.71	4.89	4.87
Eurovent class heating	-	A	A	A	A	A	A	A	-	-	-	-
Heating application †† - standard unit												
Condition 2												
Nominal heating capacity	kW	581	660	840	901	978	1188	1316	1503	1657	1841	1983
COP	kW/kW	5.12	5.07	5.17	5.01	5.10	5.14	5.19	5.23	5.07	5.18	5.19
Sound levels - standard unit												
Sound power level*	dB(A)	99	99	99	99	99	102	102	102	102	102	102
Sound pressure level at 1 m**	dB(A)	82	82	81	81	81	83	83	83	83	83	83
Sound levels - standard unit + option 257* **												
Sound power level*	dB(A)	96	96	96	96	96	99	99	99	99	99	99
Sound pressure level at 1 m**	dB(A)	78	78	78	78	78	80	80	80	80	80	80
Dimensions - standard unit												
Length	mm	3059	3059	3290	3290	3290	4730	4730	4730	4730	4832	4832
Width	mm	936	936	1069	1069	1069	1039	1039	1162	1162	2129	2129
Height	mm	1743	1743	1950	1950	1950	1997	1997	2051	2051	1562	1562
Operating weight** **	kg	2981	3020	3912	3947	3965	6872	6950	7542	7752	10910	10946
Compressors		Semi-hermetic 06T screw compressors, 50 r/s										
Circuit A	-	1	1	1	1	1	1	1	1	1	1	1
Circuit B	-	-	-	-	-	-	1	1	1	1	1	1
Refrigerant** - standard unit**		R-134a										
Circuit A	kg	130	130	180	175	170	120	120	130	130	240	250
Circuit B	kg	-	-	-	-	-	120	120	150	130	240	250
Global Warming Potential (GWP)												
Tonnes of equivalent CO_2 of greatest circuit	tonnes	186	186	257	250	243	172	172	215	186	343	358
Capacity control		Touch Pilot, electronic expansion valves (EXV)										
Minimum capcity	%	15	15	15	15	15	10	10	10	10	10	10
Evaporator		Multi-pipe flooded type										
Water volume	l	101	101	154	154	154	293	293	321	321	473	473
Water connections (Victaulic)	in	6	6	8	8	8	8	8	8	8	10	10
Drain and vent connections (NPT)	in	3/8	3/8	3/8	3/8	3/8	3/8	3/8	3/8	3/8	3/8	3/8
Max. water-side operating pressure	kPa	1000	1000	1000	1000	1000	1000	1000	1000	1000	1000	1000
Condenser		Multi-pipe flooded type										
Water volume	l	103	103	148	148	148	316	316	340	340	623	623
Water connections (Victaulic)	in	6	6	8	8	8	8	8	8	8	10	10
Drain and vent connections (NPT)	in	3/8	3/8	3/8	3/8	3/8	3/8	3/8	3/8	3/8	3/8	3/8
Max. water-side operating pressure	kPa	1000	1000	1000	1000	1000	1000	1000	1000	1000	1000	1000

† Eurovent-certified performances in accordance with standard EN14511-3:2013.
† † Gross performances, not in accordance with EN14511-3:2013. These performances do not take into account the correction for the proportional heating capacity and power input generated by the water pump to overcome the internal pressure drop in the heat exchanger.
Condition 1 : Cooling mode conditions, evaporator water entering/leaving temperature 12°C/7°C, condenser water entering/leaving temperature 30°C/35°C, evaporator fouling factor 0 m².K/W.
Condition 2: Cooling mode conditions, condenser water entering/leaving temperature 40°C/45°C, evaporator water entering/leaving temperature 10°C/7°C, evaporator fouling factor 0 m².K/W.
* In dB ref=10-12 W, (A) weighting. Declared dualnumber noise emission values in accordance with ISO 4871 (with an associated uncertainty of +/-3dB(A)). Measured in accordance with ISO 9614-1 and certified by Eurovent.
** In dB ref 20µPa, (A) weighting. Declared dualnumber noise emission values in accordance with ISO 4871 (with an associated uncertainty of +/-3dB(A)). For information, calculated from the sound power level Lw(A).
*** Option 257 = Low noise level.
**** Weight shown is guideline only. Please refer to the unit nameplate.

Eurovent certified data

Electrical data, standard units

Standard-efficiency units

30XWH-		254	304	354	402	452	552	602	652	702	802
Power circuit											
Nominal power supply	V-ph-Hz	400-3-50									
Voltage range	V	360-440									
Control circuit		24 V via the built-in transformer									
Nominal start-up current*											
Circuit A	A	233	233	303	414	414	414	414	587	587	587
Circuit B	A	-	-	-	-	-	-	-	-	-	-
Option 81	A	-	-	-	-	-	-	-	-	-	-
Maximum start-up current**											
Circuit A	A	233	233	303	414	414	414	414	587	587	587
Circuit B	A	-	-	-	-	-	-	-	-	-	-
Option 81	A	-	-	-	-	-	-	-	-	-	-
Cosine phi											
Nominal***		0.83	0.85	0.83	0.87	0.88	0.89	0.89	0.88	0.89	0.90
Maximum****		0.89	0.89	0.88	0.90	0.90	0.91	0.91	0.90	0.91	0.92
Total harmonic distortion****	%	0	0	0	0	0	0	0	0	0	0
Maximum power input†											
Circuit A	kW	76	89	97	128	135	151	151	184	200	223
Circuit B	kW	-	-	-	-	-	-	-	-	-	-
Option 81	kW	-	-	-	-	-	-	-	-	-	-
Nominal current drawn* **											
Circuit A	A	84	96	113	136	144	162	162	193	214	232
Circuit B	A	-	-	-	-	-	-	-	-	-	-
Option 81	A	-	-	-	-	-	-	-	-	-	-
Maximum current drawn (Un)†											
Circuit A	A	123	145	160	206	217	242	242	295	317	351
Circuit B	A	-	-	-	-	-	-	-	-	-	-
Option 81	A	-	-	-	-	-	-	-	-	-	-
Maximum current drawn (Un -10%)** **											
Circuit A	A	138	162	178	218	230	260	260	304	340	358
Circuit B	A	-	-	-	-	-	-	-	-	-	-
Option 81	A	-	-	-	-	-	-	-	-	-	-
Maximum power input with option 150B†											
Circuit A	kW	138	162	178	218	230	260	260	304	340	358
Circuit B	kW	-	-	-	-	-	-	-	-	-	-
Option 81	kW	-	-	-	-	-	-	-	-	-	-
Maximum current drawn (Un) with option 150B†											
Circuit A	A	109	129	142	183	191	212	212	278	290	325
Circuit B	A	-	-	-	-	-	-	-	-	-	-
Option 81	A	-	-	-	-	-	-	-	-	-	-

* Instantaneous start-up current (maximum operating current of the smallest compressor(s) + locked rotor current or reduced start-up current of the largest compressor). Values obtained at standard Eurovent unit operating conditions: evaporator entering/leaving water temperature = 12°C/7°C, condenser entering/leaving water temperature = 30°C/35°C.

** Instantaneous start-up current (maximum operating current of the smallest compressor(s) + locked rotor current or reduced start-up current of the largest compressor). Values obtained at operation with maximum unit power input.

*** Values obtained at standard Eurovent unit operating conditions: evaporator entering/leaving water temperature = 12°C/7°C, condenser entering/leaving water temperature = 30°C/35°C

**** Values obtained at operation with maximum unit power input.

† Values obtained at operation with maximum unit power input. Values given on the unit name plate.

HEATING

30XWH-		852	1002	1052	1154	1252	1352	1452	1552	1652	1702
Power circuit											
Nominal power supply	V-ph-Hz	400-3-50									
Voltage range	V	360-440									
Control circuit		24 V via the built-in transformer									
Nominal start-up current*											
Circuit A	A	587	414	414	414	587	587	587	587	587	587
Circuit B	A	-	414	414	414	414	587	587	587	587	587
Option 81	A	-	558	574	574	747	780	801	819	819	819
Maximum start-up current**											
Circuit A	A	587	414	414	414	587	587	587	587	587	587
Circuit B	A	-	414	414	414	414	587	587	587	587	587
Option 81	A	-	631	656	656	829	882	904	938	938	938
Cosine phi											
Nominal***		0.90	0.88	0.89	0.89	0.88	0.88	0.89	0.9	0.9	0.9
Maximum****		0.92	0.90	0.91	0.91	0.90	0.90	0.91	0.92	0.92	0.92
Total harmonic distortion****	%	0	0	0	0	0	0	0	0	0	0
Maximum power input†											
Circuit A	kW	223	150	151	151	184	184	200	223	223	223
Circuit B	kW	-	135	151	151	151	184	200	223	202	223
Option 81	kW	-	284	301	301	334	367	399	447	425	447
Nominal current drawn***											
Circuit A	A	232	162	162	162	193	193	214	232	232	232
Circuit B	A	-	144	162	162	162	193	214	232	214	232
Option 81	A	-	306	324	324	355	386	427	464	446	464
Maximum current drawn (Un)†											
Circuit A	A	351	242	242	242	295	295	317	351	351	351
Circuit B	A	-	217	242	242	242	295	317	351	317	351
Option 81	A	-	459	484	484	537	590	634	702	668	702
Maximum current drawn (Un -10%)****											
Circuit A	A	358	260	260	260	304	304	340	358	358	358
Circuit B	A	-	230	260	260	260	304	340	358	340	358
Option 81	A	-	490	520	520	564	608	680	716	698	716
Maximum power input with option 150B†											
Circuit A	kW	205	133	133	133	173	173	183	207	207	207
Circuit B	kW	-	118	133	133	133	173	183	207	185	207
Option 81	kW	-	251	265	265	305	346	365	414	391	414
Maximum current drawn (Un) with option 150B†											
Circuit A	A	325	212	212	212	278	278	290	325	325	325
Circuit B	A	-	191	212	212	212	278	290	325	290	325
Option 81	A	-	403	424	424	490	556	580	650	615	650

* Instantaneous start-up current (maximum operating current of the smallest compressor(s) + locked rotor current or reduced start-up current of the largest compressor). Values obtained at standard Eurovent unit operating conditions: evaporator entering/leaving water temperature = 12°C/7°C, condenser entering/leaving water temperature = 30°C/35°C.

** Instantaneous start-up current (maximum operating current of the smallest compressor(s) + locked rotor current or reduced start-up current of the largest compressor). Values obtained at operation with maximum unit power input.

*** Values obtained at standard Eurovent unit operating conditions: evaporator entering/leaving water temperature = 12°C/7°C, condenser entering/leaving water temperature = 30°C/35°C

**** Values obtained at operation with maximum unit power input.

† Values obtained at operation with maximum unit power input. Values given on the unit name plate.

Electrical data, standard units

High-efficiency units

30XWHP		512	562	712	812	862	1012	1162	1314	1464	1612	1762
Power circuit												
Nominal power supply	V-ph-Hz	400-3-50										
Voltage range	V	360-440										
Control circuit		24 V via the built-in transformer										
Nominal start-up current*												
Circuit A	A	414	414	587	587	587	414	414	587	587	587	587
Circuit B	A	-	-	-	-	-	414	414	414	587	587	587
Option 81	A	-	-	-	-	-	556	574	747	780	801	819
Maximum start-up current**												
Circuit A	A	414	414	587	587	587	414	414	587	587	587	587
Circuit B	A	-	-	-	-	-	414	414	414	587	587	587
Option 81	A	-	-	-	-	-	631	656	829	882	904	938
Cosine phi												
Nominal***		0.88	0.89	0.88	0.89	0.90	0.86	0.87	0.88	0.88	0.89	0.90
Maximum****		0.90	0.90	0.90	0.91	0.92	0.89	0.90	0.90	0.90	0.91	0.92
Total harmonic distortion****	%	0	0	0	0	0	0	0	0	0	0	0
Maximum power input†												
Circuit A	kW	135	151	184	200	223	134	151	184	184	200	223
Circuit B	kW	-	-	-	-	-	134	151	151	184	200	223
Option 81	kW	-	-	-	-	-	267	301	334	367	399	447
Nominal current drawn***												
Circuit A	A	144	162	193	214	232	144	162	193	193	214	232
Circuit B	A	-	-	-	-	-	144	162	162	193	214	232
Option 81	A	-	-	-	-	-	288	324	355	386	427	464
Maximum current drawn (Un)†												
Circuit A	A	217	242	295	317	351	217	242	295	295	317	351
Circuit B	A	-	-	-	-	-	217	242	242	295	317	351
Option 81	A	-	-	-	-	-	434	484	537	590	634	702
Maximum current drawn (Un -10%)****												
Circuit A	A	230	260	304	340	358	230	260	304	304	340	358
Circuit B	A	-	-	-	-	-	230	260	260	304	340	358
Option 81	A	-	-	-	-	-	460	520	564	608	680	716
Maximum power input with option 150B†												
Circuit A	kW	118	133	173	183	207	118	133	173	173	183	207
Circuit B	kW	-	-	-	-	-	118	133	133	173	183	207
Option 81	kW						235	265	305	346	365	414
Maximum current drawn (Un) with option 150B†												
Circuit A	A	191	212	278	290	325	191	212	278	278	290	325
Circuit B	A	-	-	-	-	-	191	212	212	278	290	325
Option 81	A	-	-	-	-	-	382	424	490	556	580	650

* Instantaneous start-up current (maximum operating current of the smallest compressor(s) + locked rotor current or reduced start-up current of the largest compressor). Values obtained at standard Eurovent unit operating conditions: evaporator entering/leaving water temperature = 12°C/7°C, condenser entering/leaving water temperature = 30°C/35°C.

** Instantaneous start-up current (maximum operating current of the smallest compressor(s) + locked rotor current or reduced start-up current of the largest compressor). Values obtained at operation with maximum unit power input.

*** Values obtained at standard Eurovent unit operating conditions: evaporator entering/leaving water temperature = 12°C/7°C, condenser entering/leaving water temperature = 30°C/35°C

**** Values obtained at operation with maximum unit power input.

† Values obtained at operation with maximum unit power input. Values given on the unit name plate.

HEATING

Physical data, units for high condensing temperatures

High-efficiency units (option 150)

30XWH-		254	304	354	402	452	552	602	652	702	802
Heating application as per EN14511-3:2013† - unit with option 150											
Condition 2											
Nominal heating capacity	kW	325	362	408	478	506	566	606	716	789	829
COP	kW/kW	4.62	4.59	4.55	4.29	4.50	4.43	4.54	4.45	4.45	4.41
Eurovent class heating	-	A	A	A	B	A	B	A	A	A	A
Heating application †† - unit with option 150											
Condition 2											
Nominal heating capacity	kW	324	361	407	476	504	564	603	713	786	826
COP	kW/kW	4.85	4.81	4.78	4.46	4.70	4.66	4.82	4.66	4.70	4.68
Sound levels - unit with option 150											
Sound power level*	dB(A)	95	95	95	99	99	99	99	102	102	102
Sound pressure level at 1 m**	dB(A)	78	78	78	82	82	82	82	84	84	82
Sound levels - unit with option 257* **											
Sound power level*	dB(A)	-	-	-	96	96	96	96	100	100	100
Sound pressure level at 1 m**	dB(A)	-	-	-	78	78	78	78	82	82	82
Dimensions - unit with option 150											
Length	mm	2724	2724	2724	2741	2741	2741	2741	3059	3059	3059
Width	mm	928	928	928	936	936	936	936	1090	1090	1090
Height	mm	1567	1567	1567	1692	1692	1692	1692	1858	1858	1858
Operating weight** **	kg	2017	2036	2072	2575	2575	2613	2644	3407	3438	3462
Compressors		Semi-hermetic 06T screw compressors, 50 r/s									
Circuit A	-	1	1	1	1	1	1	1	1	1	1
Circuit B	-	-	-	-	-	-	-	-	-	-	-
Refrigerant** ** - standard unit**											
Circuit A	kg	84	80	78	82	82	82	82	145	140	135
Circuit B	kg	-	-	-	-	-	-	-	-	-	-
Global Warming Potential (GWP)											
Tonnes of equivalent CO_2 of greatest circuit	tonnes	120	114	112	117	117	117	117	207	200	193
Capacity control		Touch Pilot, electronic expansion valves (EXV)									
Minimum capcity	%	30	30	30	30	30	30	30	15	15	15
Evaporator		Multi-pipe flooded type									
Water volume	l	50	56	61	70	70	70	70	109	109	109
Water connections (Victaulic)	in	5	5	5	5	5	5	5	6	6	6
Drain and vent connections (NPT)	in	3/8	3/8	3/8	3/8	3/8	3/8	3/8	3/8	3/8	3/8
Max. water-side operating pressure	kPa	1000	1000	1000	1000	1000	1000	1000	1000	1000	1000
Condenser		Multi-pipe flooded type									
Water volume	l	55	55	55	76	76	76	76	109	109	109
Water connections (Victaulic)	in	5	5	5	5	5	5	5	6	6	6
Drain and vent connections (NPT)	in	3/8	3/8	3/8	3/8	3/8	3/8	3/8	3/8	3/8	3/8
Max. water-side operating pressure	kPa	1000	1000	1000	1000	1000	1000	1000	1000	1000	1000

† Eurovent-certified performances in accordance with standard EN14511-3:2013.

† † Gross performances, not in accordance with EN14511-3:2013. These performances do not take into account the correction for the proportional heating capacity and power input generated by the water pump to overcome the internal pressure drop in the heat exchanger.
Conditions in cooling mode: evaporator entering/leaving water temperature 12°C/7°C, condenser entering/leaving water temperature 30°C/35°C, evaporator and condenser fouling factor = 0 m2 K/W.
Conditions in heating mode: condenser entering/leaving water temperature 40°C/45°C, evaporator entering/leaving water temperature 10°C/7°C, evaporator and condenser fouling factor = 0 m2 K/W.

* In dB ref=10-12 W, (A) weighting. Declared dualnumber noise emission values in accordance with ISO 4871 (with an associated uncertainty of +/-3dB(A)). Measured in accordance with SO 9614-1 and certified by Eurovent.

** In dB ref 20µPa, (A) weighting. Declared dualnumber noise emission values in accordance with ISO 4871 (with an associated uncertainty of +/-3dB(A)). For information, calculated from the sound power level Lw(A).

*** Option 257 = Low noise level.

**** Weight shown is guideline only. Please refer to the unit nameplate.

Eurovent certified data

HEATING

AIR TREATMENT

CONTROLS

Physical data, units for high condensing temperatures

Standard-efficiency units (option 150)

30XWH-		254	304	354	402	452	552	602	652	702	802
Heating application as per EN14511-3:2013† - unit with option 150											
Condition 2											
Nominal heating capacity	kW	958	1099	1163	1294	1348	1465	1583	1677	1904	1975
COP	kW/kW	4.57	4.53	4.47	4.55	4.71	4.52	4.46	4.45	4.59	4.56
Eurovent class heating	-	A	A	A	A	A	A	-	-	-	-
Heating application †† - unit with option 150											
Condition 2											
Nominal heating capacity	kW	955	1094	1158	1288	1344	1460	1578	1672	1898	1968
COP	kW/kW	4.86	4.83	4.79	4.91	5.02	4.82	4.80	4.86	5.02	5.03
Sound levels - unit with option 150											
Sound power level*	dB(A)	102	102	102	102	105	105	105	105	105	105
Sound pressure level at 1 m**	dB(A)	84	84	84	84	86	86	86	86	86	86
Sound levels - unit with option 257* **											
Sound power level*	dB(A)	100	99	99	99	103	103	103	103	103	103
Sound pressure level at 1 m**	dB(A)	82	80	80	80	84	84	84	84	84	84
Dimensions - unit with option 150											
Length	mm	2780	4025	4025	4025	4730	4730	4730	4730	4730	4730
Width	mm	1090	1036	1036	1036	1201	1201	1201	1201	1947	1947
Height	mm	1920	1870	1870	1925	2071	2071	2071	2071	1535	1535
Operating weight** **	kg	3672	5370	5408	5698	7233	7554	7622	7670	9006	9032
Compressors		Semi-hermetic 06T screw compressors, 50 r/s									
Circuit A	-	1	1	1	1	1	1	1	1	1	1
Circuit B	-	-	1	1	1	1	1	1	1	1	1
Refrigerant** - standard unit**											
Circuit A	kg	140	85	85	105	120	115	110	105	195	195
Circuit B	kg	-	85	85	105	120	115	110	105	195	195
Global Warming Potential (GWP)											
Tonnes of equivalent CO_2 of greatest circuit	tonnes	200	122	122	150	172	164	157	150	279	279
Capacity control		Touch Pilot, electronic expansion valves (EXV)									
Minimum capcity	%	15	10	10	10	10	10	10	10	10	10
Evaporator		Multi-pipe flooded type									
Water volume	l	98	182	182	205	301	301	301	301	354	354
Water connections (Victaulic)	in	6	6	6	8	8	8	8	8	8	8
Drain and vent connections (NPT)	in	3/8	3/8	3/8	3/8	3/8	3/8	3/8	3/8	3/8	3/8
Max. water-side operating pressure	kPa	1000	1000	1000	1000	1000	1000	1000	1000	1000	1000
Condenser		Multi-pipe flooded type									
Water volume	l	137	193	193	193	340	340	340	340	426	426
Water connections (Victaulic)	in	8	8	8	8	8	8	8	8	8	8
Drain and vent connections (NPT)	in	3/8	3/8	3/8	3/8	3/8	3/8	3/8	3/8	3/8	3/8
Max. water-side operating pressure	kPa	1000	1000	1000	1000	1000	1000	1000	1000	1000	1000

† Eurovent-certified performances in accordance with standard EN14511-3:2013.

†† Gross performances, not in accordance with EN14511-3:2013. These performances do not take into account the correction for the proportional heating capacity and power input generated by the water pump to overcome the internal pressure drop in the heat exchanger.
Conditions in cooling mode: evaporator entering/leaving water temperature 12°C/7°C, condenser entering/leaving water temperature 30°C/35°C, evaporator and condenser fouling factor = 0 m2 K/W.
Conditions in heating mode: condenser entering/leaving water temperature 40°C/45°C, evaporator entering/leaving water temperature 10°C/7°C, evaporator and condenser fouling factor = 0 m2 K/W.

* In dB ref=10-12 W, (A) weighting. Declared dualnumber noise emission values in accordance with ISO 4871 (with an associated uncertainty of +/-3dB(A)). Measured in accordance with SO 9614-1 and certified by Eurovent.

** In dB ref 20µPa, (A) weighting. Declared dualnumber noise emission values in accordance with ISO 4871 (with an associated uncertainty of +/-3dB(A)). For information, calculated from the sound power level Lw(A).

*** Option 257 = Low noise level.

**** Weight shown is guideline only. Please refer to the unit nameplate.

Eurovent certified data

HEATING

Physical data, units for high condensing temperatures

High-efficiency units (option 150)

30XWHP		512	562	712	812	862	1012	1162	1314	1464	1612	1762
Heating application as per EN14511-3:2013† - unit with option 150												
Condition 2												
Nominal heating capacity	kW	584	651	828	897	1003	1164	1341	1485	1669	1850	1997
COP	kW/kW	4.88	4.89	4.81	4.68	4.94	4.73	4.86	4.69	4.58	4.84	4.93
Eurovent class heating	-	A	A	A	A	A	A	A	A	-	-	-
Heating application †† - unit with option 150												
Condition 2												
Nominal heating capacity	kW	582	648	826	895	999	1161	1337	1479	1661	1844	1991
COP	kW/kW	5.08	5.13	5.01	4.89	5.20	4.98	5.20	5.01	4.92	5.11	5.25
Sound levels - unit with option 150												
Sound power level*	dB(A)	99	99	102	102	102	102	102	105	105	105	105
Sound pressure level at 1 m**	dB(A)	82	82	84	84	84	83	83	86	86	86	86
Sound levels - unit with option 257* **												
Sound power level*	dB(A)	96	96	100	100	100	99	99	103	103	103	103
Sound pressure level at 1 m**	dB(A)	78	78	82	82	82	80	80	84	84	84	84
Dimensions - unit with option 150												
Length	mm	3059	3059	3290	3290	3290	4730	4730	4730	4730	4832	4832
Width	mm	936	936	1105	1105	1105	1039	1039	1202	1202	2174	2174
Height	mm	1743	1743	1970	1970	1970	1997	1997	2071	2071	1585	1585
Operating weight** **	kg	2981	3020	4072	4117	4145	6872	6950	7721	8059	11225	11279
Compressors												
Circuit A	-	1	1	1	1	1	1	1	1	1	1	1
Circuit B	-	-	-	-	-	-	1	1	1	1	1	1
Refrigerant** ** - **standard unit**		R-134a										
Circuit A	kg	130	130	180	175	170	120	120	130	130	240	250
Circuit B	kg	-	-	-	-	-	120	120	150	130	240	250
Global Warming Potential (GWP)												
Tonnes of equivalent CO_2 of greatest circuit	tonnes	186	186	257	250	243	172	172	215	186	343	358
Capacity control		Touch Pilot, electronic expansion valves (EXV)										
Minimum capcity	%	30	30	15	15	15	10	10	10	10	10	10
Evaporator		Multi-pipe flooded type										
Water volume	l	101	101	154	154	154	293	293	321	321	473	473
Water connections (Victaulic)	in	6	6	8	8	8	8	8	8	8	10	10
Drain and vent connections (NPT)	in	3/8	3/8	3/8	3/8	3/8	3/8	3/8	3/8	3/8	3/8	3/8
Max. water-side operating pressure	kPa	1000	1000	1000	1000	1000	1000	1000	1000	1000	1000	1000
Condenser		Multi-pipe flooded type										
Water volume	l	103	103	148	148	148	316	316	340	340	623	623
Water connections (Victaulic)	in	6	6	8	8	8	8	8	10	10	10	10
Drain and vent connections (NPT)	in	3/8	3/8	3/8	3/8	3/8	3/8	3/8	3/8	3/8	3/8	3/8
Max. water-side operating pressure	kPa	1000	1000	1000	1000	1000	1000	1000	1000	1000	1000	1000

† Eurovent-certified performances in accordance with standard EN14511-3:2013.

†† Gross performances, not in accordance with EN14511-3:2013. These performances do not take into account the correction for the proportional heating capacity and power input generated by the water pump to overcome the internal pressure drop in the heat exchanger.
Conditions in cooling mode: evaporator entering/leaving water temperature 12°C/7°C, condenser entering/leaving water temperature 30°C/35°C, evaporator and condenser fouling factor = 0 m2 K/W.
Conditions in heating mode: condenser entering/leaving water temperature 40°C/45°C, evaporator entering/leaving water temperature 10°C/7°C, evaporator and condenser fouling factor = 0 m2 K/W.

* In dB ref=10-12 W, (A) weighting. Declared dualnumber noise emission values in accordance with ISO 4871 (with an associated uncertainty of +/-3dB(A)). Measured in accordance with SO 9614-1 and certified by Eurovent.

** In dB ref 20µPa, (A) weighting. Declared dualnumber noise emission values in accordance with ISO 4871 (with an associated uncertainty of +/-3dB(A)). For information, calculated from the sound power level Lw(A).

*** Option 257 = Low noise level.

**** Weight shown is guideline only. Please refer to the unit nameplate.

Electrical data, units for high condensing temperatures

Standard-efficiency units (option 150)

30XWH-		254	304	354	402	452	552	602	652	702	802
Power circuit											
Nominal power supply	V-ph-Hz	400-3-50									
Voltage range	V	360-440									
Control circuit		24 V via the built-in transformer									
Nominal start-up current*											
Circuit A	A	303	388	388	587	587	587	587	772	772	772
Circuit B	A	-	-	-	-	-	-	-	-	-	-
Option 81	A	-	-	-	-	-	-	-	-	-	-
Maximum start-up current**											
Circuit A	A	303	388	388	587	587	587	587	772	772	772
Circuit B	A	-	-	-	-	-	-	-	-	-	-
Option 81	A	-	-	-	-	-	-	-	-	-	-
Cosine phi											
Nominal***		0.79	0.78	0.79	0.83	0.85	0.85	0.85	0.84	0.86	0.87
Maximum****		0.88	0.87	0.88	0.90	0.90	0.91	0.91	0.90	0.90	0.90
Total harmonic distortion****	%	0	0	0	0	0	0	0	0	0	0
Maximum power input†											
Circuit A	kW	97	111	122	156	173	191	191	249	268	286
Circuit B	kW	-	-	-	-	-	-	-	-	-	-
Option 81	kW	-	-	-	-	-	-	-	-	-	-
Nominal current drawn***											
Circuit A	A	95	109	125	150	162	171	171	193	214	232
Circuit B	A	-	-	-	-	-	-	-	-	-	-
Option 81	A	-	-	-	-	-	-	-	-	-	-
Maximum current drawn (Un)†											
Circuit A	A	160	185	200	250	275	300	300	400	430	460
Circuit B	A	-	-	-	-	-	-	-	-	-	-
Option 81	A	-	-	-	-	-	-	-	-	-	-
Maximum current drawn (Un -10%)****											
Circuit A	A	176	206	224	270	300	330	330	419	455	476
Circuit B	A	-	-	-	-	-	-	-	-	-	-
Option 81	A	-	-	-	-	-	-	-	-	-	-

* Instantaneous start-up current (maximum operating current of the smallest compressor(s) + locked rotor current or reduced start-up current of the largest compressor). Values based on standard Eurovent unit operating conditions: evaporator entering/leaving water temp. = 12°C/7°C, condenser entering/leaving water temp. = 30°C/35°C.

** Instantaneous start-up current (maximum operating current of the smallest compressor(s) + locked rotor current or reduced start-up current of the largest compressor). Values obtained at operation with maximum unit power input.

*** Values based on standard Eurovent unit operating conditions: evaporator entering/leaving water temp. = 12°C/7°C, condenser entering/leaving water temp. = 30°C/35°C.

**** Values obtained at operation with maximum unit power input.

† Values obtained at operation with maximum unit power input. Values given on the unit name plate.

30XWH-		852	1002	1052	1154	1252	1352	1452	1552	1652	1702
Power circuit											
Nominal power supply	V-ph-Hz	400-3-50									
Voltage range	V	360-440									
Control circuit		24 V via the built-in transformer									
Nominal start-up current*											
Circuit A	A	772	587	587	587	772	772	772	772	772	772
Circuit B	A	-	587	587	587	587	772	772	772	772	772
Option 81	A	-	757	757	757	943	965	986	1004	1004	1004
Maximum start-up current**											
Circuit A	A	772	587	587	587	772	772	772	772	772	772
Circuit B	A	-	587	587	587	587	772	772	772	772	772
Option 81	A	-	887	887	887	1072	1172	1202	1232	1004	1232
Cosine phi											
Nominal***		0.87	0.85	0.85	0.85	0.86	0.85	0.86	0.87	0.86	0.87
Maximum****		0.90	0.90	0.91	0.91	0.91	0.91	0.91	0.91	0.91	0.91
Total harmonic distortion****	%	0	0	0	0	0	0	0	0	0	0
Maximum power input†											
Circuit A	kW	286	191	191	191	252	252	271	290	290	290
Circuit B	kW	-	173	191	191	191	252	271	290	271	290
Option 81	kW	-	364	382	382	443	504	542	580	562	580
Nominal current drawn***											
Circuit A	A	232	171	171	171	210	210	230	250	250	250
Circuit B	A	-	162	171	171	171	210	230	250	230	250
Option 81	A	-	333	342	342	381	420	460	500	480	500
Maximum current drawn (Un)†											
Circuit A	A	460	300	300	300	400	400	430	460	460	460
Circuit B	A	-	275	300	300	300	400	430	460	430	460
Option 81	A	-	575	600	600	700	800	860	920	890	920
Maximum current drawn (Un -10%)****											
Circuit A	A	476	330	330	330	419	419	455	476	476	476
Circuit B	A	-	300	330	330	330	419	455	476	455	476
Option 81	A	-	630	660	660	749	838	910	952	931	952

* Instantaneous start-up current (maximum operating current of the smallest compressor(s) + locked rotor current or reduced start-up current of the largest compressor). Values based on standard Eurovent unit operating conditions: evaporator entering/leaving water temp. = 12°C/7°C, condenser entering/leaving water temp. = 30°C/35°C.

** Instantaneous start-up current (maximum operating current of the smallest compressor(s) + locked rotor current or reduced start-up current of the largest compressor). Values obtained at operation with maximum unit power input.

*** Values based on standard Eurovent unit operating conditions: evaporator entering/leaving water temp. = 12°C/7°C, condenser entering/leaving water temp. = 30°C/35°C.

**** Values obtained at operation with maximum unit power input.

† Values obtained at operation with maximum unit power input. Values given on the unit name plate.

Electrical data, units for high condensing temperatures

High-efficiency units (option 150)

30XWHP		512	562	712	812	862	1012	1162	1314	1464	1612	1762
Power circuit												
Nominal power supply	V-ph-Hz	400-3-50										
Voltage range	V	360-440										
Control circuit		24 V via the built-in transformer										
Nominal start-up current*												
Circuit A	A	587	587	772	772	772	587	587	772	772	772	772
Circuit B	A	-	-	-	-	-	587	587	587	772	772	772
Option 81	A	-	-	-	-	-	749	757	943	965	986	1004
Maximum start-up current**												
Circuit A	A	303	388	388	587	587	587	587	772	772	772	772
Circuit B	A	-	-	-	-	-	587	587	587	772	772	772
Option 81	A	-	-	-	-	-	862	887	1072	1172	1202	1232
Cosine phi												
Nominal***		0.88	0.88	0.84	0.86	0.87	0.87	0.88	0.86	0.85	0.86	0.87
Maximum****		0.91	0.92	0.90	0.90	0.90	0.91	0.92	0.91	0.91	0.91	0.91
Total harmonic distortion****	%	0	0	0	0	0	0	0	0	0	0	0
Maximum power input†												
Circuit A	kW	173	191	252	271	290	173	191	252	252	271	290
Circuit B	kW	-	-	-	-	-	173	191	191	252	271	290
Option 81	kW	-	-	-	-	-	346	382	443	504	542	580
Nominal current drawn***												
Circuit A	A	162	171	210	230	250	162	171	210	210	230	250
Circuit B	A	-	-	-	-	-	162	171	171	210	230	250
Option 81	A	-	-	-	-	-	324	342	381	420	460	500
Maximum current drawn (Un)†												
Circuit A	A	275	300	400	430	460	275	300	400	400	430	460
Circuit B	A	-	-	-	-	-	275	300	300	400	430	460
Option 81	A	-	-	-	-	-	550	600	700	800	860	920
Maximum current drawn (Un -10%)****												
Circuit A	A	300	330	419	455	476	300	330	419	419	455	476
Circuit B	A	-	-	-	-	-	300	330	330	419	455	476
Option 81	A	-	-	-	-	-	600	660	749	838	910	952

* Instantaneous start-up current (maximum operating current of the smallest compressor(s) + locked rotor current or reduced start-up current of the largest compressor). Values based on standard Eurovent unit operating conditions: evaporator entering/leaving water temp. = 12°C/7°C, condenser entering/leaving water temp. = 30°C/35°C.

** Instantaneous start-up current (maximum operating current of the smallest compressor(s) + locked rotor current or reduced start-up current of the largest compressor). Values obtained at operation with maximum unit power input.

*** Values based on standard Eurovent unit operating conditions: evaporator entering/leaving water temp. = 12°C/7°C, condenser entering/leaving water temp. = 30°C/35°C.

**** Values obtained at operation with maximum unit power input.

† Values obtained at operation with maximum unit power input. Values given on the unit name plate.

HEATING

Options

Options	No.	Description	Advantages	Use 30XWH
Medium-temperature brine solution	5	Implementation of new algorithms of control and evaporator redesign to allow chilled brine solution production down to -6°C when ethylene glycol is used (-3°C with propylene glycol)	Covers specific applications such as ice storage and industrial processes	Only sizes 512/562/1012/1154
Low-temperature brine solution	6	Implementation of new algorithms of control and evaporator redesign to allow chilled brine solution production down to -12°C when ethylene glycol is used (-8°C with propylene glycol)	Covers specific applications such as ice storage and industrial processes	Only sizes 512/562/1012/1154
Light-brine solution, down to -3°C	8	Implementation of new algorithms of control to allow chilled brine solution production down to -3°C when ethylene glycol is used (0°C with propylene glycol)	Matches with most application requirements for ground-sourced heat pumps and fits with many industrial processes requirements	254-1762
Unit supplied in two assembled parts	51	The unit is equipped with flanges that allow disassembly of the unit on site	Facilitates installation in plant rooms with limited access	Only sizes 1612/1652/1702/1762
Master/slave operation	58	Unit equipped with supplementary water outlet temperature sensor kit to be field-installed allowing master/slave operation of two units connected in parallel	Optimised operation of two chillers connected in parallel with operating time equalisation	254-1762
Single power connection point	81	Unit power connection via one main supply connection	Quick and easy installation	1002-1762
No disconnect switch, but short circuit protection	82A	Unit without disconnect switch, but with short-circuit protection device	Permits an external electrical disconnect system for the unit (field-supplied), while ensuring unit short circuit protection	254-1762
Evaporator pump electrical power / control circuit	84	Unit equipped with an electrical power and control circuit for one pump evaporator side	Quick and easy installation: the control of fixed speed pumps is embedded in the unit control	252-1252, 1314
Evaporator dual pumps electrical power / control circuit	84D	Unit equipped with an electrical power and control circuit for two pumps evaporator side	Quick and easy installation: the control of fixed speed pumps is embedded in the unit control	252-1252, 1314
Condenser pump electrical power / control circuit	84R	Unit equipped with an electrical power and control circuit for one pump condenser side	Quick and easy installation: the control of fixed speed pumps is embedded in the unit control	252-1252, 1314
Condenser insulation	86	Thermal condenser insulation	Minimizes thermal dispersions condenser side (key option for heat pump or heat recovery applications) and allows compliancy with special installation criteria (hot parts insulated)	254-1762
Service valve set	92	Liquid line valve (evaporator inlet) and compressor suction line valve	Allow isolation of various refrigerant circuit components for simplified service and maintenance	254-1762
Evaporator with one pass	100C	Evaporator with one pass on the water side. Evaporator inlet and outlet on opposite sides.	Easy to install, depending on site. Reduced pressure drops	254-1762
Condenser with one pass	102C	Condenser with one pass on the water side. Condenser inlet and outlet on opposite sides.	Easy to install, depending on site. Reduced pressure drops	254-1762
21 bar evaporator	104	Reinforced evaporator for extension of the maximum water-side service pressure to 21 bar (standard 10 bar)	Covers applications with a high water column evaporator side (typically high buildings)	254-1762
21 bar condenser	104A	Reinforced condenser for extension of the maximum water-side service pressure to 21 bar (standard 10 bar)	Covers applications with a high water column condenser side (typically high buildings)	254-1762
Reversed evaporator water connections	107	Evaporator with reversed water inlet/outlet	Easy installation on sites with specific requirements	254-1762
Reversed condenser water connections	107A	Condenser with reversed water inlet/outlet	Easy installation on sites with specific requirements	254-1762
JBus gateway	148B	Two-directional communication board complying with JBus protocol	Connects the unit by communication bus to a building management system	254-1762
LON gateway	148D	Two-directional communication board complying with Lon Talk protocol	Connects the unit by communication bus to a building management system	254-1762
Bacnet over IP gateway	149	Two-directional high-speed communication using BACnet protocol over Ethernet network (IP)	Easy and high-speed connection by ethernet line to a building management system. Allows access to multiple unit parameters	254-1762
High condensing temperature	150	Optimized compressor for operation at high condensing temperature	Increased condenser leaving water temperature up to 63°C. Allows applications with high condensing temperature (heat pumps, installations with not generously sized dry-coolers or more generally, installations with dry-coolers in hot climate). NOTE: to ensure control of the condenser leaving water temperature, this option must be fitted with 30XWH units.	254-1762

Options

Options	No.	Description	Advantages	Use 30XWH
Condensing temperature limitation	150B	Limitation of the maximum condenser leaving water temperature to 45°C	Reduced maximum power input and current absorption: power cables and protection elements can therefore be downsized	254-1762
Control for low condensing temperature systems	152	Output signal (0-10 V) to control the condenser water inlet valve	Simple installation: for applications with cold water at condenser inlet (ex. ground-source, groundwater-source, superficial water-source applications) the signal permits to control a 2 or 3-way valve to maintain condenser water temperature (and so condensing pressure) at acceptable values	254-1762
Energy Management Module EMM	156	Control board with additional inputs/outputs. See Energy Management Module option chapter	Extended remote control capabilities (Set-point reset, ice storage end, demand limits, boiler on/off command...)	254-1762
Touch Pilot control, 7" user interface	158A	Touch Pilot control supplied with a 7 inch colour touch screen user interface	Enhanced ease of use	254-1762
Leak detection	159	0-10 V signal to report any refrigerant leakage in the unit directly on the controlller (the leak detector itself must be supplied by the customer)	Immediate customer notification of refrigerant losses to the atmosphere, allowing timely corrective actions	254-1762
Compliance with Swiss regulations	197	Additional tests on the water heat exchangers: supply (additional of PED documents) supplementary certificates and test certifications	Conformance with Swiss regulations	254-1762
Compliance with Australian regulations	200	Unit approved to Australian code	Conformance with Australian regulations	254-1762
Low noise level	257	Evaporator and suction piping sound insulation	3 dB(A) quiter than standard unit	254-1762
Welded evaporator water connection kit	266	Victaulic piping connections with welded joints	Easy installation	254-1762
Welded condenser water connection kit	267	Victaulic piping connections with welded joints	Easy installation	254-1762
Flanged evaporator water connection kit	268	Victaulic piping connections with flanged joints	Easy installation	254-1762
Flanged condenser water connection kit	269	Victaulic piping connections with flanged joints	Easy installation	254-1762
Thermal compressor insulation	271	The compressor is covered with a thermal insulation layer	Prevents air humidity to condensate on the compressor surface	254-1762
230V electrical plug	284	230V AC power supply source provided with plug socket and transformer (180 VA, 0,8 Amps)	Permits connection of a laptop or an electrical device during unit commissioning or servicing	254-1762
Carrier Connect link (BSS regions only)	298	3G router board NOTE 1: require option 149 NOTE 2: when more than one machine is installed on site, only one of them shall be equipped with option 298 while all of them must be equipped with option 149 NOTE 3: if a CARRIER-PSM is on site, option 298 shall be integrated in the PSM while option 149 is still mandatory for each single unit.	Enabler for Carrier Connect service offer	254-1762

Accessories

Accessories	Description	Advantages	Use 30XWH
Very low noise level (-20 dB(A) compared to standard unit)	Sound absorbing cabinet for single-circuit units	Significantly quieter (-20 dB(A)) than a unit without this option	254-862
Very low noise level (-20 dB(A) compared to standard unit)	Sound absorbing cabinet for twin-circuit units	Significantly quieter (-20 dB(A)) than a unit without this option	1002-1252, 1352, 1452, 1552, 1314, 1464

Features and advantages

Low energy consumption

- Eurovent energy efficiency class "A"
- The high energy efficiency is reached through:
  - Twin-rotor screw compressor equipped with a high-efficiency motor and a variable capacity valve that permits exact matching of the cooling capacity to the load.
  - Flooded multi-pipe heat exchangers for increased heat exchange efficiency.
  - Electronic expansion device permitting operation at a lower condensing pressure and improved utilisation of the evaporator heat exchange surface.
  - Economizer system with electronic expansion device for increased cooling capacity (30XW-P).

Low operating sound levels

- Standard unit features include:
  - Silencers on the compressors discharge line.
  - Silencers on the economiser return line.
  - Acoustic insulation on the components that are most subjected to radiated noise.
  - Option 257 further reduces the global unit sound level.

Easy and fast installation

- Compact design
  - The 30XW units are designed to offer the most compact dimensions on the market.
  - With a width of approximately 1 m up to 1600 kW the units can pass through standard door openings and only require minimum floor space in the plant room.

Compact, accessible unit - side view - sizes up to 1600 KW

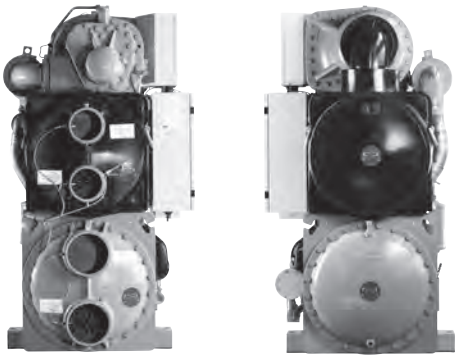

- Simplified electrical connections
  - Main disconnect switch with high trip capacity
  - Transformer to supply the integrated control circuit (400/24 V)
- Simplified hydronic connections
  - Victaulic connections on the evaporator and condenser
  - Practical reference marks for entering and leaving water connections
  - Possibility to reverse the heat exchanger water inlet and outlet at the factory
  - Possibilty to modify the number of heat exchanger passes
- Fast commissioning
  - Systematic factory operation test before shipment
  - Quick-test function for step-by-step verification of the instruments, expansion devices and compressors.

Environmentally balanced

- R-134a refrigerant
  - HFC refrigerant with zero ozone depletion potential
- Leak-tight refrigerant circuit
  - Reduction of leaks as no capillary tubes and flare connections are used
  - Verification of pressure transducers and temperature sensors without transferring refrigerant charge
  - Discharge line shut-off valve and liquid line service valve for simplified maintenance.

High reliability and easy servicing

- The 30XW units offer increased global performance as well as Carrier's acclaimed product quality and reliability.
- Major components are selected and tested to minimize failures possibility, as well as many design choices have been taken in this perspective.
- Screw compressors
  - Industrial-type screw compressors with oversized bearings and motor cooled by suction gas.
  - All compressor components are easily accessible on site minimising down-time.
- Refrigerant circuit
  - Two independent refrigerant circuits (from 1000 kW upwards); the second one automatically takes over, if the first one develops a fault, maintaining partial cooling under all circumstances.
- Evaporator
  - Electronic paddle-free flow switch. Auto-setting according to cooler size and fluid type.
- Auto-adaptive control
  - Control algorithm prevents excessive compressor cycling (Carrier patent)
  - Automatic compressor unloading in case of abnormally high condensing pressure.
- Exceptional endurance tests
  - Partnerships with specialised laboratories and use of limit simulation tools (finite element calculation) for the design of critical components.
  - Transport simulation test in the laboratory on a vibrating table and then on an endurance circuit (based on a military standard).

06T screw compressor

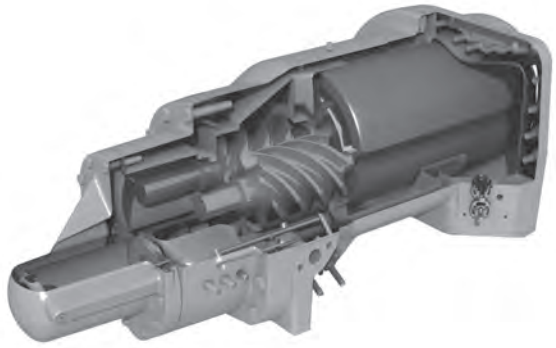

The new generation of the Carrier 06T screw compressors benefits from Carrier's long experience in the development of twin-rotor screw compressors. The compressor is equipped with bearings with oversized rollers, oil pressure lubricated for reliable and durable operation, even at maximum load.

A variable control valve controlled by the oil pressure permits infinitely variable cooling capacity. This system allows optimal adjustment of the compressor cooling capacity and ensures exceptionally high stability of the chilled water leaving temperature.

Among the other advantages: if a fault occurs e.g. if the condenser is fouled or at very high water temperature, the compressor does not switch off, but continues operation with a reduced capacity (unloaded mode).

The silencer in the discharge line considerably reduces discharge gas pulsations for much quieter operation.

The condenser includes an oil separator that minimises the amount of oil in circulation in the refrigerant circuit and re-directs it to the compressor function.

Controls

Touch Pilot Control

Touch Pilot control, 5" user interface

- New innovative smart control features:
  - An intuitive and user-friendly, coloured, 5'' interface (7" optional)
  - Direct access to the unit's technical drawings and the main service documents
  - Screen-shots with coincisive and clear information in local languages
  - Complete menu, customised for different users (end user, service personnel and Carrier-factory technicians)
  - Easy access to the controller box with inclined touch screen mounting to ensure legibility under any lighting conditions
  - Safe operation and unit setting: password protection ensures that unauthorised people cannot modify any advanced parameters
  - Simple and "smart" intelligence uses data collection from the constant monitoring of all machine parameters to optimise unit operation.
- Energy management:
  - Internal time schedule clock controls chiller on/off times and operation at a second set-point
  - The DCT (Data Collection Tool) records the alarms history to simplify and facilitate service operations.

Remote Management (Standard)

- Units with Touch Pilot control can be easily accessed from the internet, using a PC with an Ethernet connection. This makes remote control quick and easy and offers significant advantages for service operations.
- The 30XW also communicates with other building management systems via optional communication gateways.
- The 30XW is equipped with an RS485 serial port that offers multiple remote control, monitoring and diagnostic possibilities. Carrier offers a vast choice of control products, specially designed to control, manage and supervise the operation of an air conditioning system. Please consult your Carrier representative for more information.
- The following commands/visualisations are possible from remote connection:
  - Condenser pumps control: a digital input allows verification of condenser water flow (the flow switch must be supplied by the installer)
  - Start/stop of the machine
  - Dual set-point management: through a dedicated contact is possible to activate a second set-point (example: unoccupied mode)
  - Demand limit setting: to limit the maximum chiller capacity to a predefined value
  - Operation visualization: indication if the unit is operating or if it's in stand-by (no cooling load)
  - Alarm visualization.

Remote management (EMM option)

- The Energy Management Module offers extended remote control possibilities:
  - Room temperature: permits set-point reset based on the building indoor air temperature (with Carrier thermostat)
  - Set point reset: ensures reset of the cooling set-point based on a 4-20 mA or 0-10 V signal
  - Demand limit: permits limitation of the maximum chiller power or current based on a 0-10 V signal
  - Demand limit 1 and 2: closing of these contacts limits the maximum chiller power or current to two predefined values
  - User safety: this contact can be used for any customer safety loop; opening of the contact generates a specific alarm
  - Ice storage end: when ice storage has finished, this input permits return to the second set-point (unoccupied mode)
  - Time schedule override: closing of this contact cancels the time schedule effects
  - Out of service: this signal indicates that the chiller is completely out of service
  - Chiller capacity: this analogue output (0-10 V) gives an immediate indication of the chiller capacity
  - Alert indication: this volt-free contact indicates the necessity to carry out a maintenance operation or the presence of a minor fault.

Operating limits

Units with option 150

30XW--/30XWH-/30XW-P/30XWHP	Minimum	Maximum
Evaporator		
Entering temperature at start-up	-	35.0°C
Leaving temperature during operation	3.3°C*	15.0°C
Entering/leaving temperature difference at full load	2.8 K	11.1 K
Condenser		
Entering temperature at start-up	13.0°C**	-
Leaving temperature during operation	23.0°C**	63.0°C
Entering/leaving temperature difference at full load	2.8 K	11.1 K

* For low-temperature applications, where the leaving water temperature is below 3.3°C, a frost protection solution must be used. Please refer to option 5 and option 6.
** For lower condenser temperatures, a water flow control valve must be used at the condenser (two or three-way valve). Please refer to option 152 to ensure the correct condensing temperature.

Standard units

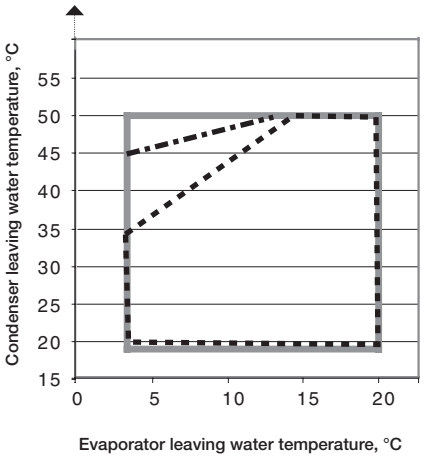

From approx. 45% to full load

Part load limit approx. 35%

Minimum load limit approx. 15%

Option 150

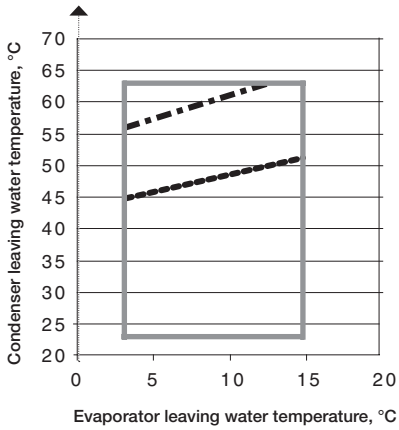

From approx. 60% to full load

Part load limit approx. 50%

Minimum load limit approx. 30%

Evaporator pressure drop curves

Units with two evaporator passes (standard): 30XWH-/30XWHP

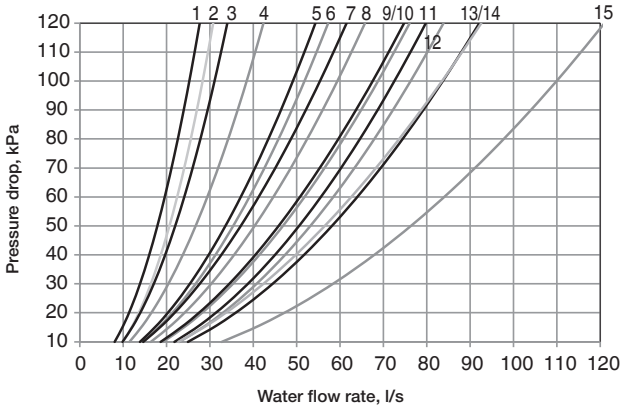

Legend

1. 254
2. 304
3. 354
4. 402, 452, 552, 602
5. 512, 562
6. 652, 702, 802
7. 852
8. 1002, 1052
9. 1154
10. 712, 812, 862
11. 1012,1162
12. 1252, 1352, 1452, 1552
13. 1314, 1464
14. 1652, 1702
15. 1612, 1762

Units with one evaporator pass (option 100C): 30XWH-/30XWHP

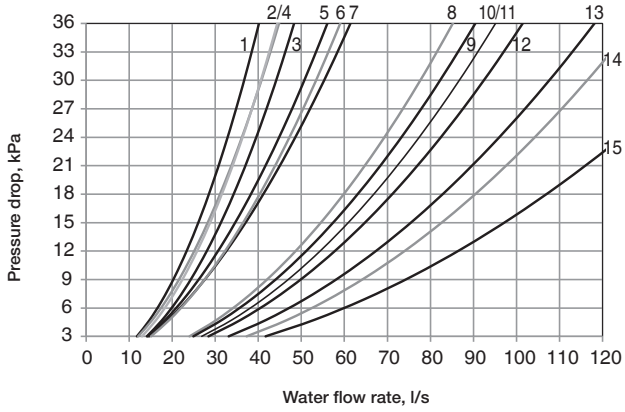

Legend

1. 254
2. 304
3. 354
4. 402, 452, 552, 602
5. 512, 562
6. 652, 702, 802
7. 852
8. 1002, 1052
9. 1012,1162
10. 712, 812, 862
11. 1252, 1352, 1452, 1552
12. 1154
13. 1314, 1464
14. 1652, 1702
15. 1612, 1762

Condenser pressure drop curves

Units with two condenser passes (standard): 30XWH-/30XWHP

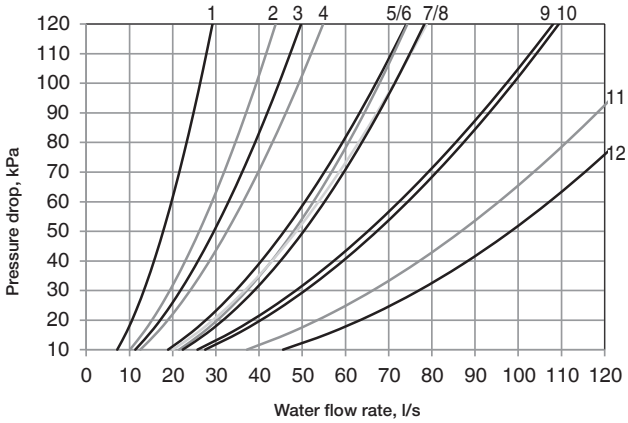

Legend

1. 254, 304, 354
2. 402, 452, 552, 602
3. 512, 562
4. 652, 702, 802
5. 712, 812, 862
6. 852
7. 1154
8. 1002, 1052
9. 1012,1162
10. 1252, 1352, 1452, 1552, 1314, 1464
11. 1652, 1702
12. 1612, 1762

Units with one condenser pass (option 102C): 30XWH-/30XWHP

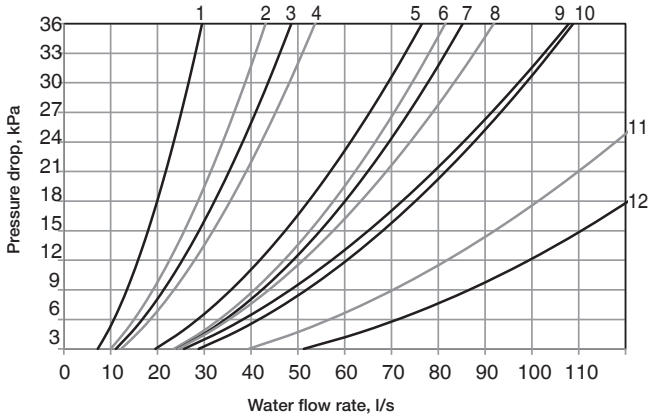

Legend

1. 254, 304, 354
2. 402, 452, 552, 602
3. 512, 562
4. 652, 702, 802
5. 712, 812, 862
6. 852
7. 1002, 1052
8. 1154
9. 1012,1162
10. 1252, 1352, 1452, 1552, 1314, 1464
11. 1652, 1702
12. 1612, 1762

Dimensions/clearances

30XWH- 254-852
30XWHP 512-862

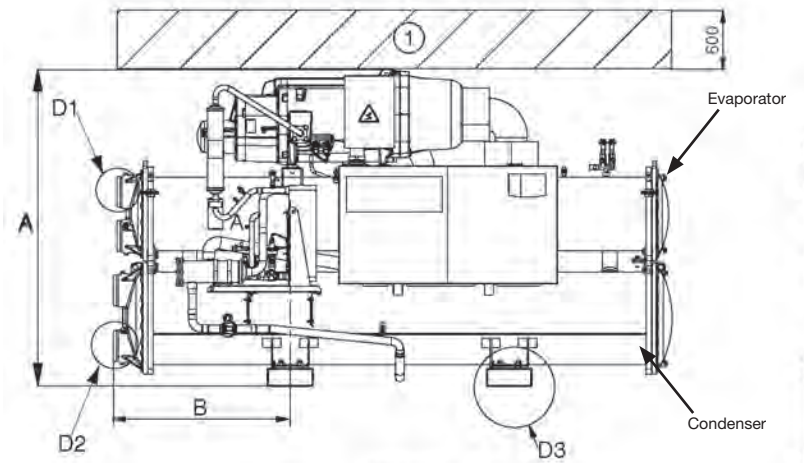

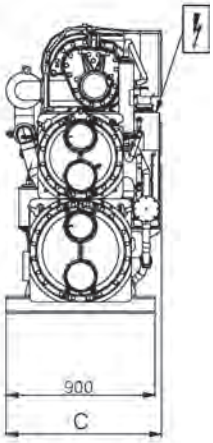

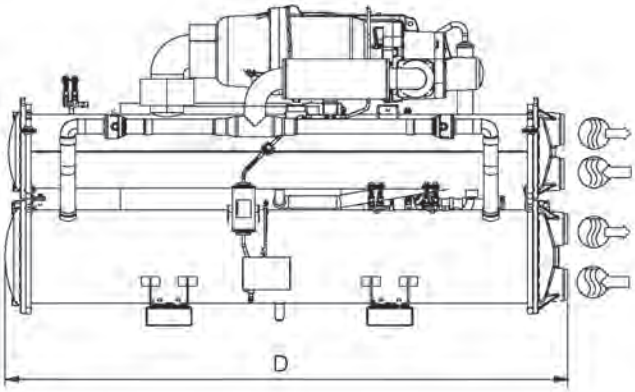

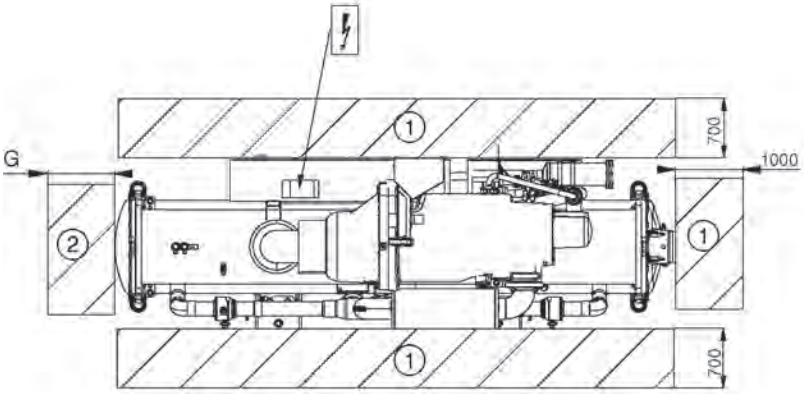

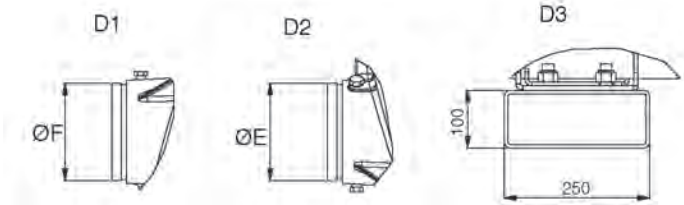

	Dimensions in mm						
	A	B	C	D	E	F	G
Standard-efficiency units 30XWH-							
254	1567	800	928	2724	141.3	141.3	2600
304	1567	800	928	2724	141.3	141.3	2600
354	1567	800	928	2724	141.3	141.3	2600
402	1693	810	936	2742	141.3	141.3	2600
452	1693	810	936	2742	141.3	141.3	2600
552	1693	810	936	2742	141.3	141.3	2600
602	1693	810	936	2742	141.3	141.3	2600
652	1848	968	1044	3059	168.3	168.3	2800
702	1848	968	1044	3059	168.3	168.3	2800
802	1848	968	1044	3059	168.3	168.3	2800
852	1898	828	1044	2780	219.1	168.3	2600
High-efficiency units 30XWHP							
512	1743	968	936	3059	168.3	168.3	2800
562	1743	968	936	3059	168.3	168.3	2800
712	1950	1083	1065	3290	219.1	219.1	3100
812	1950	1083	1070	3290	219.1	219.1	3100
862	1950	1083	1070	3290	219.1	219.1	3100
Standard-efficiency units 30XWH- (option 150)							
254	1567	800	928	2724	141.3	141.3	2600
304	1567	800	928	2724	141.3	141.3	2600
354	1567	800	928	2724	141.3	141.3	2600
402	1693	810	936	2742	141.3	141.3	2600
452	1693	810	936	2742	141.3	141.3	2600
552	1693	810	936	2742	141.3	141.3	2600
602	1693	810	936	2742	141.3	141.3	2600
652	1868	968	1090	3059	168.3	168.3	2800
702	1868	968	1090	3059	168.3	168.3	2800
802	1868	968	1090	3059	168.3	168.3	2800
852	1920	828	1090	2780	168.3	219.1	2600
High-efficiency units 30XWHP (option 150)							
512	1743	968	936	3059	168.3	168.3	2800
562	1743	968	936	3059	168.3	168.3	2800
712	1970	1083	1105	3290	219.1	219.1	3100
812	1970	1083	1105	3290	219.1	219.1	3100
862	1970	1083	1105	3290	219.1	219.1	3100

Legend:

All dimensions are in mm.

(1) Required clearance for maintenance

(2) Recommended clearance for tube removal

Water inlet

Water outlet

Power supply connection

Note: Drawings are not contractually binding. Before designing an installation, consult the certified dimensional drawings, available on request.

30XWH- 1002-1552
30XWHP 1012-1464

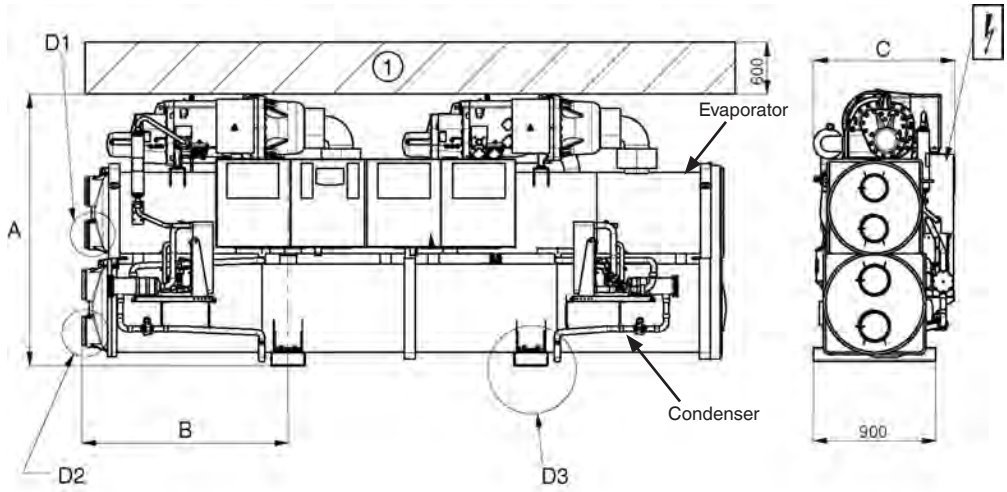

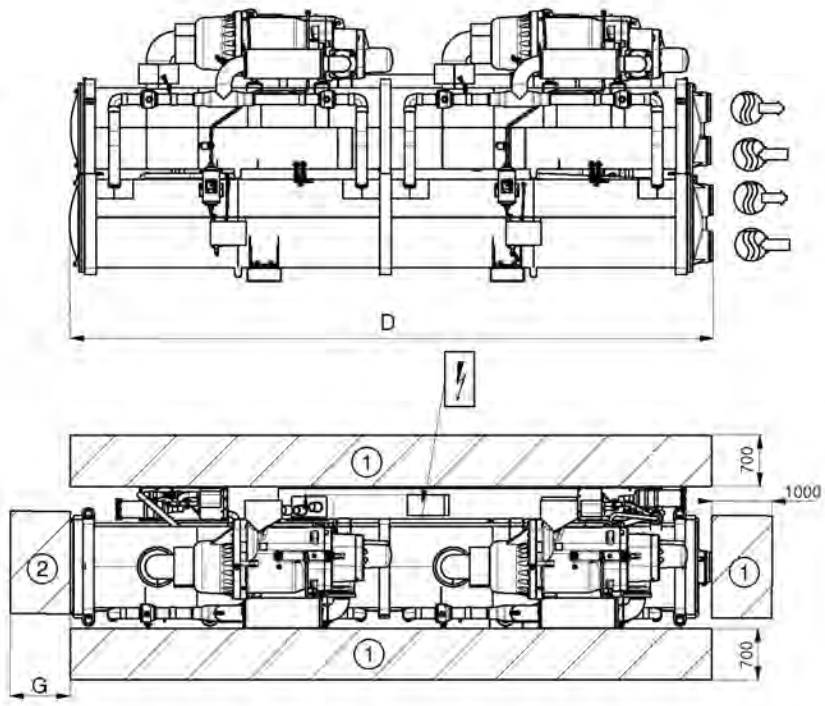

	Dimensions in mm						
	A	B	C	D	E	F	G
Standard-efficiency units 30XWH-							
1002	1870	950	1036	4025	219.1	168.3	3800
1052	1870	950	1036	4025	219.1	168.3	3800
1152	1925	950	1036	4025	219.1	219.1	3800
1252	2051	1512	1162	4730	219.1	219.1	4500
1352	2051	1512	1162	4730	219.1	219.1	4500
1452	2051	1512	1162	4730	219.1	219.1	4500
1552	2051	1512	1162	4730	219.1	219.1	4500
High-efficiency units 30XWHP							
1012	1997	1512	1039	4730	219.1	219.1	4500
1162	1997	1512	1039	4730	219.1	219.1	4500
1314	2051	1512	1162	4730	219.1	219.1	4500
1464	2051	1512	1162	4730	219.1	219.1	4500
Standard-efficiency units 30XWH- (option 150)							
1002	1870	950	1036	4025	219.1	168.3	3800
1052	1870	950	1036	4025	219.1	168.3	3800
1154	2925	950	1036	4025	219.1	219.1	3800
1252	2071	1512	1202	4730	219.1	219.1	4500
1352	2071	1512	1202	4730	219.1	219.1	4500
1452	2071	1512	1202	4730	219.1	219.1	4500
1552	2071	1512	1202	4730	219.1	219.1	4500
High-efficiency units 30XWHP (option 150)							
1012	1997	1512	1039	4730	219.1	219.1	4500
1162	1997	1512	1039	4730	219.1	219.1	4500
1314	2071	1512	1202	4730	219.1	219.1	4500
1464	2071	1512	1202	4730	219.1	219.1	4500

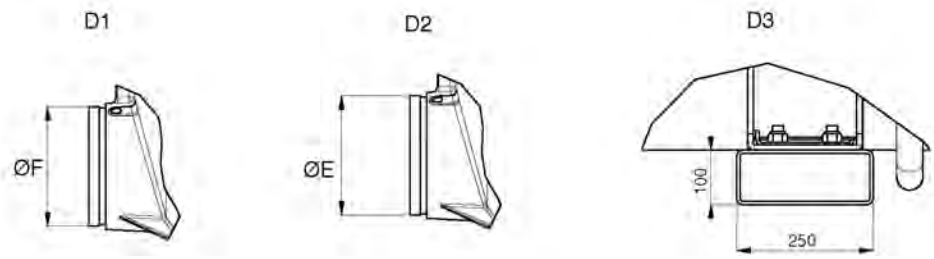

Note: Drawings are not contractually binding. Before designing an installation, consult the certified dimensional drawings, available on request.

Legend:

All dimensions are in mm.

1 Required clearance for maintenance

2 Recommended clearance for tube removal

Water inlet

Water outlet

Power supply connection

30XW-- 1652-1702
30XW-P 1612-1762

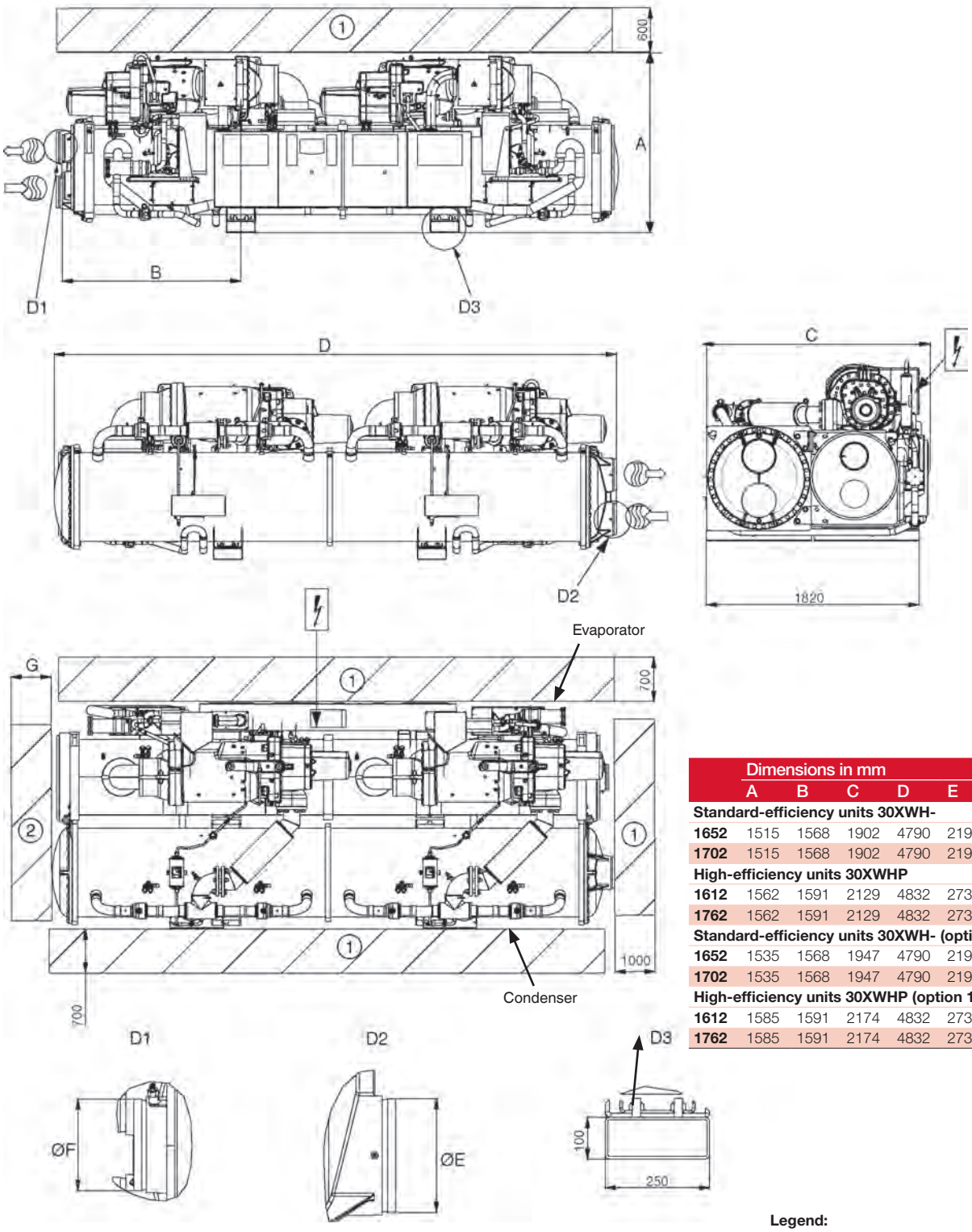

	Dimensions in mm						
	A	B	C	D	E	F	G
Standard-efficiency units 30XWH-							
1652	1515	1568	1902	4790	219.1	219.1	4500
1702	1515	1568	1902	4790	219.1	219.1	4500
High-efficiency units 30XWHP							
1612	1562	1591	2129	4832	273.1	273.1	4600
1762	1562	1591	2129	4832	273.1	273.1	4600
Standard-efficiency units 30XWH- (option 150)							
1652	1535	1568	1947	4790	219.1	219.1	4500
1702	1535	1568	1947	4790	219.1	219.1	4500
High-efficiency units 30XWHP (option 150)							
1612	1585	1591	2174	4832	273.1	273.1	4600
1762	1585	1591	2174	4832	273.1	273.1	4600

Legend:

All dimensions are in mm.

1 Required clearance for maintenance

2 Recommended clearance for tube removal

Water inlet

Water outlet

Power supply connection

Note: Drawings are not contractually binding. Before designing an installation, consult the certified dimensional drawings, available on request.

30XWHV

Nominal heating capacity 648-1932 kW
Nominal cooling capacity 587-1741 kW

HEATING

greenspeed AQUAFORCE

High efficiency, especially at part load

Reliability

Adaptability

Low inrush current, high cos(phi)

The 30XWHV water-sourced units are the premium solution for commercial and industrial applications where installers, consultants and building owners require maximum quality and optimal performances, especially at part load.

The 30XWHV units are designed to meet current and future requirements in terms of energy efficiency, versatility and compactness. They feature exclusive inverter-driven screw compressors - an evolution of the proven traditional Carrier twin-rotor screw compressor design. Other features include:

- The new Touch Pilot control
- Mechanically cleanable flooded heat exchangers
- Refrigerant R-134a

The 30XWHV range for heating applications.

As standard, the unit can provide an evaporator leaving water temperature down to 3.3°C, and when operating as a heat pump, it can deliver up to 50°C on the condenser side.

Physical data

30XWHV		580	630	810	880	1150	1280	1470	1570	1710
Heating										
Heating application as per EN14511-3:2013† - standard unit										
Condition 1										
Heating capacity	kW	649	719	890	974	1261	1428	1594	1761	1932
COP	kW/kW	4.64	4.53	4.56	4.43	4.62	4.61	5	4	4
Eurovent class heating	-	A	A	A	B	A	A	-	-	-
Heating application application †† - standard unit										
Condition 1										
Heating capacity	kW	646	716	887	970	1257	1423	1587	1753	1922
COP	kW/kW	4.84	4.75	4.75	4.63	4.87	4.93	4.92	4.70	4.56
Heating application as per EN14511-3:2013† - standard unit										
Condition 2										
Heating capacity	kW	687	767	956	1021	1335	1524	1712	1898	2067
COP	kW/kW	6.15	5.98	5.96	5.81	6.05	6.00	5.82	5.49	5.34
Eurovent class heating	-	A	A	A	A	A	A	-	-	-
Heating application application †† - standard unit										
Condition 2										
Heating capacity	kW	685	763	953	1017	1331	1519	1705	1889	2055
COP	kW/kW	6.59	6.49	6.39	6.25	6.61	6.72	6.66	6.33	6.27
Sound levels - standard units										
Sound power level*	dB(A)	105	105	105	105	106	106	106	106	106
Sound pressure level at 1 m**	dB(A)	87	87	87	87	87	87	87	87	87
Sound levels - standard unit + option 257* **										
Sound power level*	dB(A)	102	102	102	102	103	103	103	103	103
Sound pressure level at 1 m**	dB(A)	84	84	84	84	84	84	84	84	84
Dimensions - standard unit										
Length	mm	3059	3059	3290	3290	4730	4730	4730	4730	4730
Width	mm	1087	1087	1237	1237	1164	1164	1255	1255	1255
Height	mm	1743	1743	1950	1950	1997	1997	2051	2051	2051
Operating weight****	kg	3152	3190	4157	4161	7322	7398	7574	7770	7808
Compressors		Semi-hermetic 06T screw compressor, 60 r/s								
Circuit A	-	1	1	1	1	1	1	1	1	1
Circuit B	-	-	-	-	-	1	1	1	1	1
Refrigerant - standard unit** **		R-134a								
Circuit A	kg	130	130	180	175	120	120	115	115	110
Circuit B	kg	-	-	-	-	120	120	120	115	110
Global Warming Potential (GWP)										
Tonnes of equivalent CO_2 of greatest circuit	tonnes	186	186	257	250	172	172	172	164	157
Capacity control		Touch Pilot, inverter-driven compressor, electronic expansion valve (EXV)								
Minimum capacity	%	20	20	20	20	10	10	10	10	10
Evaporator		Multi-tube type flooded								
Water volume	l	106	106	154	154	297	297	297	297	297
Water connections (Victaulic)	inch	6	6	8	8	8	8	8	8	8
Drain and vent connections (NPT)	inch	3/8	3/8	3/8	3/8	3/8	3/8	3/8	3/8	3/8
Maximum water-side operating pressure	kPa	1000	1000	1000	1000	1000	1000	1000	1000	1000
Condenser		Multi-tube type flooded								
Net water volume	l	112	112	165	165	340	340	340	340	340
Water connections (Victaulic)	inch	6	6	8	8	8	8	8	8	8
Drain and vent connections (NPT)	inch	3/8	3/8	3/8	3/8	3/8	3/8	3/8	3/8	3/8
Maximum water-side operating pressure	kPa	1000	1000	1000	1000	1000	1000	1000	1000	1000
Chassis paint colour		Colour code: RAL7035								

† Eurovent-certified performances in accordance with standard EN14511-3:2013.

†† Gross performances, not in accordance with EN14511-3:2013. These performances do not take into account the correction for the proportionnal heating capacity and power input generated by the water pump to overcome the internal pressure drop in the heat exchanger.
Condition 1: Cooling mode conditions, evaporator water entering/leaving temperature 12°C/7°C, condenser water entering/leaving temperature 30°C/35°C, evaporator fouling factor 0m².K/W.
Condition 2: Conditions in cooling mode: evaporator water entering/leaving temperature 23°C/18°C, condenser water entering/leaving temperature 30°C/35°C, evaporator/condenser fouling factor 0m².K/W.

* In dB ref=10^{-12} W, (A) weighting. Declared dualnumber noise emission values in accordance with ISO 4871 (with an associated uncertainty of +/-3dB(A)). Measured in accordance with ISO 9614-1 and certified by Eurovent.

** In dB ref 20µPa, (A) weighting. Declared dualnumber noise emission values in accordance with ISO 4871 (with an associated uncertainty of +/-3dB(A)). For information, calculated from the sound power level Lw(A).

*** Option 257 = Low noise level.

**** Weight shown is guideline only. Please refer to the unit nameplate.

Eurovent certified data

Electrical data

30XWHV		580	630	810	880	1150	1280	1470	1570	1710
Power circuit										
Nominal voltage	V-ph-Hz	400-3-50 ± 10%								
Control circuit supply		24 V, via internal transformer								
Start-up current*		Negligible (lower than maximum current drawn)								
Maximum power factor		0.91-0.93	0.91-0.93	0.91-0.93	0.91-0.93	0.91-0.93	0.91-0.93	0.91-0.93	0.91-0.93	0.91-0.93
Maximum power input, circuit A/B***	kW	155/-	193/-	222/-	246/-	155/155	193/193	222/193	222/222	246/246
Eurovent current draw, circuit A/B**	A	175/-	200/-	240/-	265/-	175/175	200/200	240/200	240/240	265/265
Maximum current draw (Un), circuit A/B***	A	270/-	330/-	380/-	421/-	270/270	330/330	380/330	380/380	421/421

* Instantaneous start-up current.
** Eurovent unit operating conditions: evaporator entering/leaving water temperature 12°C/7°C, condenser entering/leaving water temperature 30°C/35°C.
*** Values obtained at operation with maximum unit power input. Values given on the unit name plate.

Options

Options	No.	Description	Advantages	Use 30XWHV
Light-brine solution, down to -3°C	8	Implementation of new algorithms of control to allow chilled brine solution production down to -3°C when ethylene glycol is used (0°C with propylene glycol)	Matches with most application requirements for ground-sourced heat pumps and fits with many industrial processes requirements	580-1710
Master/slave operation	58	Unit equipped with supplementary water outlet temperature sensor kit to be field-installed allowing master/slave operation of two units connected in parallel	Optimised operation of two chillers connected in parallel with operating time equalisation	580-1710
Single power connection point	81	Unit power connection via one main supply connection	Quick and easy installation	1150-1710
Evap. pump power/control circuit	84	Unit equipped with an electrical power and control circuit for one pump evaporator side	Quick and easy installation: the control of fixed speed pumps is embedded in the unit control	580-1710
Evaporator dual pumps electrical power / control circuit	84D	Unit equipped with an electrical power and control circuit for two pumps evaporator side	Quick and easy installation: the control of fixed speed pumps is embedded in the unit control	580-1710
Cond. pump power/control circuit	84R	Unit equipped with an electrical power and control circuit for one pump condenser side	Quick and easy installation: the control of fixed speed pumps is embedded in the unit control	580-1710
Cond. dual pumps power/control circuit	84T	Unit equipped with an electrical power and control circuit for two pumps condenser side	Quick and easy installation: the control of fixed speed pumps is embedded in the unit control	580-1710
Condenser insulation	86	Thermal condenser insulation	Minimizes thermal dispersions condenser side (key option for heat pump or heat recovery applications) and allows compliancy with special installation criteria (hot parts insulated)	580-1710
Service valve set	92	Liquid line valve (evaporator inlet) and compressor suction line valve	Allow isolation of various refrigerant circuit components for simplified service and maintenance	580-1710
Evaporator with one pass less	100C	Evaporator with one pass on the water side. Evaporator inlet and outlet on opposite sides.	Easy to install, depending on site. Reduced pressure drops	580-1710
Condenser with one pass less	102C	Condenser with one pass on the water side. Condenser inlet and outlet on opposite sides.	Easy to install, depending on site. Reduced pressure drops	580-1710
21 bar evaporator	104	Reinforced evaporator for extension of the maximum water-side service pressure to 21 bar (standard 10 bar)	Covers applications with a high water column evaporator side (typically high buildings)	580-1710
21 bar condenser	104A	Reinforced condenser for extension of the maximum water-side service pressure to 21 bar (standard 10 bar)	Covers applications with a high water column condenser side (typically high buildings)	580-1710
Reversed evaporator water connections	107	Evaporator with reversed water inlet/outlet	Easy installation on sites with specific requirements	580-1710
Reversed condenser water connections	107A	Condenser with reversed water inlet/outlet	Easy installation on sites with specific requirements	580-1710
JBus gateway	148B	Two-directional communication board complying with JBus protocol	Connects the unit by communication bus to a building management system	580-1710
LON gateway	148D	Two-directional communication board complying with LON protocol	Connects the unit by communication bus to a building management system	580-1710

Options	No.	Description	Advantages	Use 30XWHV
Bacnet over IP gateway	149	Two-directional high-speed communication using BACnet protocol over Ethernet network (IP)	Easy and high-speed connection by ethernet line to a building management system. Allows access to multiple unit parameters	580-1710
Condensing temperature limitation	150B	Limitation of the maximum condenser leaving water temperature to 45°C	Reduced maximum power input and current absorption: power cables and protection elements can therefore be downsized	580-1710
Control for low condensing temperature systems	152	Output signal (0-10 V) to control the condenser water inlet valve	Simple installation: for applications with cold water at condenser inlet (ex. ground-source, groundwater-source, superficial water-source applications) the signal permits to control a 2 or 3-way valve to maintain condenser water temperature (and so condensing pressure) at acceptable values	580-1710
Energy Management Module EMM	156	Control board with additional inputs/ outputs. See Energy Management Module option chapter	Extended remote control capabilities (Set-point reset, ice storage end, demand limits, boiler on/off command...)	580-1710
Leak detection	159	0-10 V signal to report any refrigerant leakage in the unit directly on the controlller (the leak detector itself must be supplied by the customer)	Immediate customer notification of refrigerant losses to the atmosphere, allowing timely corrective actions	580-1710
Compliance with Swiss regulations	197	Additional tests on the water heat exchangers: supply (additional of PED documents) supplementary certificates and test certifications	Conformance with Swiss regulations	580-1710
Low noise level	257	Evaporator and suction piping sound insulation	3 dB(A) quiter than standard unit	580-1710
Welded evaporator water connection kit	266	Victaulic piping connections with welded joints	Easy installation	580-1710
Welded condenser water connection kit	267	Victaulic piping connections with welded joints	Easy installation	580-1710
Flanged evaporator water connection kit	268	Victaulic piping connections with flanged joints	Easy installation	580-1710
Flanged condenser water connection kit	269	Victaulic piping connections with flanged joints	Easy installation	580-1710
Thermal compressor insulation	271	The compressor is covered with a thermal insulation layer	Prevents air humidity to condensate on the compressor surface	580-1710
EMC classification C2, as per EN 61800-3	282	Additional RFI filters on the unit power line	Reduces electromagnetic interferences. Increase the variable frequency drive (VFD) immunity level according to first environment (so called, residential environment) requirements and allow its compliancy with emissions level required in category C2	580-1710
Fast Capacity Recovery	QM295	New software algorithms to allow quick restart and fast loading while preserving unit-reliability	Full capacity recovery in less than 5 minutes after power failure. Matches requirements of typical critical missions applications	580-1710
Carrier Connect link (BSS regions only)	298	3G router board NOTE 1: Require option 149 NOTE 2: When more than one machine is installed on site, only one of them shall be equipped with option 298 while all of them must be equipped with option 149 NOTE 3: If a CARRIER-PSM is on site, option 298 shall be integrated in the PSM while option 149 is still mandatory for each single unit.	Enabler for Carrier Connect service offer	580-1710

Features and advantages

Low energy consumption

- The 30XWHV was designed for high performance both at full load and at part load. Exceptional ESEER values set new benchmarks for low energy consumption.
  - Eurovent energy class A
  - Eurovent certified values per EN14511-3:2011
- High energy efficiency
  - Inverter-driven twin-rotor screw compressors allow precise capacity matching of building load changes and signifi-cantly reduce unit power input, especially at part-load.
  - Flooded multi-pipe heat exchangers for increased heat exchange efficiency.
  - Electronic expansion device permits operation at a lower condensing pressure and improved utilisation of the evaporator heat exchange surface.
- Optimised electrical performance
  All 30XWHV units comply with class 3 of standard EN61800-3. Category C3 refers to industrial environments. With option 282 category C2 compliance is possible.
  - Inverter-driven motors ensure negligible start-up current (value is lower than the maximum unit current draw)

Designed to support green building design

- Design teams increasingly focus on designing "green buildings" to address today's energy efficiency and environmental sustainability needs. The air conditioning system uses between 30% and 40% of the annual building energy consumption. Selection of the right air conditioning unit is one the main aspects to consider when designing a green building. For buildings with a variable load throughout the year 30XWHV units offer the solution to this important challenge.

High reliability

- Inverter-driven screw compressors
  - Industrial-type screw compressors with oversized bearings and motor cooled by suction gas.
  - The inverter is optimised for each compressor motor to ensure reliable operation and easy maintenance.
  - All compressor components are easily accessible on site minimising down-time.
- Refrigerant circuits
  - Two independent refrigerant circuits (from 1000 kW upwards); the second one automatically takes over, if the first one develops a fault, maintaining partial cooling under all circumstances.
- Evaporator
  - Electronic paddle-free flow switch. Auto-setting according to cooler size and fluid type.
- Auto-adaptive control
  - Control algorithm prevents excessive compressor cycling
  - Automatic compressor unloading in case of abnormally high condensing pressure or discharge temperature.
- Exceptional endurance tests
  - Partnerships with specialised laboratories and use of limit simulation tools (finite element calculation) for the design of critical components.
  - Transport simulation test in the laboratory on a vibrating table and then on an endurance circuit (based on a military standard).

Easy and fast installation

- Compact design
  - The 30XWHV units are designed to offer compact dimensions for easy installation.
  - With a width of approximately 1.25 m up to 1000 kW the units can pass through standard door openings and only require minimum floor space in the plant room.
- Simplified electrical connections
  - Main disconnect switch with high trip capacity
  - Transformer supply to the integrated control circuit (400/24 V)
- Simplified water connections
  - Victaulic connections on the evaporator and condenser
  - Practical reference marks for entering and leaving water connections
  - Possibility to reverse the heat exchanger water inlet and outlet at the factory
  - Possibilty to modify the number of heat exchanger passes
- Fast commissioning
  - Systematic factory operation test before shipment
  - Quick-test function for step-by-step verification of the instruments, expansion devices and compressors.

Minimised operating sound levels

- The inverter technology used for the compressor motors minimises noise levels at part load operation. In two-compressor units at 25% of the maximum load the unit sound power level is reduced by 10 dB(A).
- Standard unit features include:
  - Silencers on the compressor discharge line.
  - Sound insulation on the components that are most subjected to radiated noise.
- Option 257 further reduces the global unit sound level.

New inverter-driven Thunderbolt screw compressor

- The new generation of Carrier inverter-driven screw compressors benefits from Carrier's long experience in the development of twin-rotor screw compressors. The design of the Thunderbolt compressors is based on the successful 06T screw compressors.

- Advanced control algorithms combine inverter frequency output with motor input logic to minimise mechanical part stress, resulting in best compression performance and high chiller reliability. The compressor is equipped with bearings with oversized rollers, oil pressure lubricated for reliable and durable operation, even at maximum load.
- Other advantages:
  - If a fault occurs e.g. if the condenser is fouled or at very high water temperature, the compressor does not switch off, but continues operation at reduced capacity (unloaded mode).
  - The silencer in the discharge line considerably reduces discharge gas pulsations for much quieter operation.
  - The condenser includes an oil separator that minimises the amount of oil in circulation in the refrigerant circuit and re-directs it to the compressor function.

Environmentally balanced

- R-134a refrigerant
  - HFC-refrigerant with zero ozone depletion potential
- Leak-tight refrigerant circuit
  - Reduction of leaks as no capillary tubes and flare connections are used
  - Verification of pressure transducers and temperature sensors without transferring refrigerant charge
  - Discharge line shut-off valve and liquid line service valve for simplified maintenance.

Remote management (EMM option)

The Energy Management Module offers extended remote control possibilities:

- Room temperature: permits set-point reset based on the building indoor air temperature (with Carrier thermostat)
- Set point reset: ensures reset of the cooling set-point based on a 4-20 mA or 0-10 V signal
- Demand limit: permits limitation of the maximum chiller power or current based on a 0-10 V signal
- Demand limit 1 and 2: closing of these contacts limits the maximum chiller power or current to two predefined values
- User safety: this contact can be used for any customer safety loop; opening the contact generates a specific alarm
- Ice storage end: when ice storage has finished, this input permits return to the second set-point (unoccupied mode)
- Time schedule override: closing of this contact cancels the time schedule effects
- Out of service: this signal indicates that the chiller is completely out of service
- Chiller capacity: this analogue output (0-10 V) gives an immediate indication of the chiller capacity
- Alert indication: this volt-free contact indicates the necessity to carry out a maintenance operation or the presence of a minor fault.

Carrier products and green building certification

- Introduction
  Energy usage and costs combined with increasing concerns to reduce CO_2 emissions are among the most important environmental challenges in today's world. New and existing buildings are one area where energy efficiency and the conservation of natural resources is a high priority.
- Green building design
  Design teams increasingly focus on designing "green buildings" to address today's energy efficiency and environ-mental sustainability needs. A green building is a building that is environmentally sustainable and has been designed, constructed and is operated to minimise the total impact of the environment.

  The underlying principles of this approach: the resulting building will be economical to operate, offer increased comfort and create a healthier environment for the people who live and work there, increasing productivity.

  The main strategies* adopted to achieve a green building design include:
  - Sustainable Sites (SS)
  - Water Efficiency (WE)
  - Energy & Atmosphere (EA)
  - Materials & Resources (MR)
  - Indoor Environmental Quality (IEQ)
  - Innovation in Design (ID)
- Green building certification
  A number of green building certification programs exist in the market and offer third-party assessment of green building measures for a wide variety of building types. Some examples of existing programs include:
  - LEED (Leadership in Energy & Environmental Design)
  - BREEAM
  - ESTIDAMA PEARL
  - NABERS (National Australian Built Environment Rating System)
- HVAC products and systems
  Carrier HVAC products are built to high energy efficiency and indoor air quality standards. They assist building designers and owners by offering high-performance heating, ventilation, and air conditioning (HVAC) systems and products with reduced energy consumption and enhanced indoor air quality for the occupants, contributing to optimised green building performance.

  Each certification program may address and prioritise different green building design strategies according to local and regional needs and legislation. The following example looks at how Carrier's new 30XWHV range helps customers involved in LEED building certification.

* Source USGBC: LEED

Example: 30XWHV and LEED® certification

The LEED® (Leadership in Energy and Environmental Design) green building certification programme is a pre-eminent programme to rate the design, construction and operation of green buildings with points assigned in seven credit categories:

- Sustainable Sites (SS)
- Water Efficiency (WE)
- Energy & Atmosphere (EA)
- Materials & Resources (MR)
- Indoor Environmental Quality (IEQ)
- Innovation in Design (ID)
- Regional Priority (RP)

There are a number of different LEED® products. Whilst the strategies and categories assessed remain the same, the point distribution varies to address different building types and application needs, for example according to New Construction, Schools, Core & Shell, Retail and Healthcare. All programmes now use the same point scale.

110 possible LEED points

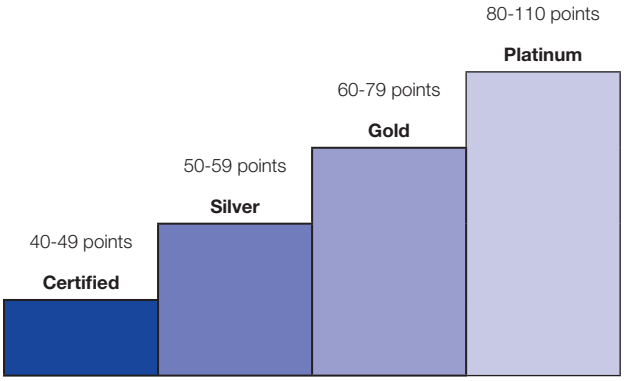

The majority of credits in LEED® rating systems are performance-based and achieving them is dependent on the impacts to the overall building. The contribution any product or system may make to the points achieved depends on how it impacts the entire building and its operations.

Whilst the LEED® green building certification programme does not certify products or services, the selection of products or service programmes is critical to obtaining LEED® certification for a registered project because the right products or service programmes can help meet the goals of green construction and ongoing operation and maintenance.

The choice of heating, ventilating and air conditioning (HVAC) products in particular can have a significant impact on LEED® certification, as the HVAC system directly impacts two categories that together influence 40% of the available points.

Overview of LEED for new construction and major renovations

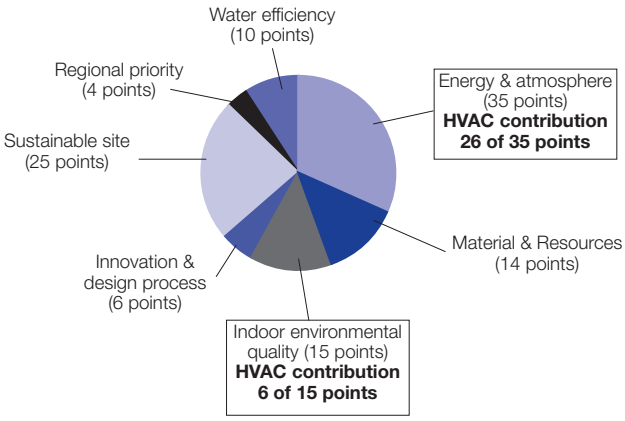

The new 30XWHV units from Carrier can assist building owners to earn LEED® points in the Energy & Atmosphere (EA) credit category and help address the following prerequisites and credit requirements:

- **EA prerequisite 3: Fundamental Refrigerant Management**
  The 30XWHV does not use chlorofluorocarbon (CFC) refrigerants satisfying the prerequisite statement
- **EA credit 1: Optimise energy performance (1 to 19 points)**
  One component for this credit requires the energy cost reduction of the proposed building compared to ASHRAE 90.1-2007 minimum tables and beyond the performance level required to meet EA prerequisite 2.

  The 30XWHV is designed for efficient part-load performance and therefore satisfies this LEED® credit. In addition, the Carrier HAP (Hourly Analysis Program) can be used in the energy analysis component of this credit. The HAP program can run analysis programs that comply with the modeling requirements for this credit and produce reports that are easily transferable to LEED® templates.
- **EA credit 4: Enhanced refrigerant management (2 points)**
  With this credit, LEED® awards systems that minimise the Ozone Depletion Potential (ODP) and Global Warming Potential (GWP) of the system.

  The 30XWHV uses a reduced R134a charge and therefore contributes toward satisfying this credit under LEED®.

Note: This section describes the prerequisites and credit requirements in LEED® for New Construction and is directly related to the 30XWHV. Other prerequisites and credit requirements are not directly and purely related to the air-conditioning unit itself, but more to the control of the complete HVAC system. i-Vu®, Carrier's open control system, has features that can be valuable for:
- EA prerequisite 1: Fundamental commissioning of energy management systems
- EA credit 3: Enhanced commissioning (2 points)
- EA credit 5: Measurements and verification (3 points)

Note: Products are not reviewed or certified under LEED®. LEED® credit requirements cover the performance of materials in aggregate, not the performance of individual products or brands. For more information on LEED®, visit: www.usgbc.org.

Controls

Touch Pilot control

Touch Pilot operator interface

- New innovative smart control for variable-drive screw-compressor chillers. With the ultimate touch screen interface the Touch Pilot includes:
  - An intuitive and user-friendly interface. Concise and clear information is available in local languages.
  - Complete menu, customised for different users (end user, service personnel or Carrier engineers).
  - Safe operation and unit setting: password protection ensures that unauthorised people cannot modify any advanced parameters.
  - General access without password to the most important operating parameters.
  - Touch Pilot combines intelligence with operating simplicity. For optimum energy efficiency the control constantly monitors all machine parameters and precisely manages the operation of compressors, electronic expansion devices and of the evaporator and condenser water pumps.
- Energy management
  - Internal time schedule clock: controls chiller on/off times and operation at a second set-point
  - Set-point reset based on the return water temperature
  - The DCT (Data Collection Tool) records the alarms history to simplify and facilitate service operations.

Remote management (standard)

Units with Touch Pilot control can be easily accessed from the internet, using a PC with an Ethernet connection. This makes remote control quick and easy and offers significant advantages for service operations.

The 30XWHV is equipped with an RS485 serial port that offers multiple remote control, monitoring and diagnostic possibilities. Carrier offers a vast choice of control products, specially designed to control, manage and supervise the operation of an air conditioning system. Please consult your Carrier representative for more information.

The 30XWHV also communicates with other building management systems via optional communication gateways.

A connection terminal allows remote control of the 30XWHV by wired cable:

- A digital input allows verification of condenser water flow (the flow switch must be supplied by the installer). This function is required to control operation of the condenser pumps.
- Start/stop: opening of this contact will shut down the unit
- Dual set-point: closing of this contact activates a second set-point (example: unoccupied mode)
- Demand limit: closing of this contact limits the maximum chiller capacity to a predefined value
- Operation indication: this volt-free contact indicates that the chiller is operating (cooling load) or that it is ready to operate (no cooling load)
- Alarm indication: this volt-free contact indicates the presence of a major fault that has led to the shut-down of one or several refrigerant circuits.

Operating limits

30XWHV	Minimum	Maximum
Evaporator		
Entering temperature at start-up	-	35.0°C
Leaving temperature during operation	3.3°C*	20.0°C
Entering/leaving temperature difference at full load	2.8 K	11.1 K
Condenser		
Entering temperature at start-up	13.0°C**	-
Leaving temperature during operation	19.0°C**	50.0°C
Entering/leaving temperature difference at full load	2.8 K	11.1 K

* Options 5/6 not available

** For lower condenser temperatures, a water flow control valve must be installed at the condenser (two-way or three-way). Please refer to option 152 to ensure the correct condensing temperature.

Notes:

Ambient temperatures: During storage and transport of the units (including by container) the minimum and maximum permissible temperatures are -20°C and 72°C (and 65°C for option 200).

For more precise details refer to the unit selection program.

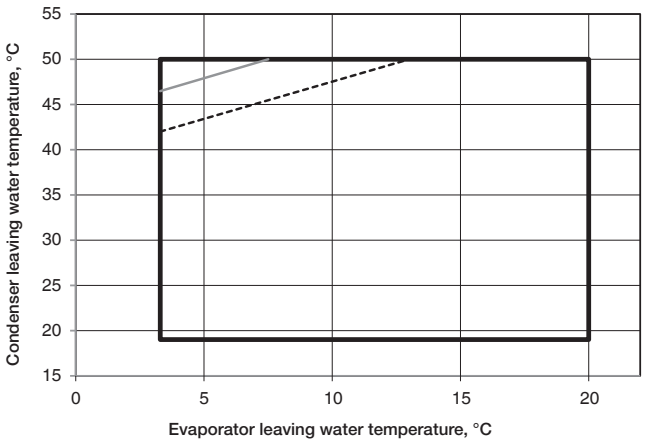

From approx. 50% to full load

Part load limit approx. 50%

Minimum load limit

For more precise details please refer to the unit selection program.

Pressure drop curves

Units with two evaporator passes (standard)

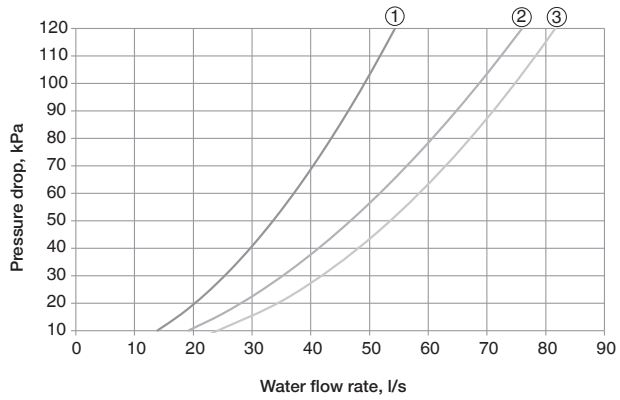

1 Sizes 580, 630
2 Sizes 810, 880
3 Sizes 1150, 1280, 1470, 1570, 1710

Units with one evaporator pass (option 100C)

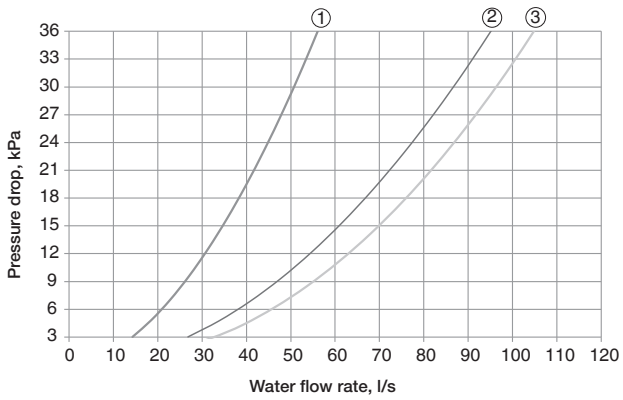

1 Sizes 580, 630
2 Sizes 810, 880
3 Sizes 1150, 1280, 1470, 1570, 1710

Units with two condenser passes (standard)

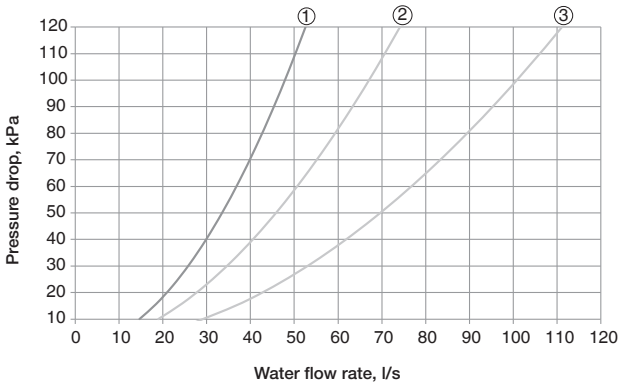

1 Sizes 580, 630
2 Sizes 810, 880
3 Sizes 1150, 1280, 1470, 1570, 1710

Units with one condenser pass (option 102C)

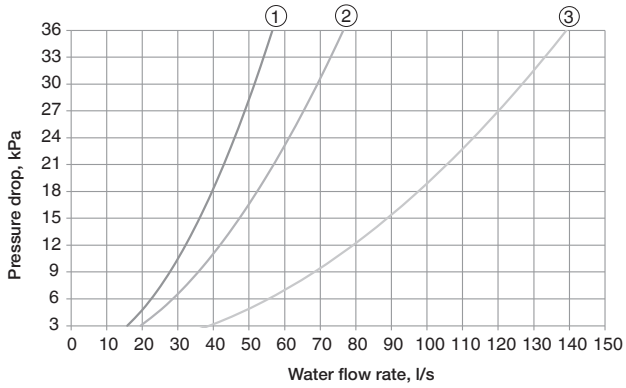

1 Sizes 580, 630
2 Sizes 810, 880
3 Sizes 1150, 1280, 1470, 1570, 1710

Dimensions/clearances

30XWHV 580-880

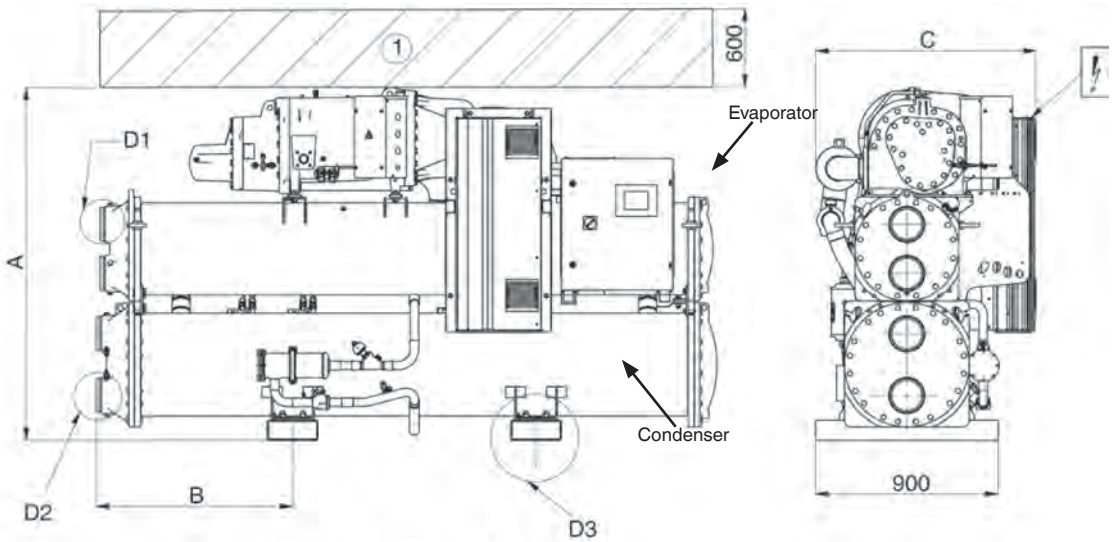

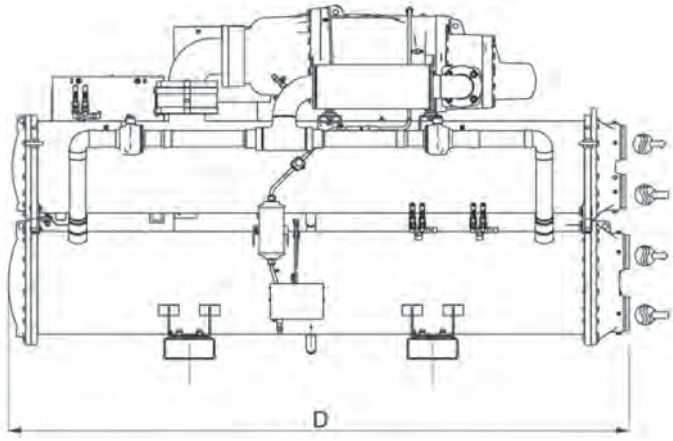

	Dimensions in mm						
	A	B	C	D	E	F	G
30XWHV							
580	1743	968	1087	3059	168.3	168.3	2900
630	1743	968	1087	3059	168.3	168.3	2900
810	1950	1083	1237	3290	219.1	219.1	3100
880	1950	1083	1237	3290	219.1	219.1	3100

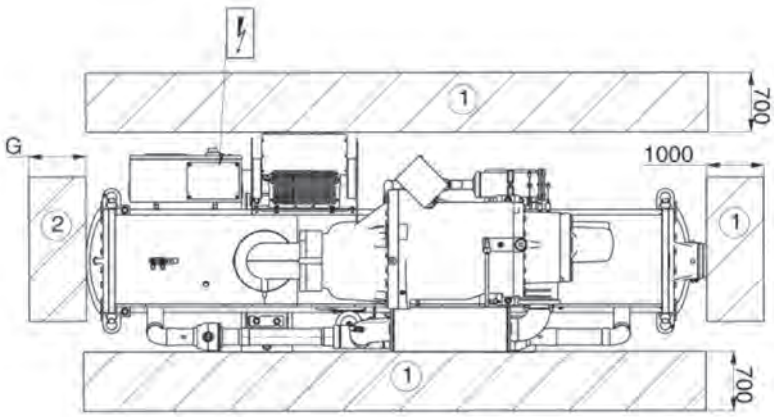

Legend:

All dimensions are in mm.

1 Required clearance for maintenance

2 Recommended clearance for tube removal

Water inlet

Water outlet

Power supply connection

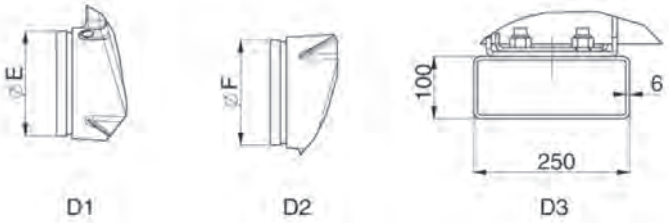

Note: Drawings are not contractually binding. Before designing an installation, consult the certified dimensional drawings, available on request.

30XWHV 1150-1710

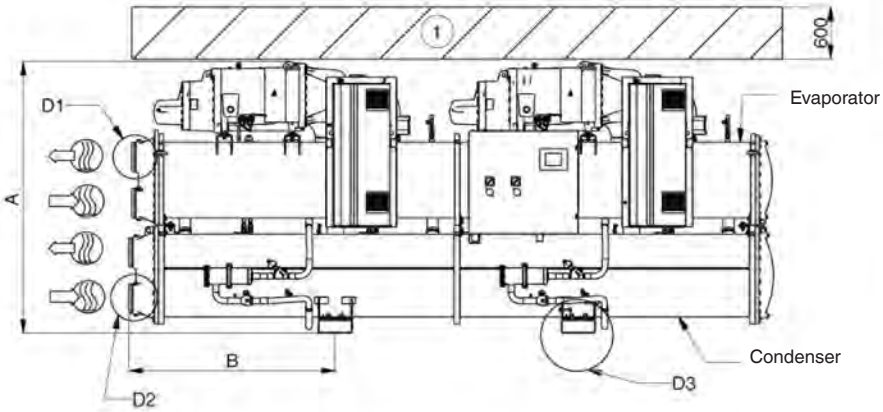

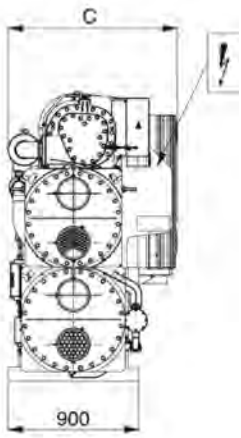

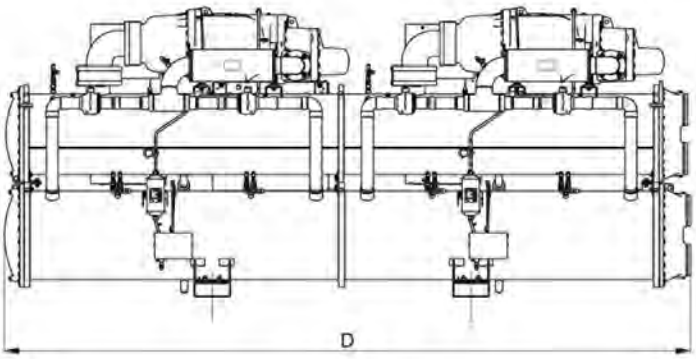

	Dimensions in mm					
	A	B	C	D	E	F
30XWHV						
1150	1997	1514	1164	4730	219.1	219.1
1280	1997	1514	1164	4730	219.1	219.1
1470	2051	1514	1255	4730	219.1	219.1
1570	2051	1514	1255	4730	219.1	219.1
1710	2051	1514	1255	4730	219.1	219.1

Legend:

All dimensions are in mm.

(1) Required clearance for maintenance

(2) Recommended clearance for tube removal

Water inlet

Water outlet

Power supply connection

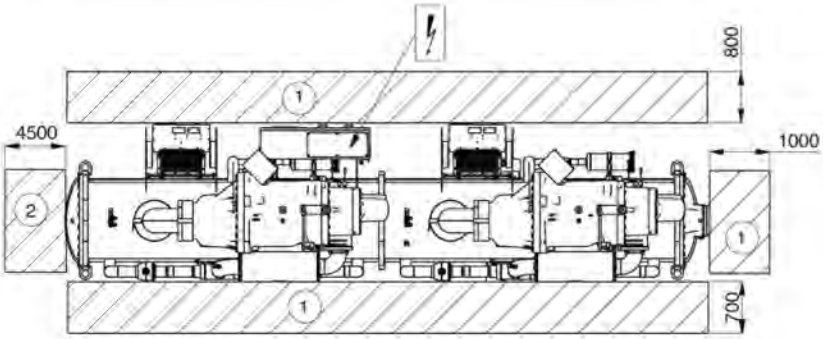

D1

D2

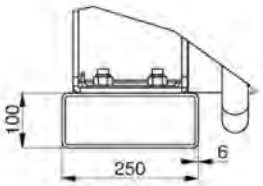

D3

Note: Drawings are not contractually binding. Before designing an installation, consult the certified dimensional drawings, available on request.

30XWHP-ZE

NEW

Nominal heating capacity 320 - 1285 kW

30XWHV-ZE

Nominal heating capacity 520 - 1570 kW

HEATING

AQUAFORCE PUREtec

Carrier at the forefront of innovative technology

Carrier has been working over the past years on selecting the right refrigerant for the future and has now taken the lead in introducing the next generation of refrigerants on screw units : PUREtec™. With PUREtec, Carrier offers a range of new customized solutions using a refrigerant with zero impact on the ozone layer and nearly zero global warming potential: HFO R-1234ze.

All the reliability, efficiency, adaptability of the AquaForce range combined with PUREtec refrigerant: HFO R-1234ze.

HFO R-1234ze

70°C hot water production (30XWHP ZE)

Long-term refrigerant choice

Nearly zero global warming potential

Zero impact on the ozone layer

Support HFC phase-down plan in Europe

PUREtec

Physical data

30XWHP ZE			30XWHP ZE0301	30XWHP ZE0401	30XWHP ZE0451	30XWHP ZE0551	30XWHP ZE0601
Heating							
Performance Information							
Heating Capacity*		kW	321	449	510	648	695
Heating Efficiency	COP	kW/kW	6,25	6,72	6,64	6,83	6,63
Maximum hot water temperature		°C	70	70	70	70	70
Number of Refrigerant Circuit		--	1	1	1	1	1
Operating/Shipping Weight		kg	2072/1953	2981/2763	3020/2802	3912/3593	3947/3628
Unit Dimensions	LxWxH	mm	2724/927 /1617	3059/936/ 1743	3059/936/ 1743	3290/1065/ 1950	3290/1070/ 1950
Electrical Information							
Unit Voltage:		V-Ph-Hz	400(+/-10%) -3-50	400(+/-10%) -3-50	400(+/-10%) -3-50	400(+/-10%) -3-50	400(+/-10%) -3-50
Standby Power:		kW	0,05	0,05	0,05	0,05	0,05
Power Factor:		--	0,88	0,90	0,90	0,90	0,90
Amps (Un)							
Circuit 1							
Maximum Current		A	130	176	196	239	263
Start Up Current		A	303	414	414	587	587
Current at Eurovent Conditions		A	87	109	123	146	162
Circuit 2							
Maximum Current		A	--	--	--	--	--
Start Up Current		A	--	--	--	--	--
Current at Eurovent Conditions		A	--	--	--	--	--

30XWHP ZE			30XWHP ZE0651	30XWHP ZE0801	30XWHP ZE0901	30XWHP ZE1001	30XWHP ZE1101
Heating							
Performance Information							
Heating Capacity*		kW	761	916	1019	1165	1285
Heating Efficiency	COP	kW/kW	6,66	6,73	6,79	6,81	6,59
Maximum hot water temperature		°C	70	70	70	70	70
Number of Refrigerant Circuit		--	1	2	2	2	2
Operating/Shipping Weight		kg	3965/3646	6872/6218	6950/6296	7542/6682	7752/6892
Unit Dimensions	LxWxH	mm	3290/1070/ 1950	4795/1039/ 1997	4795/1039/ 1997	4730/1162/ 2051	4730/1162/ 2051
Electrical Information							
Unit Voltage:		V-Ph-Hz	400(+/-10%) -3-50	400(+/-10%) -3-50	400(+/-10%) -3-50	400(+/-10%) -3-50	400(+/-10%) -3-50
Standby Power:		kW	0,05	0,05	0,05	0,05	0,05
Power Factor:		--	0,82	0,89	0,90	0,90	0,90
Amps (Un)							
Circuit 1							
Maximum Current		A	284	176	196	239	239
Start Up Current		A	587	414	414	587	587
Current at Eurovent Conditions		A	176	109	123	146	146
Circuit 2							
Maximum Current		A	--	176	196	196	239
Start Up Current		A	--	414	414	414	587
Current at Eurovent Conditions		A	--	109	123	123	146

* Heating mode conditions: Condenser water heat exchanger, entering/leaving water temperature 30°C/35°C, fouling factor 0 m² K/W. Evaporator water heat exchanger, entering/leaving water temperature 10°C/7°C, fouling factor 0 m² K/W.

All performances are compliant with EN14511-3 : 2013. Sound power level according to ISO9614-1.
Unit is outside of the scope of AHRI Water-Cooled Water Chilling Packages Using Vapor Compression Cycle Certification Program, but is rated in accordance with AHRI Standard 550/590 (I-P) and AHRI Standard 551/591 (SI).
Preliminary product data for information only. Final product data will be submitted by Carrier to Eurovent company during 2016.

PRELIMINARY DATA
PRELIMINARY DATA

Physical data

30XWHV ZE			30XWHV ZE0451	30XWHV ZE0501	30XWHV ZE0601	30XWHV ZE0651	30XWHV ZE0851
Heating							
Performance Information							
Heating Capacity*		kW	522	582	726	771	1013
Heating Efficiency	COP	kW/kW	6,44	6,31	6,25	6,08	6,45
Maximum hot water temperature		°C	55	55	55	55	55
Number of Refrigerant Circuit		--	1	1	1	1	2
Operating/Shipping Weight		kg	3152/2934	3190/2972	4157/3838	4161/3842	7417/6763
Unit Dimensions	LxWxH	mm	3059/1087/ 1743	3059/1087/ 1743	3290/1137/ 1948	3290/1137/ 1948	4730/1165/ 1997
Electrical Information							
Unit Voltage:		V-Ph-Hz	400(+/-10%) -3-50	400(+/-10%) -3-50	400(+/-10%) -3-50	400(+/-10%) -3-50	400(+/-10%) -3-50
Standby Power:		kW	0,05	0,05	0,05	0,05	0,05
Power Factor:		--	0,92	0,92	0,92	0,92	0,92
Amps (Un)							
Circuit 1							
Maximum Current		A	185	234	269	297	185
Start Up Current		A	<RLA	<RLA	<RLA	<RLA	<RLA
Current at Eurovent Conditions		A	132	152	182	201	132
Circuit 2							
Maximum Current		A	--	--	--	--	185
Start Up Current		A	--	--	--	--	<RLA
Current at Eurovent Conditions		A	--	--	--	--	132

30XWHV ZE			30XWHV ZE1001	30XWHV ZE1101	30XWHV ZE1201	30XWHV ZE1301
Heating						
Performance Information						
Heating Capacity*		kW	1158	1301	1443	1571
Heating Efficiency	COP	kW/kW	6,50	6,39	6,05	5,95
Maximum hot water temperature		°C	55	55	55	55
Number of Refrigerant Circuit		--	2	2	2	2
Operating/Shipping Weight		kg	7493/6839	7671/7017	7872/7218	7910/7256
Unit Dimensions	LxWxH	mm	4730/1165/1997	4730/1255/2051	4730/1255/2051	4730/1255/2051
Electrical Information						
Unit Voltage:		V-Ph-Hz	400(+/-10%) -3-50	400(+/-10%) -3-50	400(+/-10%) -3-50	400(+/-10%) -3-50
Standby Power:		kW	0,05	0,05	0,05	0,05
Power Factor:		--	0,92	0,92	0,92	0,92
Amps (Un)						
Circuit 1						
Maximum Current		A	234	269	269	297
Start Up Current		A	<RLA	<RLA	<RLA	<RLA
Current at Eurovent Conditions		A	152	182	182	201
Circuit 2						
Maximum Current		A	234	234	269	297
Start Up Current		A	<RLA	<RLA	<RLA	<RLA
Current at Eurovent Conditions		A	152	152	182	201

* Heating mode conditions: Condenser water heat exchanger, entering/leaving water temperature 30°C/35°C, fouling factor 0 m² K/W. Evaporator water heat exchanger, entering/leaving water temperature 10°C/7°C, fouling factor 0 m² K/W.

All performances are compliant with EN14511-3 : 2013. Sound power level according to ISO9614-1.
Unit is outside of the scope of AHRI Water-Cooled Water Chilling Packages Using Vapor Compression Cycle Certification Program, but is rated in accordance with AHRI Standard 550/590 (I-P) and AHRI Standard 551/591 (SI).
Preliminary product data for information only. Final product data will be submitted by Carrier to Eurovent company during 2016.

PRELIMINARY DATA
PRELIMINARY DATA

61XWH-ZE

NEW 85°C

Nominal heating capacity 400 - 2000 kW

AQUAFORCE PUREtec

HEATING

Carrier at the forefront of innovative technology

Carrier has been working over the past years on selecting the right refrigerant for the future and has now taken the lead in introducing the next generation of refrigerants on screw units : PUREtec™. With PUREtec, Carrier offers a range of new customized solutions using a refrigerant with zero impact on the ozone layer and nearly zero global warming potential: HFO R-1234ze.

All the reliability, efficiency, adaptability of the AquaForce range combined with PUREtec refrigerant: HFO R-1234ze.

HFO R-1234ze

85°C hot water production

Long-term refrigerant choice

Nearly zero global warming potential

Zero impact on the ozone layer

Support HFC phase-down plan in Europe

PUREtec

Physical data

61XWH-ZE		61XWH-ZE0301	61XWH-ZE0501	61XWH-ZE0751	61XWH-ZE1001	61XWH-ZE1501
Heating						
Heating Capacity (10°C / 75°C)	kW	222	362	532	723	1064
Heating Capacity (30°C / 75°C)	kW	410	655	974	1310	1948
Heating Capacity (20°C / 85°C)	kW	271	439	645	879	1290
Heating Capacity (35°C / 85°C)	kW	419	671	996	1342	1992
Maximum hot water temperature	°C	85	85	85	85	85
Nb of Refrigerant Circuit		1	1	1	2	2
Operating Weight:	Kg	2230	3250	4500	7500	8800
Length	mm	2750	3100	3300	4800	4850
Width	mm	950	950	1150	1050	1350
Height	mm	1600	1750	2000	2000	2200

PRELIMINARY DATA

All performances are not compliant with EN14511-3 : 2013.
Custom units which are not certified in accordance with AHRI Water-Cooled Water-Chilling and Heat Pump Water-Heating Packages Using Vapor Compression Cycle Certification Program.
Preliminary product data for information only. Final product data will be submitted by Carrier to Eurovent company during 2016.

Operating range

61XWH-ZE	Minimum	Maximum
Evaporator		
Entering temperature at start-up	-	50°C
Leaving temperature during operation	0 to 15°C	35°C
Entering/leaving temperature difference at full load	2 K	Up to 20K*
Condenser		
Entering temperature at start-up	20°C	-
Leaving temperature during operation	45°C	70 to 85°C
Entering/leaving temperature difference at full load	2 K	Up to 20K*

* Water box configurations 1, 2 or 3 passes

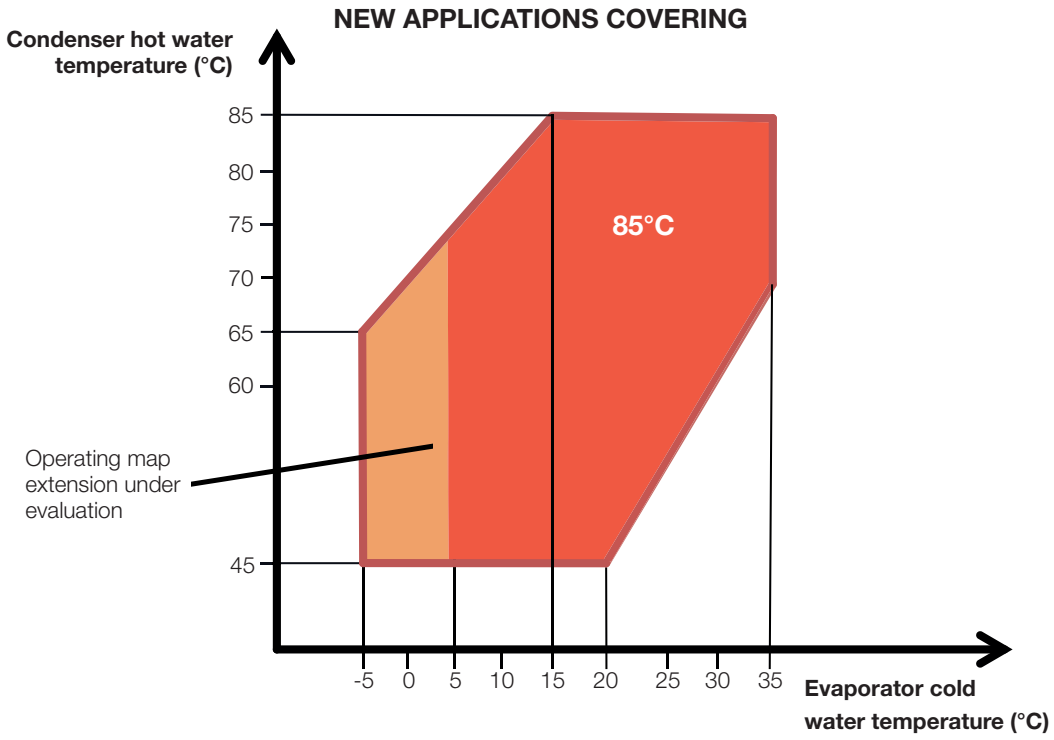

Carrier

United Technologies

DESIGNING INNOVATIVE SOLUTIONS

AIR CONDITIONING & HEATING SOLUTIONS

SIMPLICITY OR FULL MODULARITY ?

IDROFAN, BECAUSE YOU SHOULD NOT HAVE TO CHOOSE.

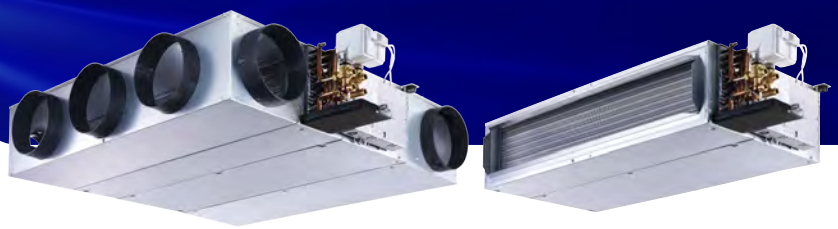

- Experience
- Versatility
- Serviceability
- Modular design
- Smart technologies
- Low noise emission

www.carrier.com

Since Willis Carrier developed the world's first modern air conditioning system in1902, Carrier's engineering teams have been designing advanced solutions for your business. **And because you should not have to choose between simplicity or full modularity,** the IDROFAN wide range can perfectly meet all your building requirements.

With over millions of installations, the Idrofran range units ensure plug & play installations. The 42NL & 42NH units are designed to meet silence standards and meet customers demands in terms of heating and cooling capacity.

The units are equiped with smart controllers including the new Water Terminal Controller, managing water valve and fan speed simultaneously for minimum energy consumption and maximum comfort.

Combining simplicity of installation and a highly modular design, the 42NL & 42NH units are the right choice for all applications.

IDROFAN®

Air treatment 577

Type				Range	Cooling capacity, kW	Heating capacity, kW	Air flow, l/s	Page
Hybrid Terminal			NEW	36XB	0.27 - 2	0.25 - 8	8 - 42	578
Air heaters			NEW	42AM	-	-	-	582
Chilled-water terminal units								
Cassette	**Cabinet**	**Ducted**						
X				42GW	1.6 - 8.7	2.2 - 14.5	100 - 400	596
X			NEW	42KY	1.7 - 2.8	2.4 - 2.9	250 - 770	610
	X			42N	1.5 - 8.7	1.3 - 11.6	35 - 422	618
		X	NEW	42NL/NH	0.6 - 12	0.8 - 17	59 - 477	638
		X		42BJ	0.5 - 4.9	0.5 - 5.8	16 - 200	670
		X		42GM	2.2	1.7	94	682
		X		42GR	3.1	2.9 - 3.5	103 - 109	686
Air systems and terminal units								
Linear air diffusers: Moduboot				**35BD/SR**	-	-	28 - 180	696
System-powered linear VAV air diffusors: Moduline				**37AG**	-	-	19 - 173	700
				37AH	-	-	47 - 236	700
				37AS	-	-	19 - 78	700
Air handling units								
			NEW	**39CQ**	-	-	270 - 1660	704
			NEW	**39HX**	-	-	80 - 5000	710
			NEW	**39CP**	-	-	270 - 8300	722
Compact heat recovery units				**39SQ**	-	-	401 - 7300	724
Standard units				**39SQC/R/P**	-	-	200 - 8200	728
Standard energy recovery units				**39HQ**	-	-	1500 - 35000	734
			NEW	**39CZ**	-	-	270 - 18330	738
Split systems								
Outdoor units, axial fan		R-410A	NEW	38RBS	40 - 160	-	-	742
Close control units								
			NEW	**50CJ**	5 - 55	4.5 - 41	-	750
			NEW	**50CO**	40 - 130	36 - 73	-	760
Packaged								
Outdoor units, axial fan		R-410A	NEW	**50HB/HF**	12 - 37	14 - 41	-	766
			NEW	**50NZ/NF**	18 - 70	18 - 73	-	970
Packaged								
Split systems		R-410A	NEW	38-40 HB/HF	19 - 37	22 - 42	-	788
			NEW	38-40 NZ/NF	19 - 80	22 - 88	-	798
Rooftop units								
		R-410A	NEW	**50EN/EH**	20 - 85	20 -90	-	812
			NEW	**50EN/EH**	92 - 281	99 - 293	-	826
			NEW	**48EN/EH**	59 - 136	63 - 144	-	838

36XB

NEW

IDROFAN

The 36XB Hybrid Terminal combines the advantages of both chilled beams and fan coils: energy efficiency, high levels of comfort, extremely low noise and high indoor air quality.

The low height profile (<200mm) of the unit facilitates installation in low height ceilings and allows increased room heights for refurbishment projects.

Unit aesthetics can be tailored to suit site specific ceiling layouts, colour schemes and return air grill design.

Unlike conventional chilled beams, the Carrier 36XB Hybrid terminal is fitted with a coil condensate drain pan as standard. Even if the cooling coil is supplied with chilled water at 6°C, there is no danger of condensate falling into the occupied space.

Physical data

Cooling capacities

Room Temperature: Dry bulb = 27°C and humidity = 47% - Fresh air temperature 14°C

		Chilled water temperature 7-12°C				Chilled water temperature 14-17°C							
Air flow m³/h	LEC Fan speed V	Total cooling capacity W	Sensible cooling capacity W	Coil Water flow l/h	Water pressure drop KPa	Total cooling capacity W	Sensible cooling capacity W	Coil Water flow l/h	Water pressure drop KPa	Fan consump-tion W	Air pres-sure drop Pa	Noise Pres-sure level dB(A)*	Noise level NR*
30	0	269	249	43	1	256	252	36	1	0	9	< 20	< 20
	2	537	416	68	2	330	325	58	1	3.7	10	< 20	< 20
	5	891	672	130	4	508	503	108	3	5.7	11	32	27
	8	1297	977	202	10	719	714	169	7	10.6	14	44	39
60	0	753	609	83	2	504	499	68	1	0	28	< 20	< 20
	2	830	664	97	2	542	537	79	2	3.7	29	< 20	< 20
	5	1145	895	151	6	703	697	126	4	5.7	30	32	27
	8	1465	1136	205	10	870	865	173	7	10.6	32	44	39
90	0	1107	902	122	4	748	743	101	2	0	57	< 20	< 20
	3	1128	917	126	4	759	754	104	3	3.7	57	< 20	< 20
	5	1414	1129	173	7	906	901	144	5	5.7	59	32	27
	8	1698	1346	223	12	1055	1051	187	9	10.6	61	44	39
120	0	1443	1184	158	6	985	989	130	4	0	98	35	30
	2	1508	1233	169	7	1018	1013	140	5	3.7	98	35	30
	5	1730	1401	205	10	1135	1130	173	7	5.7	99	35	30
	8	1987	1600	252	15	1271	1268	212	11	10.6	100	45	40
150	0	1767	1460	191	9	1217	1212	158	6	0	149	41	36
	2	1797	1484	194	9	1233	1228	162	7	3.7	149	41	36
	5	1980	1624	227	12	1329	1325	191	9	5.7	150	42	37
	8	2194	1791	263	71	1444	1441	223	12	10.6	151	46	41

Preliminary Data :
* Sound Level guidance with acoustic atenuation -9 dB(A)

Heating capacities

Room Temperature: 20°C - Fresh air temperature 20°C

		Hot water temperature 70-50°C			Hot water temperature 45-40°C						
Air flow m³/h	LEC Fan speed V	Total heating capacity W	Coil Water flow l/h	Water pressure drop KPa	Total heating capacity W	Coil Water flow l/h	Water pressure drop KPa	Fan consump-tion W	Air pres-sure drop Pa	Noise Pres-sure level dB(A)*	Noise level NR*
30	0	444	18	1	241	43	1	0	9	< 20	< 20
	2	718	32	1	390	68	1	3.7	10	< 20	< 20
	5	1365	61	1	749	130	4	5.7	11	32	27
	8	2127	94	2	1179	205	9	10.6	14	44	39
60	0	873	40	1	475	83	2	0	28	< 20	< 20
	2	1009	43	1	551	97	1	3.7	29	< 20	< 20
	5	1593	68	1	877	151	5	5.7	30	32	27
	8	2195	97	2	1219	212	9	10.6	32	44	39
90	0	1275	58	1	699	122	3	0	57	< 20	< 20
	3	1316	61	1	722	126	4	3.7	57	< 20	< 20
	5	1849	83	2	1021	176	7	5.7	59	32	27
	8	2383	104	2	1327	230	11	10.6	61	44	39
120	0	1654	72	1	912	158	6	0	98	35	30
	2	1777	79	1	981	169	6	3.7	98	35	30
	5	2195	97	2	1219	212	9	5.7	99	35	30
	8	2684	119	3	1500	259	13	10.6	100	45	40
150	0	2013	90	2	1115	194	8	0	149	41	36
	2	2070	94	2	1148	198	8	3.7	149	41	36
	5	2416	104	3	1346	234	11	5.7	150	42	37
	8	2829	126	3	1583	274	15	10.6	151	46	41

Preliminary Data :
* Sound Level guidance with acoustic atenuation -9 dB(A)

Options

Communicating controller

- BMS compatible controller
- For 2 pipe, 2 pipe + electric heater and 4 pipe applications
- Aquasmart Evolution System compatible
- Variable fan speed control, demand based ventilation (CO_2 monitoring) and coil condensation control.
- Integrated window blind and lighting control.
- Motorised blinds & lighting control

Aquasmart System Manager

Features and advantages

Features

- The 36XB Hybrid Terminal combines the advantages of both chilled beams and fan coils: energy efficiency, high levels of comfort, extremely low noise and high indoor air quality.
- The low height profile (<200mm) of the unit facilitates installation in low height ceilings and allows increased room heights for refurbishment projects.
- Unit aesthetics can be tailored to suit site specific ceiling layouts, colour schemes and return air grill design.
- Unlike conventional chilled beams, the Carrier 36XB Hybrid terminal is fitted with a coil condensate drain pan as standard. Even if the cooling coil is supplied with chilled water at 6°C, there is no danger of condensate falling into the occupied space.
- A unit mounted changeover valve allows the coil to be connected to a 4 pipe water system so providing either cooling or heating, as required.
- If required, the Carrier 36XB Hybrid Terminal can be fitted with a room air return filter G3 to F5. This filter is accessible for cleaning / replacement without disturbing the unit / ceiling.

Principals of Operation

- Primary ventilation air is supplied to each unit inducing secondary (room) air flow over the cooling / heating coil without the need to run the unit fan.
- During periods of peak demand, the unit fan may be energised to increase secondary air flow hence and boosting the unit cooling / heating output.
- Unique Carrier supply air diffuser design ensures excellent air distribution, no 'dumping' and minimal room temperature gradients in both cooling and heating.
- The primary ventilation air volume can be controlled based on room CO_2 levels to maximise comfort and minimise system energy consumption
- The CO_2 sensor (optional) mounted in the secondary (room) air flow can modulate the supply of primary ventilation air to the unit from 2.8 to 33 l/s, depending on room occupancy.
- Using the unit fan only when there is a peak demand in the occupied space offers energy savings for up to 80% of the annual building occupancy.
- Based on a typical office profile & loads this economy can result in an average annual unit specific fan power (A-SFP) <0.05 W/l/s
- Assured air quality; in addition to varying the quantity of hygienic air, the hybrid terminal 36XB may receive a filter on the return air available from the grid.
- Energy efficiency, easy installation, comfort, low noise and high indoor air quality.

Dimensions/clearances

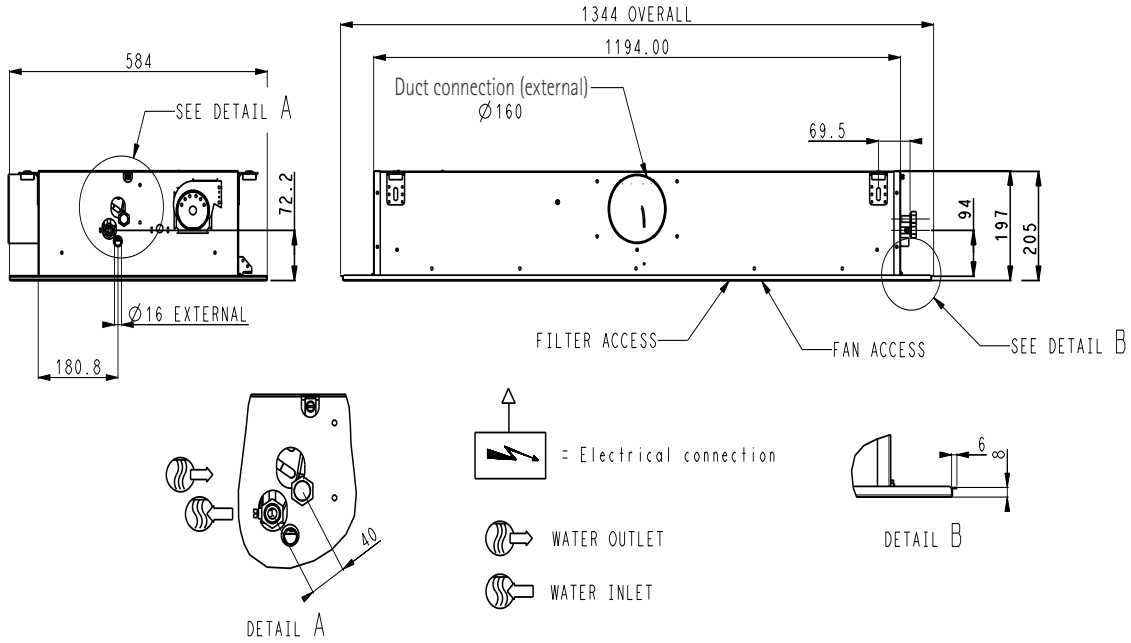

42AM

NEW

The best solution for heating large spaces

Ensures buildings warm up ultra-fast

Excellent diffusion via patented JET+ double deflection technology

In wall-mounted or ceiling-mounted versions, the air heater is the simple, affordable heating/cooling solution for all your applications: for your premises in the tertiary sector (sales area, gym, multi-purpose rooms etc.) or in industry (workshop, garage, storage unit, logistics platform, etc.).

The 42AM range meets APSAD and NFPA recommendations on unit peripheral air speeds.

All are less than 5 m/s at 0.5 m from the diffuser and thus do not interfere with sprinkler systems.

The air heater may have associated destratifiers (42AM A), to promote mixing of the building air (anti-stratification solution).

Range

Heating/cooling medium	Water
Standard drive	THREE-PHASE 2 speeds – SINGLE-PHASE 1 variable speed IP44/54 depending on the model
Coil (tubing/row)	Copper/Alu
Casing	Precoated off-white (RAL 7035) galvanised steel Condensate pan + built-in nautical coupling for cooling

Single-phase 42AM performance

HEATING application - Single-phase motor

Model	No. rows	Air supply speed SINGLE PHASE	Flow rate m³/h	Air speed m/s	Throw (metres) Wall-mounted	Throw (metres) Suspended	Sound pressure dB(A)
35	1	Direct	2 600	3.92	22	6	48
		R3*	2 360	3.56	18	4	46
	2	Direct	2 400	3.62	20	5	49
		R3*	2 030	3.06	15	2,5	47
	3	Direct	2 075	3.13	15	2,5	50
		R3*	1 780	2.68	14	2	48
40	1	Direct	4 200	4.57	26	8,5	54
		R3*	3 914	4.26	24	7,5	52
	2	Direct	3 800	4.13	23	7	55
		R3*	3 550	3.86	19	4,5	53
	3	Direct	3 450	3.75	23	7	56
		R3*	3 220	3.50	20	5,5	54
45	1	Direct	5 200	4.20	27	8,5	56
		R3*	4 100	3.31	24	6	49
	2	Direct	4 700	3.80	21	4,5	58
		R3*	3 700	2.99	18	4	51
	3	Direct	4 550	3.68	18	3,5	59
		R3*	3 650	2.95	17	3	52
50	1	Direct	7 100	4.22	28	9	56
		R3*	5 700	3.39	26	7	50
	2	Direct	6 600	3.92	26	7	57
		R3*	5 380	3.20	24	6	51
	3	Direct	6 200	3.69	24	6,5	58
		R3*	5 055	3.01	23	5,5	52
63	1	Direct	10 450	4.19	28	10,5	54
		R3*	8 900	3.57	22	8	47
	2	Direct	9 610	3.86	24	8,5	55
		R3*	7 630	3.06	20	6	46
	3	Direct	8 280	3.32	21	6,5	56
		R3*	6 270	2.52	19	5	44

HEATING - COOLING application - Single-phase motor

Model	No. rows	Air supply speed	Air flow rate m³/h	Air speed m/s	Throw (metres) Wall-mounted	Sound pressure dB(A)
35	3	Direct	1640	2.47	23	30
40			2160	2.35	26	48
45			3025	2.44	24	45
50			4060	2.41	23	54
63	-	-	-	-	-	-

Specifications determined using the following information :

Air throw : * with JET+ diffuser for a residual speed of 0.1 m/s
* defined with èt OT/RT of 15°C (heating) and 7°C (cooling)
* with LP water or electric heating

Air speed : JET+ diffuser outlet
Sound pressure : measured 5 metres from unit, directivity 2, attenuation of 22 dB

Direct: speed obtained when wired directly to single-phase motor.
R3*: air supply speed obtained with autotransformer set to "3". Other operation points (5 in total) can be supplied on request by your agent using our technical selection software.

Three-phase 42AM performance

HEATING application - Three -phase motor								
Model	No. rows	Air supply speed 3-PH		Flow rate m³/h	Air speed m/s	Throw (metres) Wall-mounted	Suspended	Sound pressure dB(A)
35	1	HS	△	2 600	3.92	22	6	48
		LS	★	2 210	3.33	17	3,5	44
	2	HS	△	2 480	3.74	20	5	49
		LS	★	2 040	3.07	15	2,5	45
	3	HS	△	2 165	3.26	18	4,5	50
		LS	★	1 775	2.67	14	2	46
40	1	HS	△	4 000	4.35	25	8	55
		LS	★	3 480	3.79	21	5	51
	2	HS	△	3 800	4.13	23	7	55
		LS	★	3 310	3.60	18	4	51
	3	HS	△	3 400	3.70	22	6,5	56
		LS	★	2 960	3.22	17	3,5	52
45	1	HS	△	5 400	4.36	28	9	56
		LS	★	3 910	3.16	23	5,5	49
	2	HS	△	5 300	4.28	25	8	57
		LS	★	4 140	3.34	21	4,5	50
	3	HS	△	5 000	4.04	24	7,5	59
		LS	★	3 910	3.16	20	4	52
50	1	HS	△	7 500	4.46	30	10	56
		LS	★	5 740	3.41	26	7	50
	2	HS	△	6 900	4.10	28	9	57
		LS	★	5 400	3.21	24	6	51
	3	HS	△	6 500	3.86	26	8,5	58
		LS	★	5 020	2.98	23	5,5	52
63	1	HS	△	11 140	4.47	29	11,5	55
		LS	★	9 635	3.87	24	8,5	48
	2	HS	△	10 510	4.22	26	10,5	56
		LS	★	8 820	3.54	22	7,5	49
	3	HS	△	9 175	3.68	25	10	57
		LS	★	7 545	3.03	21	7	49
63S	1	HS	△	11 140	4.47	29	11,5	55
		LS	★	9 635	3.87	24	8,5	48

Specifications determined using the following information :

Air throw:
- * with JET+ diffuser for a residual speed of 0.1 m/s
- * defined with êt OT/RT of 15°C (heating) and 7°C (cooling)
- * with LP water or electric heating

Air speed: JET+ diffuser outlet
Sound pressure: measured 5 metres from unit, directivity 2, attenuation of 22 dB

Air flow and acoustic performance

42AM A		40		45		50		63	
Three-phase motor (3-phase 400V coupling)		HS △	LS ★	HS △	LS ★	HS △	LS ★	HS △	LS ★
Single-phase motor		Direct	-	Direct	-	Direct	-	Direct	-
Flow rate	**m³/h**	4400	3000	6000	4100	8000	5500	11500	8800
Air stream	**m**	15	8	14	9	16	10	19	14
Sound pressure	**dB(A)**	51	43	54	46	57	47	55	50

Specifications determined using the following information :
Air stream:* with JET+ diffuser for a residual speed of 0.1 m/s
Sound pressure: * measured 8 metres from unit, directivity 2, attenuation of 26 dB

Hot Water - Single-phase motor

Inlet/Outlet water temperature, °C		42AM351 Air flow rate (m³/h) Direct 2600				42AM351 Air flow (m³/h) R3* 2360				42AM352 Air flow rate (m³/h) Direct 2400				42AM352 Air flow (m³/h) R3* 2030			
		"Air inlet dry-bulb temperature (°C)"				"Air inlet dry-bulb temperature (°C)"				"Air inlet dry-bulb temperature (°C)"				"Air inlet dry-bulb temperature (°C)"			
		8	12	15	18	8	12	15	18	8	12	15	18	8	12	15	18
80-60	**Hc (kW)**	11.8	10.9	10.2	9.5	11.4	10.5	9.8	9.2	20.2	18.6	17.4	16.3	18.6	17.1	16	15
60-40	**Hc (kW)**	7.1	6.2	5.5	4.8	6.8	5.9	5.2	4.6	12.1	10.5	9.3	8.1	11.1	9.6	8.5	7.4
45-35	**Hc (kW)**	5.9	4.9	5.5	3.6	5.6	4.8	4.1	3.5	10.0	8.5	7.3	6.1	9.2	7.8	6.7	5.6

Inlet/Outlet water temperature, °C		42AM353 Air flow rate (m³/h) Direct 2075				42AM353 Air flow (m³/h) R3* 1780				42AM401 Air flow rate (m³/h) Direct 4200				42AM401 Air flow (m³/h) R3* 3914			
		"Air inlet dry-bulb temperature (°C)"				"Air inlet dry-bulb temperature (°C)"				"Air inlet dry-bulb temperature (°C)"				"Air inlet dry-bulb temperature (°C)"			
		8	12	15	18	8	12	15	18	8	12	15	18	8	12	15	18
80-60	**Hc (kW)**	24.7	22.7	21.3	19.8	22.5	20.7	19.4	18.1	17.1	15.8	14.8	13.8	16.7	15.4	14.4	13.5
60-40	**Hc (kW)**	14.8	12.8	11.3	9.9	13.5	11.7	10.3	9	10.1	8.8	7.8	6.7	9.9	8.5	7.6	6.5
45-35	**Hc (kW)**	9.3	7.9	6.8	5.7	11.1	9.4	8.0	6.7	10.2	8.9	7.9	6.9	8.2	7.0	6.0	5.0

Inlet/Outlet water temperature, °C		42AM402 Air flow rate (m³/h) Direct 3800				42AM402 Air flow (m³/h) R3* 3550				42AM403 Air flow rate (m³/h) Direct 3450				42AM403 Air flow (m³/h) R3* 3220			
		"Air inlet dry-bulb temperature (°C)"				"Air inlet dry-bulb temperature (°C)"				"Air inlet dry-bulb temperature (°C)"				"Air inlet dry-bulb temperature (°C)"			
		8	12	15	18	8	12	15	18	8	12	15	18	8	12	15	18
80-60	**Hc (kW)**	30.2	27.8	26.1	24.4	29.2	27	25.3	23.6	38.2	35.2	32.9	30.7	36.7	33.8	31.7	29.5
60-40	**Hc (kW)**	18.3	16	14.3	12.5	17.8	15.5	13.8	12.1	23	20	17.7	15.4	22.1	19.2	17	14.8
45-35	**Hc (kW)**	15.0	12.8	11.1	9.4	14.5	12.3	10.7	9.0	19.0	16.1	13.8	11.6	18.2	15.4	13.3	11.1

Inlet/Outlet water temperature, °C		42AM451 Air flow rate (m³/h) Direct 5200				42AM451 Air flow (m³/h) R3* 4100				42AM452 Air flow rate (m³/h) Direct 4700				42AM452 Air flow (m³/h) R3* 3700			
		"Air inlet dry-bulb temperature (°C)"				"Air inlet dry-bulb temperature (°C)"				"Air inlet dry-bulb temperature (°C)"				"Air inlet dry-bulb temperature (°C)"			
		8	12	15	18	8	12	15	18	8	12	15	18	8	12	15	18
80-60	**Hc (kW)**	23.3	21.5	20.2	18.9	21.2	19.6	18.4	17.2	39.6	36.5	34.3	32	35.1	32.4	30.4	28.4
60-40	**Hc (kW)**	14.2	12.5	11.2	9.9	13	11.4	10.3	9	24.4	21.4	19.1	16.8	21.6	19	16.9	14.9
45-35	**Hc (kW)**	11.6	9.9	8.6	7.3	10.6	9.0	7.8	6.7	19.7	16.8	14.7	12.5	17.5	14.9	13.0	11.0

Inlet/Outlet water temperature, °C		42AM453 Air flow rate (m³/h) Direct 4550				42AM453 Air flow (m³/h) R3* 3650				42AM501 Air flow rate (m³/h) Direct 7100				42AM501 Air flow (m³/h) R3* 5700			
		"Air inlet dry-bulb temperature (°C)"				"Air inlet dry-bulb temperature (°C)"				"Air inlet dry-bulb temperature (°C)"				"Air inlet dry-bulb temperature (°C)"			
		8	12	15	18	8	12	15	18	8	12	15	18	8	12	15	18
80-60	**Hc (kW)**	51.9	47.8	44.8	41.9	45.6	42	39.4	36.8	30.8	28.5	26.7	25	28.3	26.2	24.5	22.9
60-40	**Hc (kW)**	32	28	25	22	28.2	24.6	21.9	19.2	18.5	16.2	14.3	12.5	17	14.8	13.1	11.4
45-35	**Hc (kW)**	25.9	22.1	19.2	16.3	25.6	21.8	18.9	16	15.3	13.0	11.3	9.5	14.0	11.9	10.4	8.7

Hc: heating capacity (kW)

Hot Water - Single-phase motor

Inlet/Outlet water temperature, °C		42AM502 Air flow rate (m³/h) Direct 6600				Air flow (m³/h) R3* 5380				42AM503 Air flow rate (m³/h) Direct 6200				Air flow (m³/h) R3* 5055			
		"Air inlet dry-bulb temperature (°C)"				"Air inlet dry-bulb temperature (°C)"				"Air inlet dry-bulb temperature (°C)"				"Air inlet dry-bulb temperature (°C)"			
		8	12	15	18	8	12	15	18	8	12	15	18	8	12	15	18
80-60	**Hc (kW)**	53.3	49.1	46	42.9	48.2	44.4	41.6	38.9	70.7	65.2	61.2	57.1	62.8	57.9	54.3	50.7
60-40	**Hc (kW)**	32	27.7	24.6	21.3	28.9	25	22.1	19.3	43.8	38.4	34.2	30.1	38.9	33.9	30.3	26.6
45-35	**Hc (kW)**	26.4	22.4	19.4	16.3	23.9	20.3	17.5	14.6	35.3	30.1	26.3	22.3	31.4	26.8	23.3	19.7

Inlet/Outlet water temperature, °C		42AM631 Air flow rate (m³/h) Direct 10450				Air flow (m³/h) R3* 8900				42AM632 Air flow rate (m³/h) Direct 9610				Air flow (m³/h) R3* 7630			
		"Air inlet dry-bulb temperature (°C)"				"Air inlet dry-bulb temperature (°C)"				"Air inlet dry-bulb temperature (°C)"				"Air inlet dry-bulb temperature (°C)"			
		8	12	15	18	8	12	15	18	8	12	15	18	8	12	15	18
80-60	**Hc (kW)**	45	41.6	39	36.4	42.4	39.1	36.7	34.2	79.6	73.4	68.9	64.3	71	65.5	61.4	57.4
60-40	**Hc (kW)**	26.8	23.1	20.4	17.7	25.2	21.7	19.2	16.6	48.6	42.5	37.8	33.1	43.4	37.8	33.6	29.4
45-35	**Hc (kW)**	22.3	18.9	16.4	13.7	21.0	22.1	15.3	12.8	39.6	33.8	29.4	24.9	35.4	30.1	26.2	22.1

Inlet/Outlet water temperature, °C		42AM633 Air flow rate (m³/h) Direct 8280				Air flow (m³/h) R3* 6270			
		"Air inlet dry-bulb temperature (°C)"				"Air inlet dry-bulb temperature (°C)"			
		8	12	15	18	8	12	15	18
80-60	**Hc (kW)**	100.4	92.6	86.9	81.2	84.7	78.2	73.3	68.5
60-40	**Hc (kW)**	63	55.5	49.8	44	53.3	46.9	42	37.1
45-35	**Hc (kW)**	50.3	43.0	37.6	32.3	42.5	36.4	31.8	27.1

Hc: heating capacity (kW)

Chilled water & hot water - Single-phase motor

Inlet/Outlet water temperature, °C		42AM353 Air flow rate (m³/h) Direct 1640				42AM403 Air flow rate (m³/h) Direct 2160				42AM453 Air flow rate (m³/h) Direct 3025				42AM503 Air flow rate (m³/h) Direct 4060				42AM633
		"Air inlet dry-bulb temperature (°C)"				"Air inlet dry-bulb temperature (°C)"				"Air inlet dry-bulb temperature (°C)"				"Air inlet dry-bulb temperature (°C)"				NA
		8	12	15	18	8	12	15	18	8	12	15	18	8	12	15	18	
80-60	**Hc (kW)**	21.4	19.7	18.5	17.2	28.9	26.6	24.9	23.2	40.6	37.4	35.1	33.8	54.8	50.6	47.4	44.3	
60-40	**Hc (kW)**	12.8	11.1	9.8	8.6	17.3	15	13.3	11.7	25	21.9	19.5	17.1	33.5	29.6	26.4	23.2	
45-35	**Hc (kW)**	10.6	8.9	7.6	6.4	14.3	12.0	10.3	8.7	20.3	17.3	14.9	12.6	27.4	23.4	20.2	17.1	

Inlet/Outlet water temperature, °C		42AM353 Relative humidity 50% Air flow rate (m³/h) Direct 1640			42AM403 Air flow rate (m³/h) Direct 2160			42AM453 Air flow rate (m³/h) Direct 3025			42AM4503 Air flow rate (m³/h) Direct 4060			42AM633
		"Air inlet dry-bulb temperature (°C)"			"Air inlet dry-bulb temperature (°C)"			"Air inlet dry-bulb temperature (°C)"			"Air inlet dry-bulb temperature (°C)"			NA
		23	25	27	23	25	27	23	25	27	23	25	27	
7-12	**TCC (kW)**	3.2	4.2	5.4	4.4	5.7	7.4	6.9	8.7	11.2	9.3	11.7	15.2	
	SCC (kW)	3.2	4.2	5	4.4	5.6	6.7	6.9	8.4	9.8	9.3	11.4	13.3	
8-13	**TCC (kW)**	2.8	3.8	4.7	3.9	5.1	6.5	6.2	7.8	9.9	8.35	10.6	13.4	
	SCC (kW)	2.8	3.8	4.6	3.9	5.1	6.2	6.2	7.7	9.2	8.35	10.5	12.4	
10-15	**TCC (kW)**	2.1	3	3.9	2.8	4	5.2	4.6	6.3	7.9	6.2	8.5	10.7	
	SCC (kW)	2.1	3	3.9	2.8	4	5.2	4.6	6.3	7.8	6.2	8.5	10.6	

Hot Water - Three-phase motor

Inlet/Outlet water temperature, °C		42AM351 Air flow (m³/h) HS 2600				Air flow (m³/h) LS 2210				42AM352 Air flow (m³/h) HS 2480				Air flow (m³/h) LS 2040			
		"Air inlet dry-bulb temperature (°C)"				"Air inlet dry-bulb temperature (°C)"				"Air inlet dry-bulb temperature (°C)"				"Air inlet dry-bulb temperature (°C)"			
		8	12	15	18	8	12	15	18	8	12	15	18	8	12	15	18
80-60	**Hc (kW)**	11.8	10.9	10.2	9.5	11.1	10.2	9.6	9	20.5	18.9	17.7	16.5	18.6	17.1	16.1	15
60-40	**Hc (kW)**	7.1	6.2	5.5	4.8	6.6	5.8	5.1	4.5	12.3	10.7	9.4	8.2	11.1	9.6	8.5	7.5
45-35	**Hc (kW)**	5.8	4.9	4.3	3.6	5.5	4.6	4.0	3.4	10.1	8.6	7.4	6.2	9.2	7.8	6.7	5.6

Inlet/Outlet water temperature, °C		42AM353 Air flow (m³/h) HS 2165				Air flow (m³/h) LS 1775				42AM401 Air flow (m³/h) HS 4000				Air flow (m³/h) LS 3480			
		"Air inlet dry-bulb temperature (°C)"				"Air inlet dry-bulb temperature (°C)"				"Air inlet dry-bulb temperature (°C)"				"Air inlet dry-bulb temperature (°C)"			
		8	12	15	18	8	12	15	18	8	12	15	18	8	12	15	18
80-60	**Hc (kW)**	25.3	23.3	21.8	20.3	22.5	20.7	19.4	18.1	16.8	15.5	14.5	13.6	15.9	14.7	13.8	12.9
60-40	**Hc (kW)**	15.2	13.1	11.6	10.1	13.4	11.6	10.3	9	9.9	8.6	7.6	5.6	9.4	8.2	7.2	6.3
45-35	**Hc (kW)**	12.5	10.6	9.1	7.6	11.1	9.3	8.0	6.7	8.3	7.0	6.1	5.1	7.9	6.7	5.7	4.8

Hc: Heating capacity (kW)
TCC: total cooling capacity
SCC: sensible cooling capacity (kW)

Hot Water - Three-phase motor

Inlet/Outlet water temperature, °C		42AM402								42AM403							
		Air flow (m³/h) HS				Air flow (m³/h) LS				Air flow (m³/h) HS				Air flow (m³/h) LS			
		3800				3310				3400				2960			
		"Air inlet dry-bulb temperature (°C)"				"Air inlet dry-bulb temperature (°C)"				"Air inlet dry-bulb temperature (°C)"				"Air inlet dry-bulb temperature (°C)"			
		8	12	15	18	8	12	15	18	8	12	15	18	8	12	15	18
80-60	**Hc (kW)**	30.2	27.8	26.1	24.4	28.3	26.1	24.4	22.8	37.8	34.9	32.7	30.5	35	32.2	30.2	28.1
60-40	**Hc (kW)**	18.3	16	14.3	12.5	17.2	15	13.3	11.6	22.8	19.8	17.5	15.3	21.1	18.2	16.2	14.1
45-35	**Hc (kW)**	15.0	12.0	11.1	9.4	7.7	6.5	5.6	4.7	18.8	15.9	13.7	11.5	17.4	14.7	12.6	10.6

Inlet/Outlet water temperature, °C		42AM451								42AM452							
		Air flow (m³/h) HS				Air flow (m³/h) LS				Air flow (m³/h) HS				Air flow (m³/h) LS			
		5400				3910				5300				4140			
		"Air inlet dry-bulb temperature (°C)"				"Air inlet dry-bulb temperature (°C)"				"Air inlet dry-bulb temperature (°C)"				"Air inlet dry-bulb temperature (°C)"			
		8	12	15	18	8	12	15	18	8	12	15	18	8	12	15	18
80-60	**Hc (kW)**	23.6	21.8	20.5	19.2	20.8	19.2	18.1	16.9	41.9	38.7	36.3	33.9	37.2	34.3	32.2	30.1
60-40	**Hc (kW)**	14.4	12.7	11.4	10.1	12.8	11.2	10.1	8.9	25.8	22.6	20.2	17.8	22.9	20.1	17.9	15.8
45-35	**Hc (kW)**	11.8	10.0	8.7	7.4	10.4	8.8	7.7	6.6	20.9	17.8	15.5	13.2	18.5	15.8	13.8	11.7

Inlet/Outlet water temperature, °C		42AM453								42AM501							
		Air flow (m³/h) HS				Air flow (m³/h) LS				Air flow (m³/h) HS				Air flow (m³/h) LS			
		5000				3910				7500				5740			
		"Air inlet dry-bulb temperature (°C)"				"Air inlet dry-bulb temperature (°C)"				"Air inlet dry-bulb temperature (°C)"				"Air inlet dry-bulb temperature (°C)"			
		8	12	15	18	8	12	15	18	8	12	15	18	8	12	15	18
80-60	**Hc (kW)**	54.7	50.4	47.3	44.1	47.5	43.8	41.1	38.3	31.5	29.1	27.3	25.5	28.4	26.2	24.6	23
60-40	**Hc (kW)**	33.8	29.6	26.4	23.2	29.3	25.6	22.9	20.1	18.9	16.5	14.6	12.7	17.1	14.8	13.1	11.4
45-35	**Hc (kW)**	27.3	23.3	20.3	17.2	23.7	20.2	17.6	14.9	15.6	13.2	11.5	9.7	14.1	12.0	10.4	8.7

Inlet/Outlet water temperature, °C		42AM502								42AM503							
		Air flow (m³/h) HS				Air flow (m³/h) LS				Air flow (m³/h) HS				Air flow (m³/h) LS			
		6900				5400				6500				5020			
		"Air inlet dry-bulb temperature (°C)"				"Air inlet dry-bulb temperature (°C)"				"Air inlet dry-bulb temperature (°C)"				"Air inlet dry-bulb temperature (°C)"			
		8	12	15	18	8	12	15	18	8	12	15	18	8	12	15	18
80-60	**Hc (kW)**	54.4	50.1	47	43.9	48.3	44.5	41.7	38.9	72.7	67	62.8	58.7	62.5	57.6	54	50.5
60-40	**Hc (kW)**	32.7	28.4	25.1	21.8	28.9	25.1	22.2	29.3	44.9	39.4	35.1	30.9	38.7	33.8	30.2	26.5
45-35	**Hc (kW)**	27.0	22.9	19.8	16.6	24.0	20.3	17.5	14.6	36.3	30.9	27.0	22.9	31.3	26.7	23.2	19.6

Inlet/Outlet water temperature, °C		42AM631								42AM632							
		Air flow (m³/h) HS				Air flow (m³/h) LS				Air flow (m³/h) HS				Air flow (m³/h) LS			
		11140				9635				10510				8820			
		"Air inlet dry-bulb temperature (°C)"				"Air inlet dry-bulb temperature (°C)"				"Air inlet dry-bulb temperature (°C)"				"Air inlet dry-bulb temperature (°C)"			
		8	12	15	18	8	12	15	18	8	12	15	18	8	12	15	18
80-60	**Hc (kW)**	46.1	42.5	39.9	37.2	53.7	40.3	37.8	35.3	83	76.6	71.8	67.1	76.3	70.4	66	61.7
60-40	**Hc (kW)**	27.4	23.7	20.9	18.2	25.9	22.4	19.8	17.1	50.7	44.4	39.5	34.6	46.7	40.8	36.2	31.7
45-35	**Hc (kW)**	22.8	19.4	16.8	14.0	21.6	18.3	15.8	13.2	41.4	35.3	30.6	26.0	38.0	32.4	28.2	23.8

Hc: heating capacity (kW)

Inlet/Outlet water temperature, °C		42AM633 Air flow (m³/h) HS 9175				Air flow (m³/h) LS 7545			
		"Air inlet dry-bulb temperature (°C)"				"Air inlet dry-bulb temperature (°C)"			
		8	12	15	18	8	12	15	18
80-60	**Hc (kW)**	106.6	98.3	92.2	86.2	94.9	87.6	82.2	76.8
60-40	**Hc (kW)**	66.7	58.8	52.8	46.9	59.6	52.5	47.1	41.6
45-35	**Hc (kW)**	53.5	45.6	39.9	34.2	47.6	40.7	35.6	30.5

Hc: heating capacity (kW)

Electric motor specifications

Model	Motor	Speed of rotation rpm	Nom. current A	Abs. pressure W	IP	Thermal cut-out	Class	Operating temp.
Heating								
35EC	THREE-PHASE 230/400 V – 50 Hz	HS - △ 1385	0,35	110	44	YES 6.3 A - 165 °C	F	-40 °C / +60 °C
		LS - ★ 1175	0,15	70				-40 °C / +70 °C
40EC/40A		HS - △ 1404	0,5	260	54			
		LS - ★ 1176	0,3	170				
45EC/45A		HS - △ 1385	1,13	550				
		LS - ★ 1040	0,64	380				
50EC/50A		HS - △ 1391	1,51	770				
		LS - ★ 1176	0,9	520				
63EC/63A		HS - △ 1000	1,3	590				
		LS - ★ 750	0,63	250				
63S		HS - △ 1000	1,3	590				
		LS - ★ 750	0,63	250				
Heating								
35EC	SINGLE-PHASE 230 V – 50 Hz	Direct 1330	0,7	150	44	YES 6.3 A - 165 °C	F	-40 °C / +60 °C
40EC/40A		Direct 1400	1,3	300	54			-40 °C / +70 °C
45EC/45A		Direct 1380	2,01	480				
50EC/50A		Direct 1403	2,78	630				
63EC/63A		Direct 913	2,6	580				
Cooling								
35EF		Direct 880	0,3	70	44	YES 6.3 A - 165 °C	F	40 °C/+60 °C
40EF		Direct 890	0,5	110	54			40 °C/+70 °C
45EF		Direct 933	0,6	140				
50EF		Direct 890	1	230				
63EF	-	-	-	-	-	-	-	-

Coil specifications

		43			40			45			50			63		
WATER COIL	**Number of heating rows**	1	2	3	1	2	3	1	2	3	1	2	3	1	2	3
	Number of cooling rows															
	Coil capacity (L)	0,68	1,18	1,66	0,96	1,59	2,28	1,38	2,27	3,22	2,18	3,38	4,55	2,97	4,7	6,4
	Connection diameter	¾"						1"			1" ¼					
	Connection type	Threaded unions 243 GCU F/M														
	Maximum operating pressure	8 bar														
	Test pressure	16 bar														
	Max T°	110°C														

Options and accessories

- Wall bracket, ceiling bracket, IPN additional kit
- Filter box
- 2-channel mixing box with built-in filter
- Specific diffuser (on door, high-level etc.)
- Damper and outdoor kit
- IP30 or IP54 room thermostat
- LS/HS switch for 3-PH fan motor assembly
- 5-speed autotransformer for single-phase AC FMAs

Operating principle

Air heaters are installed at the end of a central heating or cooling system (boilers, air-source or water-source heat pump, reversible production unit).

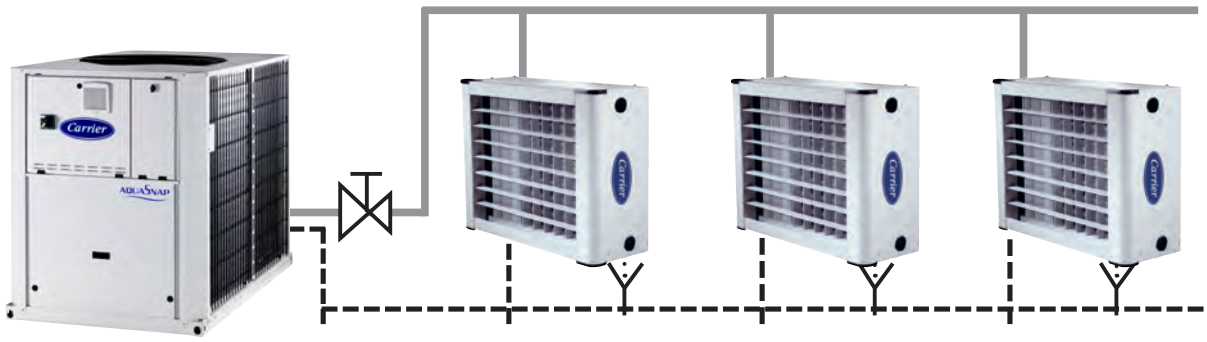

Description

- High-efficiency fan motor assembly

Silent FMA featuring an aluminium epoxy polyester-coated airfoil propeller to ensure the best compromise between air flow efficiency and acoustic comfort.

The ROTOREX design (windings inserted in the fan hub keeps the motor cool to ensure that it operates at optimum efficiency.

Two versions are available :

- THREE-PHASE 2-speed (accessory: LS/HS switch)
- SINGLE-PHASE 1 variable speed (accessory: 5-speed autotransformer)

- Casing
  - Elegant galvanised steel casing, pre-painted with RAL 7035 (light grey).
  - Condensate drain pan built-in for cooling applications, featuring an antibacterial design (perforated bottom) and quick-release fitting.
  - Intake section optimised for improved air flow performance and acoustic comfort level.
  - Advantages:
    - Its classic design means that it can easily blend into the architecture of the installation site.
    - No need to add an unsightly condensate drain pan.
    - Condensate pipes quick and extremely simple to connect, without any need for a clamp.

- Diffuser

Double deflection diffuser made from rigid aluminium sections, based on the BERNOULLI fluid flow principle and on NACA0012 airfoils, creating a high induction rate on the primary air, in order to increase the air throws, limit the stratification phenomenon and thereby reduce energy consumption.

- Basic version (for 42AM 63S only):
  - Single-deflection diffuser with directional louvre
  - Light-grey galvanised steel louvre
- JET+ version (fitted as standard):
  - Double deflection diffuser
  - JET+ aluminium louvre with NACA0012 airfoil design
  - Each louvre is directional
  - Advantages:
    - Air flows adjustable in 4 directions for optimum coverage of the area to be handled, while limiting draughts.
    - Laminar air flow for better acoustic comfort (zero turbulence at the diffuser outlet).
    - Increased air speed, thanks to the resulting aerodynamics (depression along lower surface of blade) due to the curve of the airfoil, thereby increasing the air throws and the induction rate.
    - Limited stratification phenomenon.
    - Reduced building warm-up times:
    - Recorded energy savings of 15 to 20%.

■ Heat exchanger

HIGH EFFICIENCY heat exchanger coil with tapered intake baffles, to help pressurise the finned block, available in four versions:

- LP hot or cold water version – Available with 1, 2 or 3 rows:
  - Copper tube Ø 9.52 mm
  - Embossed aluminium fins – Thickness 10/100 mm
  - Fin spacing 2.1 mm
  - Equilateral geometry 32 mm
  - Advantage: Excellent thermal yield (dry transfer coefficient > 50 W/m².k)

■ Codification

Family	Size	No. of rows	Function	Motor type	(free)	Ceiling	Position of hydraulic connections
42AM	35	-	EC	M	-	S	DG
	40	1	EF	T		M	L-
	45	2	S-				R-
	50	3	A-				
	63						

Family: 42AM
Size: 35 to 63
Number of rows: - = Ventilation only (42AMA), 1 = 1 row, 2 = 2 rows, 3 = 3 rows
Function: HW = hot water, SW = hot and cold water, S- = Logistics, A- = ventilation only (42AMA)
Motor type: M = single-phase 230V, T = three-phase 400V
Installation type: S = Ceiling suspended or wall mounted, M = Wall mounted only
Hydraulic connections position: LR = Left or right, L- = left, R- = right

Example:

42AM 35 1 HW M – S LR
Family: 42AM
Size: 35
Number of rows: 1
Function: HW (hot water)
Motor: M (single-phase)
Installation: S (ceiling suspended or wall mounted)

Dimensions

42AM air heater

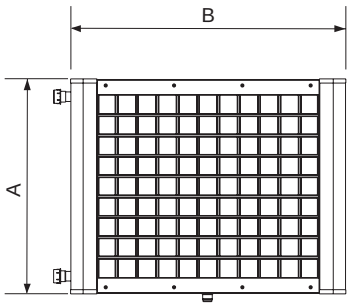

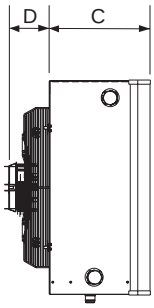

Size	A	B	C	D	Weight (kg)		
	mm				1 row	2 rows	3 rows
35	460	646	286	101	21	24	26
40	555	700	286	142	30	32	34
45	618	813	286	142	40	42	44
50	714	918	336	142	50	53	56
63	874	1050	336	142	62	67	72
63S	872	1050	295	126	60	-	-

42AM A destratifier

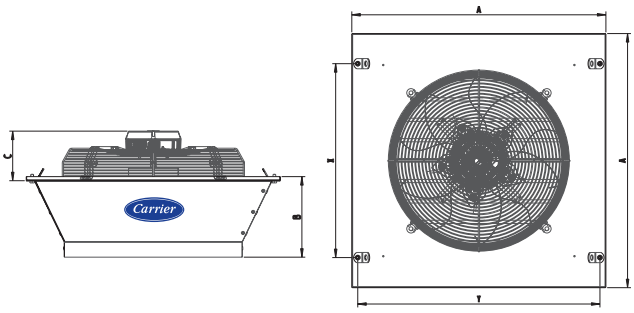

Size	A	B	C	X	Y	Weight (kg)
40	586	183	143	370	552	17
45	666	212	143	470	632	22
50	747	225	143	570	712	25
63	907	273	143	705	872	33

Ceiling

42AM air heater

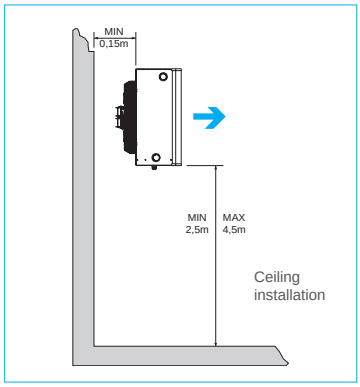

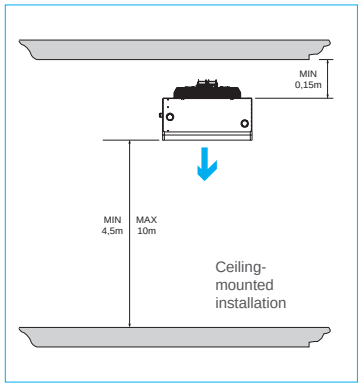

42AM A destratifier

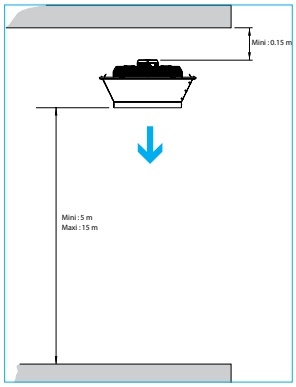

Assembly accessories

A different assembly for each use.

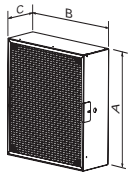

Size	A	B	C	Codes
35	440		220	7185105
40	520			7185106
45	600			7185107
50	680			7185108
63/63S	840			7185110

Filter box (G1 filter in accordance with EN 779)
Prevents premature clogging of exchanger coils
Not ductable

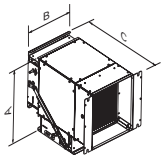

Size	A	B	C	Codes
35	585	455	788	7185127
40	665	535	868	7185128
45	745	615	949	7185129
50	825	695	1029	7185131
63	985	855	1189	7185132

2-channel mixing box with built-in filter
Adjusts the supply of fresh air to levels required by current regulations and mixes it with return air.
Built-in G1 filter and connecting flange for cubic ducts.
Air access sides configurable on-site.

DIFFUSION MODULE

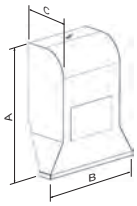

Size	A	B	C	Codes
35	750	700	300	7185133
40	850	750	325	7185134
45	970	850	350	7185135
50	1100	970	375	7185136
63/63S	1250	1170	400	7185137

Diffuser on door
Create an air curtain that limits energy loss when doors are opened.

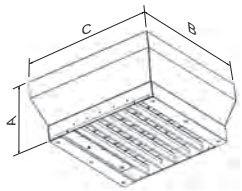

Size	A	B	C	Codes
35	-	-	-	-
40	178	555	522	7185138
45	136	637	618	7185139
50	132	740	714	7185140
63/63S	282	872	814	7185141

Diffuser for large spaces
Reduction cone for increasing the air throws.

ASSEMBLY SUPPORT ACCESSORIES

Size	Codes
All	7181226
35 to 45	7181228
50 to 63/63S	7181230

Wall bracket

Additional kit for fastening on an IPN

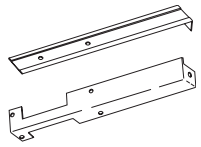

Size	Codes
All	7282116

Suspension support for ceiling mounting

DUCT ACCESSORIES

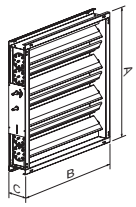

Size	A	B	C	Codes
35	443	443	130	7043051
40	523	523		7043052
45	603	603		7043053
50	683	683		7043054
63	843	843		7043055

Antifreeze damper

Electrical accessories

ELECTRICAL AND USER SAFETY

Codes	
0596142 0596147	**Padlockable proximity switch** Available in a 1 or 2-speed version, this accessory must be placed at least 2 metres from any rotating part, to comply with French standard IT 246, Art. 4-7-3, and EC requirements.

Use	Circuit breaker unit - FMA 1-PH heating	Circuit breaker unit - FMA 1-PH cooling	Circuit breaker unit - 3-PH
35	7252526	7252523	7252523
40	7252527	7252525	7252525
45	7252528	7252526	7252527
50	7252529	7252526	7252527
63/63S	7252529	-	7252527

THERMOSTATS

Codes	**IP30 indoor environment thermostat – SINGLE-PHASE installation**
5201027	5201027: heating only or cooling only (RTR-E 6721) Inductive breaking capacity 4 A
5201028	5201028: heating and cooling with manual toggle switch (RTR-E 6731) Inductive breaking capacity 2 A

Codes	**IP54 industrial environment thermostat – THREE-PHASE installation**
7113335	7133335: 1 stage
7113336	7133336: 2 stages

SUPPLY AIR SPEED SELECTION

Codes	**LS/HS switch** For 3-phase motor, selects two motor rotation speeds and stop.
5201027	

Codes	**Autotransformer with selector switch (3.5 A)** Adjusts the voltage on single-phase motors with one variable speed to achieve up to five supply air speeds.
5201027	

42GW

Nominal cooling capacity 1.5-8.7 kW
Nominal heating capacity 1.3-11.6 kW

IDROFAN

Easy installation

Central air diffusion

Low energy consumption

Improved comfort

Elegant air inlet grille

Extremely quiet operation

The Carrier Idrofan cassette 42GW_AC/LEC offers a modern solution for a wide variety of small and medium- sized commercial and residential applications. It is ideally suited for large offices, shops, restaurants and bars, hotel receptions, meeting rooms, banks, laboratories, showrooms, etc.

The product series incoporates innovative technologies, resulting in a product that is easy to select with fast, simple and economical system installation.

Physical data

42GW		200			300			400		
Coil type		2 pipes			2 pipes			2 pipes		
Fan speed*		1	2	3	1	2	3	1	2	3
Air flow	l/s	183	125	100	204	140	89	249	173	134
Cooling mode										
Total cooling capacity	kW	2,39	1,78	1,55	4,02	2,89	1,88	4,74	3,52	2,8
Sensible cooling capacity	kW	2,01	1,5	1,3	3,07	2,19	1,42	3,67	2,7	2,1
Water flow rate	l/s	0,11	0,09	0,08	0,19	0,14	0,09	0,23	0,17	0,13
	l/h	410	310	270	690	500	320	810	600	480
Water pressure drop	kPa	10	5	4	14	7	3	18	10	6
Heating mode										
Heating capacity	kW	3,2	2,5	2,2	4,53	3,72	2,32	6,2	4,61	3,7
Water pressure drop	kPa	8	5	4	13	7	3	14	8	5
Water content	l	0.55			1.1			1.1		
Sound power level	dB(A)	49	40	36	53	44	35	57	48	42
Sound pressure level**	dB(A)	40	31	27	44	35	26	48	39	33
Power input	W	58	35	25	58	34	17	99	58	38
Current input	A	0.27	0.17	0.12	0.24	0.14	0.07	0.41	0.24	0.16
Eurovent energy class FCEER/FCCOP		D/D			C/C			D/D		
Electric heater (high capacity)	W	1500			2500			2500		
Current input (high capacity)	A	6.3			10.4			10.4		

42GW		500			600			701		
Coil type		2 pipes			2 pipes			2 pipes		
Fan speed*		1	2	3	1	2	3	1	2	3
Air flow	l/s	272	199	147	321	229	139	402	299	166
Cooling mode										
Total cooling capacity	kW	6,1	4,45	3,36	7,22	5,49	3,71	8,67	6,53	4,06
Sensible cooling capacity	kW	4,5	3,37	2,53	5,46	4,09	2,69	6,4	4,9	2,99
Water flow rate	l/s	0,29	0,21	0,16	0,34	0,26	0,18	0,41	0,31	0,19
	l/h	1050	760	580	1240	940	640	1490	1120	700
Water pressure drop	kPa	22	12	7	11	6	3	20	12	5
Heating mode										
Heating capacity	kW	8,07	5,97	4,48	9,99	7,4	4,61	11,7	9,3	5,21
Water pressure drop	kPa	17	10	6	10	6	3	18	11	5
Water content	l	1.6			2.4			2.4		
Sound power level	dB(A)	49	40	35	54	46	38	59	52	40
Sound pressure level**	dB(A)	40	31	26	45	37	29	50	43	31
Power input	W	66	41	28	88	61	34	125	92	44
Current input	A	0.30	0.17	0.12	0.46	0.27	0.14	0.63	0.41	0.19
Eurovent energy class FCEER/FCCOP		C/C			C/C			C/C		
Electric heater (high capacity)	W	3000			3000			3000		
Current input (high capacity)	A	12.5			12.5			12.5		

Based on Eurovent conditions:
Cooling mode (2 and 4-pipe coil): entering air temperature 27°C db/1 9°C wb, entering/leaving water temperature 7/12°C, high fan speed.
Heating mode (2-pipe coil): entering air temperature 20°C, entering water temperature 50°C, high fan speed, water flow rate as cooling mode.
Heating mode (4-pipe coil): entering air temperature 20°C, entering water temperature 70°C, high fan speed, water Δt = 10 K
* Fan speeds: 1 = high, 2 = medium, 3 = low
** Sound pressure level and NR values are based on a hypothetical sound attenuation for the room of -9 dB(A).

Note: Electrical heater version is available on all 2-pipe units.

42GW		200			300			400		
Coil type		4 pipes			4 pipes			4 pipes		
Fan speed*		1	2	3	1	2	3	1	2	3
Air flow	l/s	183	125	100	204	140	89	249	173	134
Cooling mode										
Total cooling capacity	kW	2	1,5	1,3	3,4	2,7	2	4,05	3,24	2,57
Sensible cooling capacity	kW	1,87	1,4	1,19	2,68	2,09	1,5	3,35	2,61	2,05
Water flow rate	l/s	0,1	0,07	0,06	0.17	0.13	0.10	0.20	0.16	0.12
	l/h	350	260	230	580	460	340	700	560	440
Water pressure drop	kPa	13	8	6	11	7	4	15	10	6
Water content	l	0.4			1.1			1.1		
Heating mode										
Heating capacity	kW	1,9	1,44	1,24	6,37	5,1	3,61	6,81	5,81	5,01
Water flow rate	l/s	0,05	0,04	0,03	0.15	0.12	0.09	0.16	0.14	0.12
	l/h	170	130	110	548	439	310	585	499	430
Water pressure drop	kPa	35	21	16	25	17	9	29	22	17
Water content	l	0.1			0.6			0.6		
Sound power level	dB(A)	49	40	36	53	44	35	57	48	42
Sound pressure level**	dB(A)	40	31	27	44	35	26	48	39	33
Power input	W	58	35	25	54	32	16	94	55	35
Current input	A	0.27	0.17	0.12	0.24	0.14	0.07	0.41	0.24	0.16
Eurovent energy class FCEER/FCCOP		E/E			C/B			D/C		

42GW		600			701		
Coil type		4 pipes			4 pipes		
Fan speed*		1	2	3	1	2	3
Air flow	l/s	321	229	139	402	299	166
Cooling mode							
Total cooling capacity	kW	6,67	4,99	2,99	7,61	6,06	3,19
Sensible cooling capacity	kW	5,1	3,8	2,25	6,01	4,73	2,4
Water flow rate	l/s	0.32	0.24	0.14	0.39	0.32	0.18
	l/h	1140	860	510	1310	1040	550
Water pressure drop	kPa	24	14	5	30	20	6
Water content	l	2.4			2.4		
Heating mode							
Heating capacity	kW	11,5	8,9	6,01	14,61	11,5	7,31
Water flow rate	l/s	0.27	0.21	0.14	0.35	0.27	0.17
	l/h	989	765	516	1247	989	628
Water pressure drop	kPa	13	9	4	20	13	6
Water content	l	1.2			1.2		
Sound power level	dB(A)	54	46	38	59	52	40
Sound pressure level**	dB(A)	45	37	29	50	43	31
Power input	W	88	61	34	125	92	44
Current input	A	0.46	0.27	0.14	0.63	0.41	0.19
Eurovent energy class FCEER/FCCOP		C/B			D/C		

Based on Eurovent conditions:
Cooling mode (2 and 4-pipe coil): entering air temperature 27°C db/1 9°C wb, entering/leaving water temperature 7/12°C, high fan speed.
Heating mode (2-pipe coil): entering air temperature 20°C, entering water temperature 50°C, high fan speed, water flow rate as cooling mode.
Heating mode (4-pipe coil): entering air temperature 20°C, entering water temperature 70°C, high fan speed, water Δt = 10 K
* Fan speeds: 1 = high, 2 = medium, 3 = low
** Sound pressure level and NR values are based on a hypothetical sound attenuation for the room of -9 dB(A).

Note: Electrical heater version is available on all 2-pipe units.

Electrical data

42GW		209			309			409		
Coil type		2 pipes			2 pipes			2 pipes		
Voltage (d.c.)	V	10	6	2	10	6	2	10	6	2
Air flow	l/s	183	125	100	204	140	89	249	173	134
Power input	W	29	13	9	33	14	7	57	23	13
Current input	A	0.19	0.1	0.08	0.27	0.13	0.08	0.46	0.2	0.12
Eurovent energy class FCEER/FCCOP		B/B			A/A			B/B		

Dimensions and weights				
All units		**42GW 200/209**	**42GW 300/309**	**42GW 400/409**
Dimensions				
Height	mm	298	298	298
Length	mm	569/627	569/627	569/627
Depth	mm	569/627	569/627	569/627
Grille dimensions				
Height	mm	36	36	36
Length	mm	720	720	720
Depth	mm	720	720	720
Weight unit/weight grille	kg	14.8/3	16.5/3	16.5/3

42GW		509			609			709		
Coil type		2 pipes			2 pipes			2 pipes		
Voltage (d.c.)	V	10	6	2	10	6	2	10	6	2
Air flow	l/s	272	199	147	321	229	139	443	299	166
Power input	W	25	12	7	45	23	9	115	40	11
Current input	A	0.23	0.12	0.08	0.4	0.22	0.1	0.89	0.35	0.12
Eurovent energy class FCEER/FCCOP		A/A			A/A			A/A		

Dimensions and weights				
All units		**42GW 500/509**	**42GW 600/609**	**42GW 700/709**
Dimensions				
Height	mm	302	302	302
Length	mm	822/879	822/879	822/879
Depth	mm	822/879	822/879	822/879
Grille dimensions				
Height	mm	37	37	37
Length	mm	960	960	960
Depth	mm	960	960	960
Weight unit/weight grille	kg	37/5	39.6/5	39.6/5

Note: Where two values are given the second value applies to units with two or four-way valves.

Options/accessories

- Two- or four-way valves
- Fresh air inlet
- Conditioned air to adjacent room kit
- Electric heater
- Auxiliary drain pan

Features and advantages

Features

- The 42GW_AC is available with a new-generation three speed AC motor. The 42GW_LEC is available with a variable-speed Low Energy Consumption EC motor.
- The 42GW is normally installed in suspended ceilings and offers two, three or four way air distribution. The units maintain precise temperature and humidity conditions preventing draughts and stale air zones.
- The elegant air inlet grille blends aesthetically with any room decor.
- The Carrier hydronic cassette is available in six sizes suitable for a wide range of applications, with air flows from 100 to 402 l/s (360 to 1450 m^3/h). The Idrofan cassette offers an ultra-low-noise solution for applications where a low noise level is the most important selection parameter.

General features

- The low-profile 42GW is light and easy to install. The small chassis fits neatly with standard ceiling tiles and is simple to install wherever it is needed.
- Four-way air distribution gives individual comfort while for localised control each diffuser may be adjusted or even shut down completely.
- Integrated, factory-mounted cooling and heating coils, two-pipe or two-pipe with electric heater, and four-pipe applications.

Designed for silence

- The 42GW units were designed for extremely quiet operation with sound levels that set new comfort standards for buildings. The unique Carrier design of the centrifugal fan ensures extra-quiet operation.
- The new fan/motor assembly design ensures whisper-quiet operation, two times less than the previous generation. Particular attention has been given to the low fan speed.
- The special design of the diffuser ensures rapid blending of the supply and room air. Conditioned air is directed along the ceiling then evenly distributed throughout the room. Return air enters the cassette unit through a large grille. It is then cleaned by an easily removable, washable synthetic filter, treated and recirculated.

Motors

- The Idrofan cassette is available with a three-speed AC motor, with ultra-low noise levels to make it one of the quietest cassettes on the market.
- The Idrofan cassette is also available with variable-speed LEC (Low Energy Consumption) EC motors, that meet the new building energy performance objectives. The LEC solution enhances unit performance offering:
  - Reduced energy costs - the LEC motor reduces cassette power consumption by 50 to 75%. The LEC option meets the new building energy management regulations.
  - Improved comfort - the LEC motor with variable fan speed reduces operating noise levels compared to multi-speed fans, offering ultra-quiet air flow down to very low operating levels. With the NTC controller, a maximum fan speed can be set to allow better sound level management.
  - Maximum flexibility - auto-adaptive air flow rate adjustment from 0 to 100% ensures perfect cooling and heating conditions in the room.
  - Extended life time - LEC motors with brushless techno-logy use a lower fan motor temperature for extended operating life.

Filters

- The standard filter for the Idrofan cassette range has a pleated filtration surface, resulting in a 87% larger surface than a conventional filter, with the following additional advantages:
  - Lower air flow per unit area, resulting in lower pressure drop and reduced noise level.
  - The average interval between filter cleaning is three times longer, compared to standard filters.
  - The filter material is polypropylene and the grade is EU1.
- In the Idrofan cassette range the filter is located inside the grille of the unit. Cleaning cannot be easier: the filter can be manually unclipped from the grille support. The filter frame is pulled down and the filter can then be removed easily. Re-assembly is just as easy, reversing the sequence. Washable filters are supplied as standard.

Drain pump

- High-performance autonomous condensate drain pump encased in a special sound-insulating material for improved fast and quiet condensate removal.
- The main Idrofan cassette drain pan has been improved using the latest composite material for increased noise absorption, easier cleaning and coil drain water transfer to the drain pump.

Control box

- All units are equipped with a control box containing the terminal blocks. The box is positioned on the outside of the unit with a fuse for unit and control protection. The control box panel can easily be opened by simply removing one fixing screw. For wiring connection details, please refer to the appropriate wiring diagrams.

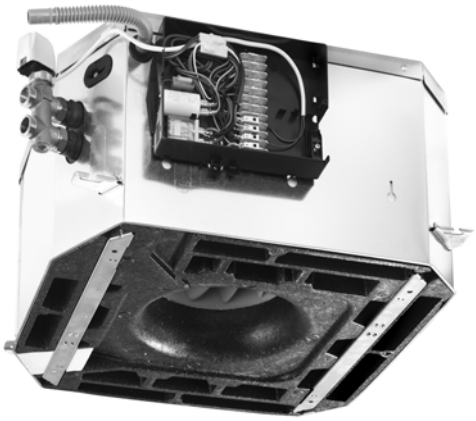

Carrier controller range

- The Idrofan cassette is available with the complete range of Carrier controllers. Several tests ensure easy installation. The number of available controllers offers more and enhanced features, and easy selection according to application needs.

Electronic thermostat A-B-C-D types

- Carrier electronic thermostat range is available for all Carrier hydronic terminals ranges:
  - Type A: Two-pipe application with AC motors
  - Type B: Four-pipe or two-pipe applications with electric heaters with AC motors
  - Type C: Two-pipe application with EC motors
  - Type D: Four-pipe or two-pipe applications with electric heaters with EC motors
- The thermostat for FCU with EC motors option is managing 3 configurable discrete speeds through 0-10 V signal.
- The thermostats have an elegant square shape with a coaxial knob to set room temperature and 3 buttons to set up fan speed, cooling or heating mode, and On/Off, as desired by the customer.
- Wall-mounted controls are easily and discreetly integrated in any room environment.
- The electronic thermostats set range is from 10 °C to 30 °C with the possibility to limit the temperature in public buildings where low energy consumption is a key requirement via a dip-switch inside the control (Cooling range 23 °C/30 °C, heating range 10 °C/21 °C).

The following Features are available as setting:

- **Auto fan:** The fan speed is automatically set by the control; when the room temperature is far from the set point, high fan speed is selected. As the room temperature approaches the desired value, the fan speed decreases until the minimum speed is reached.
- **Automatic changeover:** Automatic changeover from the cooling to heating mode, based on the water temperature, ensures that the ideal room temperature is maintained.
- **Remote changeover:** Automatic changeover from cooling to heating mode, based on the remote signal from the monitoring system.
- **Warm and cold draught protection:** This feature stops the fan when the set point condition is satisfied and the water temperature is too low or too high, ensuring that air that is too cold or too warm does not cause discomfort to the room occupants.
- **Air sensor:** This is unit-mounted – if the control is wall mounted, a second air sensor located in the control can be used for fine tuning of the desired room temperature.
- **Frost protection:** This function ensures that the room temperature is kept above a minimum level. If the unit is in off mode, and the room temperature drops below 7 °C, frost protection is enabled and the unit operates in heating mode until the temperature rises above 9 °C. At this point the unit is switched off again.
- **Booster heating management optimization (available with electric heater option):** If the water temperature is below 30 °C the system will work in the heat demand mode and the electric heater will be the only available heating source. If the water temperature is above 35 °C the system will work in the booster heating mode, energising the water valve and electric heater together. The booster heating function will be deactivated if the water temperature is above 45 °C (the electric heater will be de-energised).
- **Energy saving:** This feature allows saving energy when the room is unoccupied, without the need to switch off the unit. When the energy-saving button is pressed, the actual set point will be modified as follows, without changing the position of the set point selection knob:
  - Cooling mode: Set point raised by 4 °C
  - Heating mode: Set point lowered by 4 °C

  The unit will resume normal operation, once the energy saving button is pressed again.
- **LED intensity:** For offices or light commercial applications, 10 seconds after the latest use of the user interface, all the necessary LEDs are lighted on at a reduced intensity. As soon as the user touches again the user interface, LED have to come back to normal light. In order not to disturb hotels customers, the thermostat can be configured from Night Mode to Dark Mode: 10 seconds after the latest use of user interface, all the LEDs are switched off. As soon as the user touches again the user interface, LEDs of the current condition are switched on with normal light.
- **Air sampling:** If no fan request is made and the Air sampling jumper is in ON position, the control performs the Air sampling function: the air is moved in the room, thermal stratification is reduced, ensuring a more reliable ambient temperature reading.
- **Continuous fan:** If there is no fan request and the Continuous fan jumper is in ON position, the control selects fan speed Low, Medium or High according to the fan-speed selection, regardless of thermal station conditions. If the fan is controlled in Auto fan mode and the control is not in the demand phase, the fan is permanently activated at Low speed.

- **External contact:** A high voltage input signal for external contact is present. If the external contact is activated, device behaviour depends on its configuration on site:
  - Presence detection (empty room with hotel door card), Energy saving mode is activated, internal temperature is raised by 4 °C in cooling mode and reduced by 4 °C in heating mode.
  - Window Contact: During OFF mode (window open), all outputs are disconnected (fan, valves, etc.) and only the frost protection function is active if it has been enabled by its corresponding dip-switch.
- **Master/Slave control:**
  - Thermostat type A_AC and B_AC: the Control Board for grouping accessory (42N9006) is allowing fan speed relay only (water valves have to be wired/relayed separately) up to 300 units with control on Air temperature (no water valve), or 10 units 2 pipe with water control, or 5 units 4 pipe with water control
  - Thermostat type C_EC and D_EC: The Thermostat EC motor version can control up to 10 LEC units by wiring in parallel the analogue 0-10 two-wires output signal (water valves have to be wired/relayed separately).

NTC controller

- This is a communicating PID controller, combining energy saving algorithms and full control function solutions, compatible with the Aquasmart Evolution system package.
- The NTC controller can manage the EC motor option, and combines energy savings with optimised comfort.

WTC Controller

- Open Communication protocol BACnet or LON
- Communication PID controller
- Large range of user interfaces wall mounted or remote
- Manage the motorized louvers of the grill in manual or automatic
- Manage the EC motor to optimise the comfort
- Manage a CO_2 sensor to improve Air Quality
- Optional Light and/or Blinds management modules from same user interface
- Large range of sensors (light, presence, etc.)

Valve options

- Valve body: both the two-way or four-way (three-way with integrated bypass) valve options are factory-fitted and tested. The chilled-water valves are fully insulated within a moulded insulating shell, preventing condensation on the valve body. This new shell reduces the complexity of the offer and prevents water leakage risk. Valves are factory-fitted on the unit side.

Moulded valve insulating shell

- Valve actuators: a wide choice of actuators is available with two or four-way valve bodies to offer the right solution for any controller type and customer requirement, from on/off to proportional types, with either 230 V or 24 V power supply:
  - On/off 230 V actuator
  - On/off 24 V actuator
  - Floating 3-point 230 V actuator
  - Floating 3-point 24 V actuator
- When combined with LEC motors and the NTC controller, floating three-point 230-V actuators are recommended to increase energy savings and enhance comfort.

Auxiliary drain pan

- An auxiliary drain pan is available as an accessory if the water valves, stop valves or balancing valves are customer-supplied. The auxiliary drain pan is not required with Carrier factory-fitted water valves, as they are factory-supplied with the valve body insulated (moulded insulating shell) to prevent condensation.

Auxiliary drain pan for compact 42GW_S/E 200/209, 300/309, 400/409 units

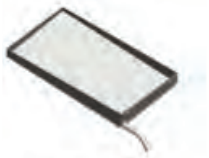

Auxiliary drain pan for large 42GW_S/E 500/509, 600/609, 701/709 units

Electric heater option

- Electric heater option is available only with 2-pipe coil versions. One heating capacity is available per Idrofan cassette size, factory-fitted to ensure safe and reliable operation.

Fresh air inlet option

- All units have connections for fresh air ducts that can considerably improve indoor air quality while fresh air volume is managed by the CO_2 sensor through NTC control.
- The fresh air flow must be less than 10% of the total air flow, to avoid operating problems and excessive noise. For higher air flow a primary air kit is available that uses the pre-punched hole for air ducting to an adjacent room and a baffle so that the fresh air is introduced into the room through a diffuser.

Supply of conditioned air duct to an adjacent room

- This option allows supply of conditioned air to a room located close to the Idrofan cassette through an air duct (customer-supplied). If this option is used, the outlet corresponding to the duct must be closed, using the air supply outlet obstruction kit provided. The kit cannot be used in units equipped with electric heater. An air inlet grille must be fitted (if possible near the floor) between the air-conditioned room (where the unit is situated) and the adjacent room or, alternatively, the door must be undercut.
- The duct lengths can be calculated in accordance with the "air distribution to an adjacent room" diagram in the IOM, also taking into account the pressure drop through air diffusers and fresh air filters.

Serviceability

- All the key components (motors, fans and drain pump) are accessible from the bottom by simply removing the grille. These components can be removed without disturbing the other components or any surrounding ceiling tiles.

Operating limits

Water circuit	Maximum water-side pressure: 1400 kPa (142 m WG)	Minimum entering water temperature: 5°C Maximum entering water temperature: 80°C
Indoor temperature		Minimum temperature: 5°C Maximum temperature: 32°C for units with electric heaters
Power supply	Nominal operating limits	230 V - 1 ph - 50 Hz Min.207 - Max.253 V for units without electric heaters Min.216 - Max.244 V for units with electric heaters

Air throw, m

42GW	Louvres all open			One louvre closed			Two louvres closed		
	High speed	Medium speed	Low speed	High speed	Medium speed	Low speed	High speed	Medium speed	Low speed
200/209	3.8	3.2	2.7	4.3	3.7	3.0	4.8	4.1	3.4
300/309	4.0	3.4	2.8	4.5	3.8	3.2	5.0	4.3	3.5
400/409	4.8	4.1	3.4	5.3	4.5	3.7	5.8	4.9	4.1
500/509	3.0	2.6	2.1	3.5	3.0	2.5	4.0	3.4	2.8
600/609	3.4	2.9	2.4	3.9	3.3	2.7	4.4	3.7	3.1
701/709	4.3	3.7	3.0	4.8	4.1	3.4	5.3	4.5	3.7

Notes:
1. The louvres were adjusted to use the Coanda effect to obtain an air flow pattern that adheres as closely as possible and parallel to the ceiling.
2. The air throw is defined as the distance at which air flow speed falls to 0.2 m/s, when the air flow leaves the unit parallel to the ceiling.
3. The values are to be considered as indicative, as they may vary according to the type of ceiling, room dimensions and even the furniture used.

Valve kit

Valve kit	42GW 9029	42GW 9031	42GW 9030	42GW 9032	42GW 9033	42GW 9035	42GW 9034	42GW 9036
Unit option (10th digit)	H - 4 ways	H - 4 ways	H - 4 ways	H - 4 ways	G - 2 ways	G - 2 ways	G - 2 ways	G - 2 ways
Description	3/4" cold	1" cold	3/4" cold + 1/2" hot	1" cold + 3/4" hot	3/4" cold	1" cold	3/4" cold + 1/2" hot	1" cold + 3/4" hot
Valve pitch, mm	40	73	40/40	73/40	40	73	40/40	73/40
Valve face	Flat	Flat	Flat	Flat	Flat	Flat	Flat	Flat
2 pipes								
200C, 300C, 400C	X	-	-	-	X	-	-	-
209C, 309C, 409C	X	-	-	-	X	-	-	-
500C, 600C, 701C	-	X	-	-	-	X	-	-
509C, 609C, 709C	-	X	-	-	-	X	-	-
4 pipes								
200D, 300D, 400D	-	-	X	-	-	-	X	-
209D, 309D, 409D	-	-	X	-	-	-	X	-
600D, 701D	-	-	-	X	-	-	-	X
609D, 709D	-	-	-	X	-	-	-	X

Coil pressure drops

Two-pipe units, cooling

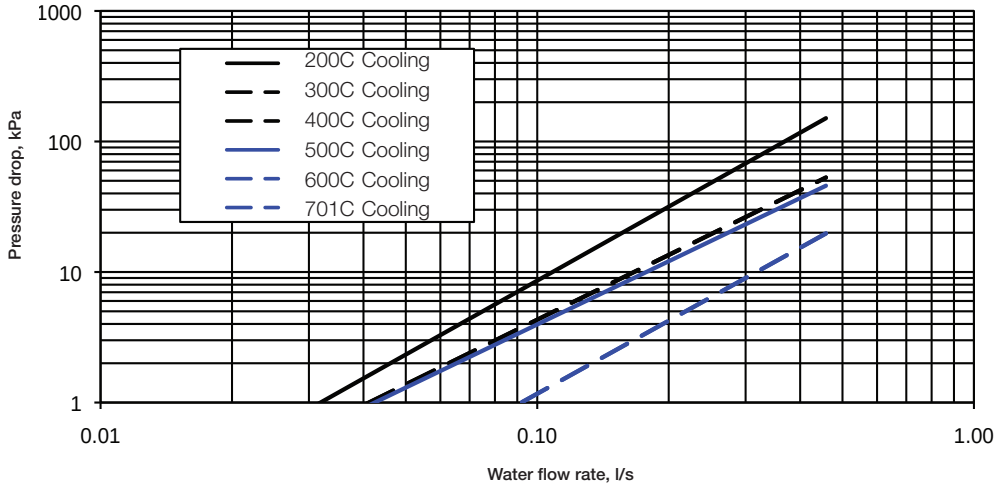

Two-pipe units, heating

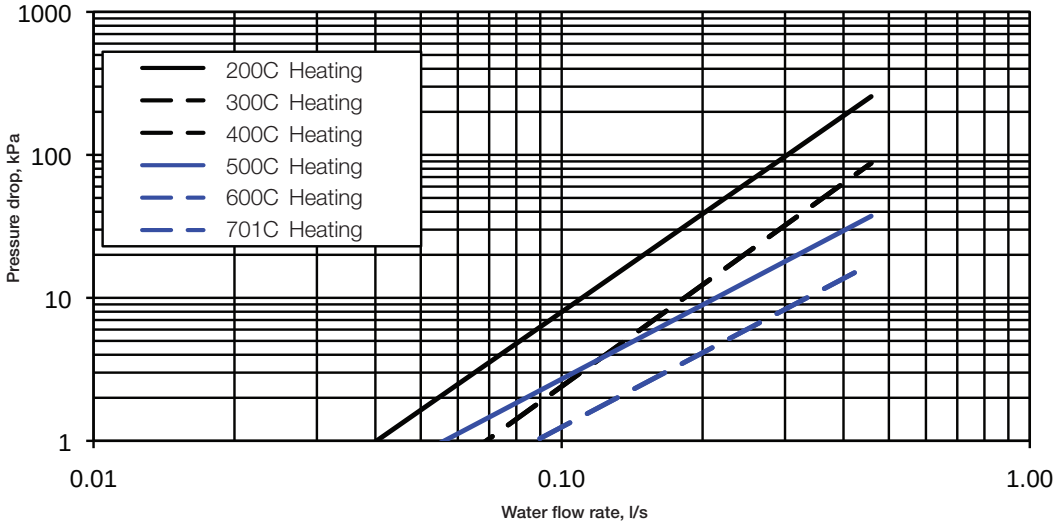

Four-pipe units, cooling

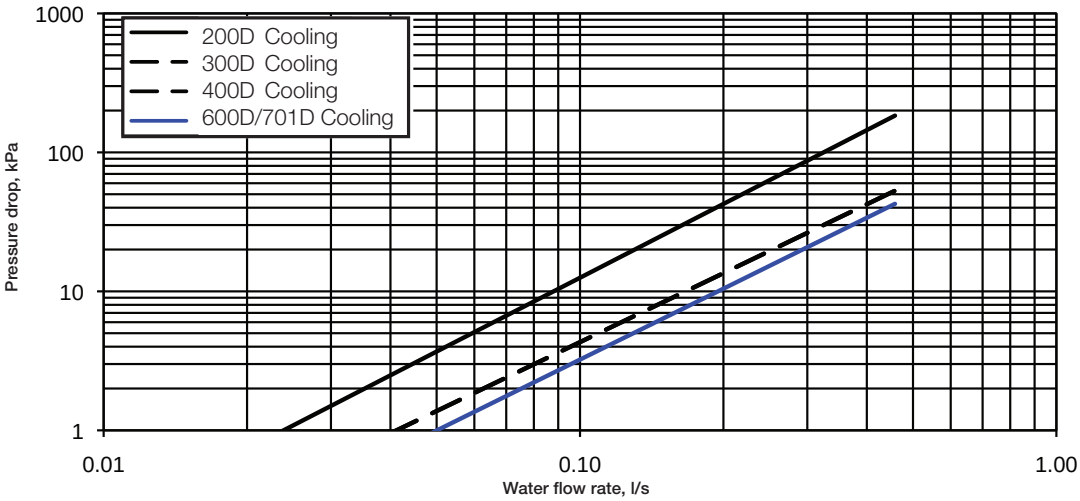

Four-pipe units, heating

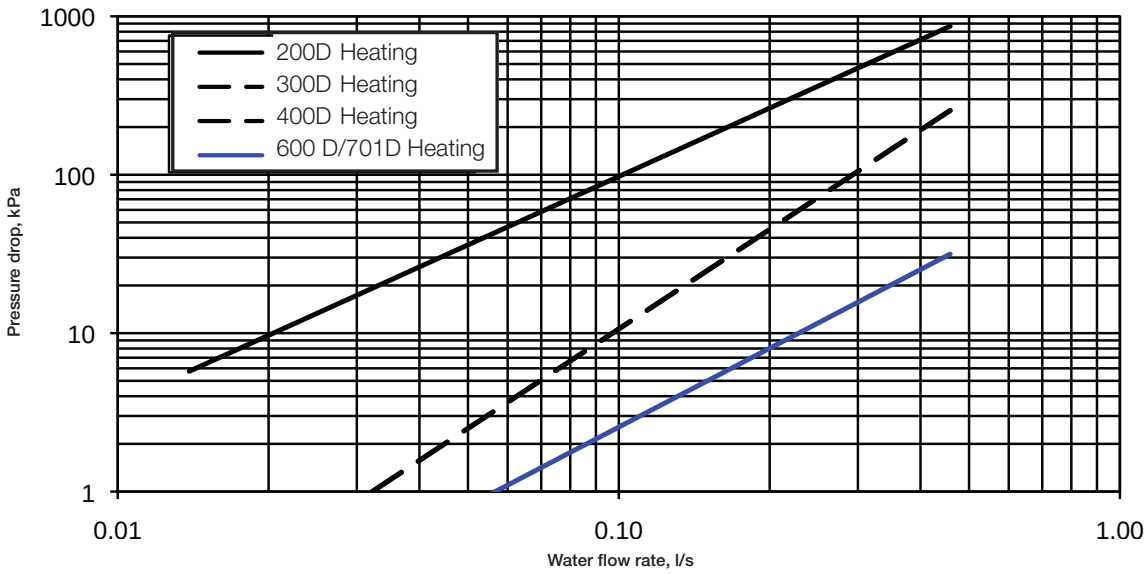

2-way valve pressure drop

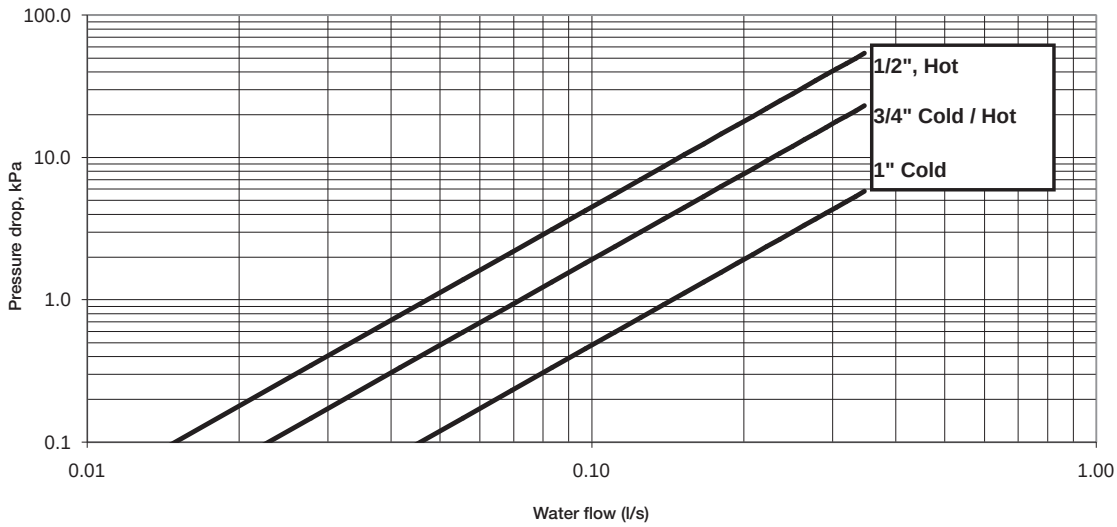

3-way valve pressure drop

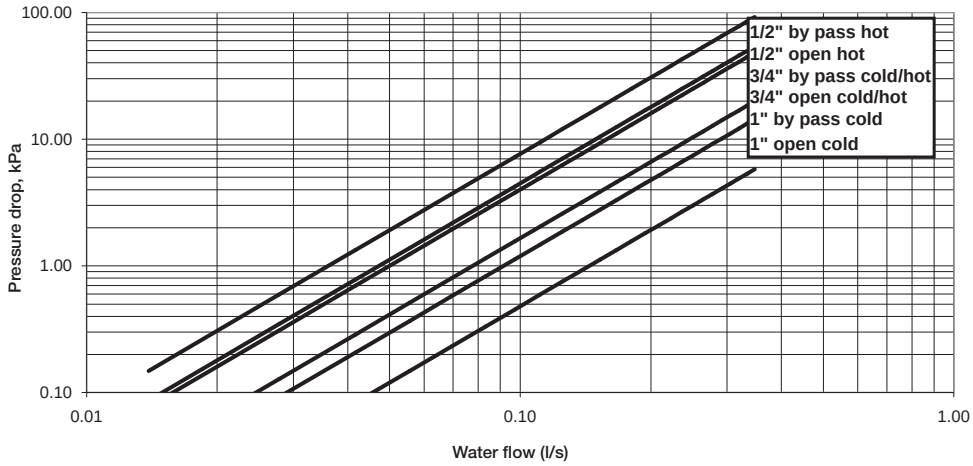

Dimensions/clearances

42GW 200/209 - 300/309 - 400/409 (compact chassis)

Unit without valves

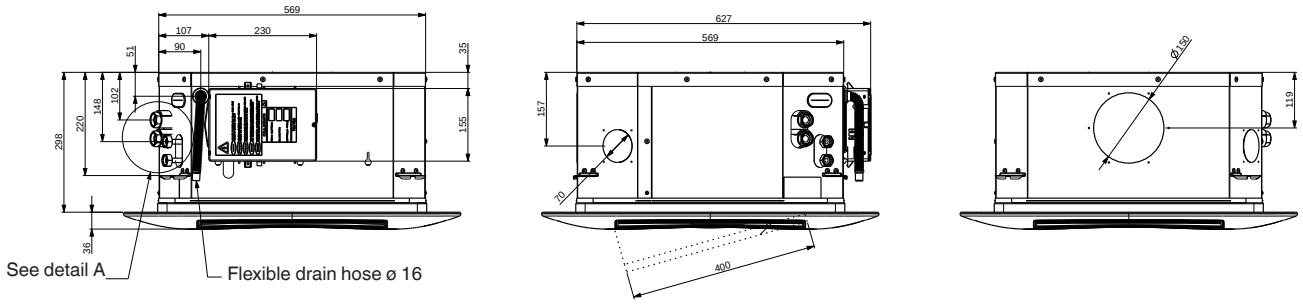

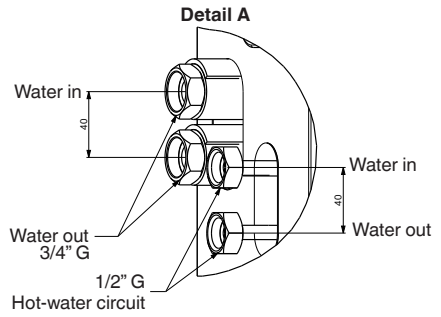

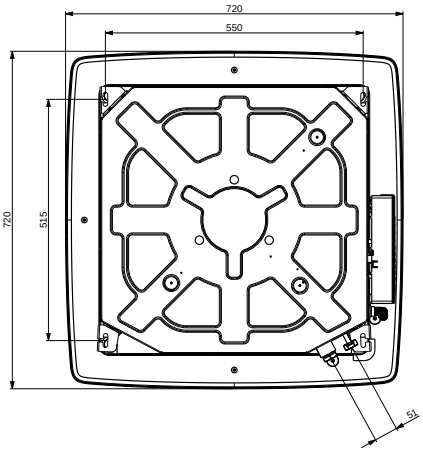

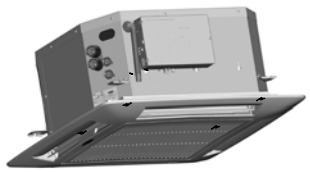

Unit with two-way valves

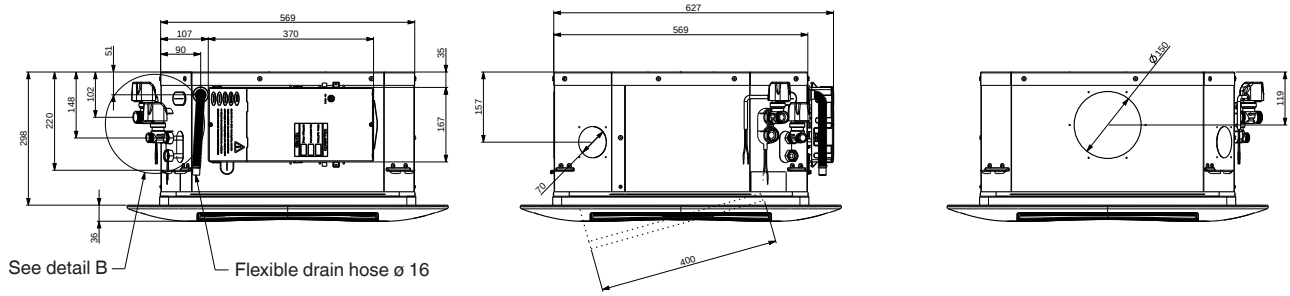

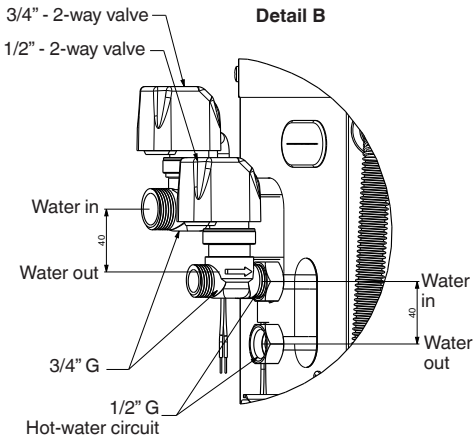

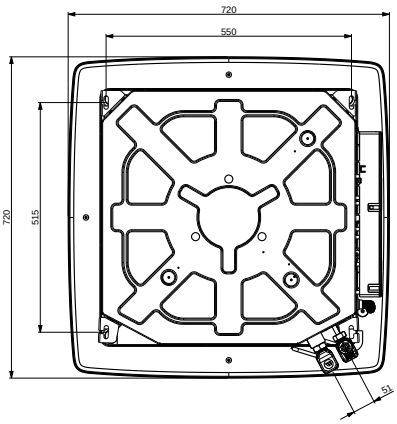

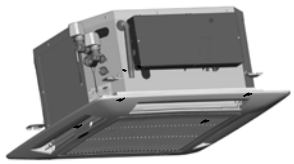

42GW 200/209 - 300/309 - 400/409 (compact chassis)

Unit with four-way valves

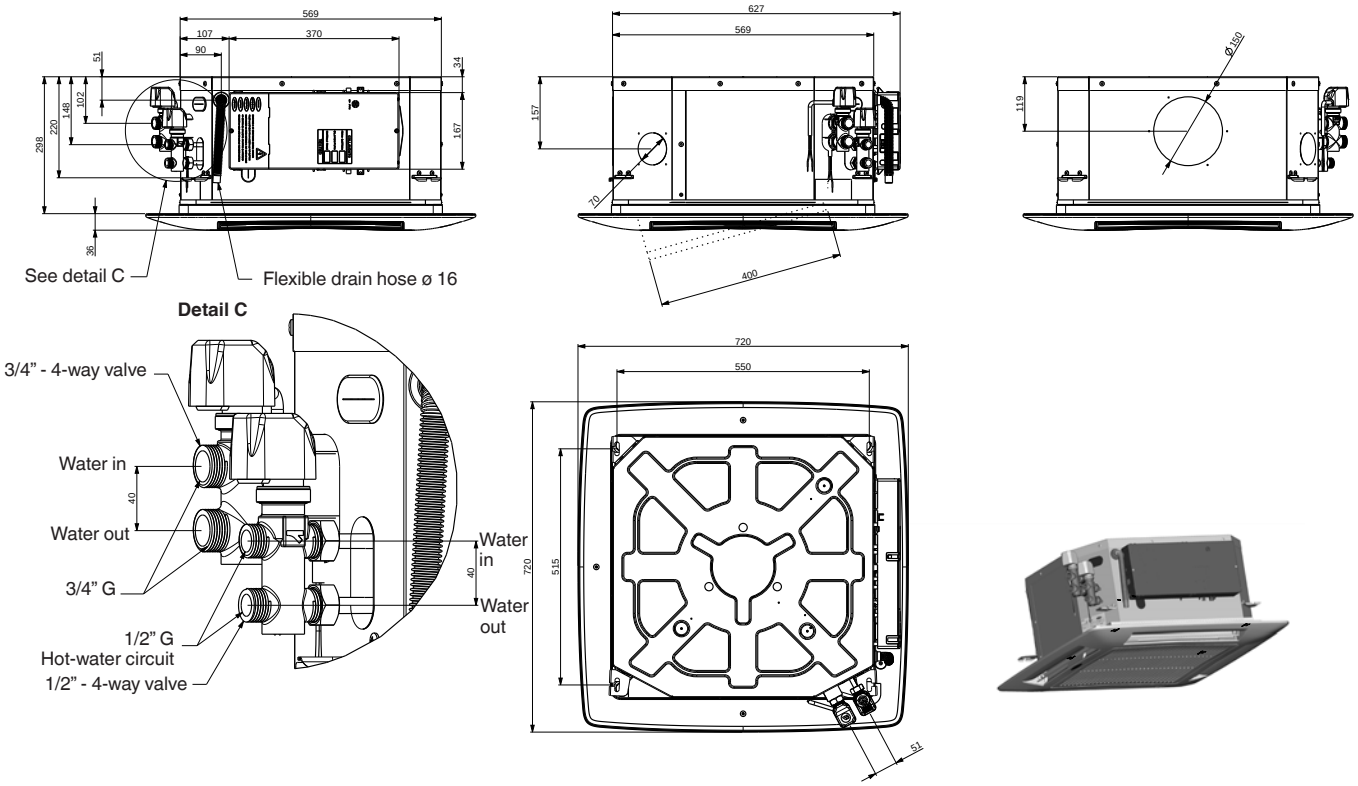

42GW 500/509 - 600/609 - 701/709 (large chassis)

Unit without valves

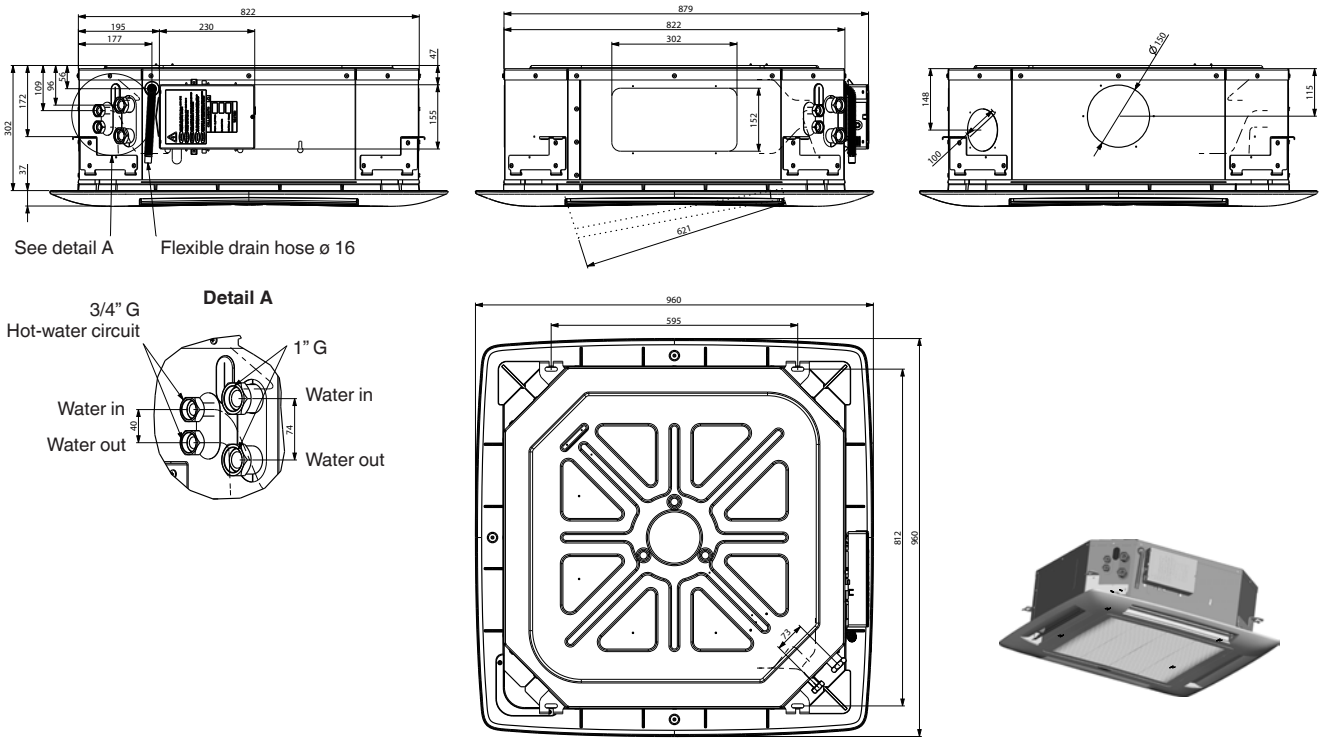

42GW 500/509 - 600/609 - 701/709 (large chassis)

Unit with two-way valves

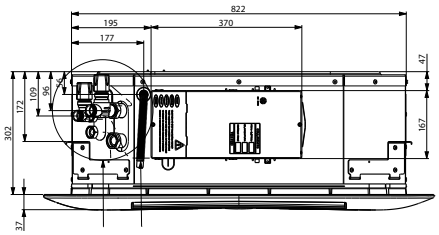

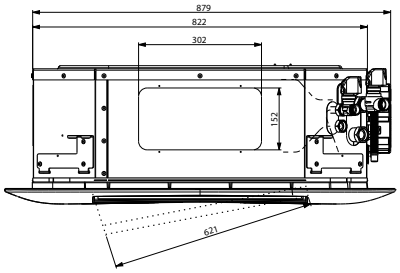

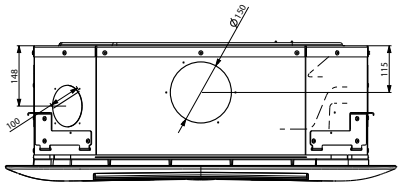

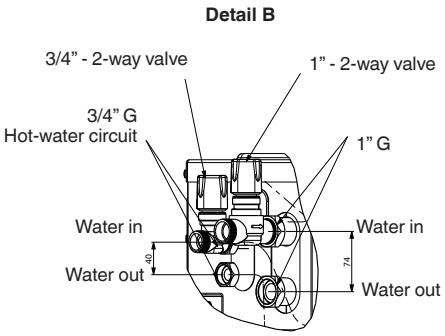

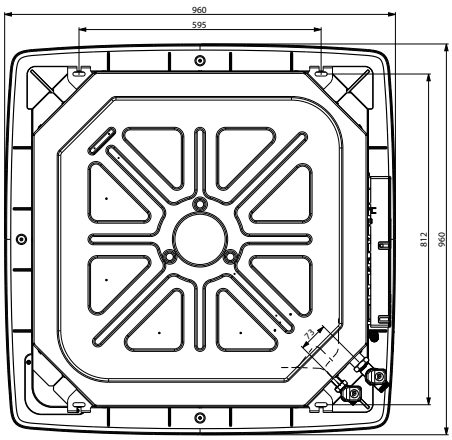

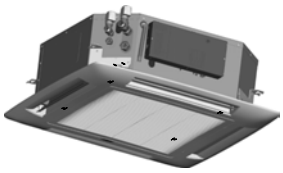

Unit with four-way valves

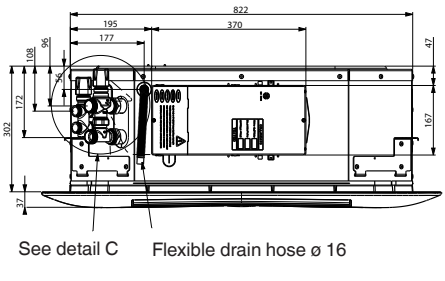

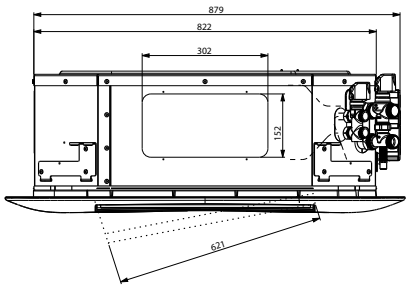

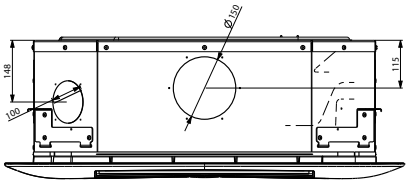

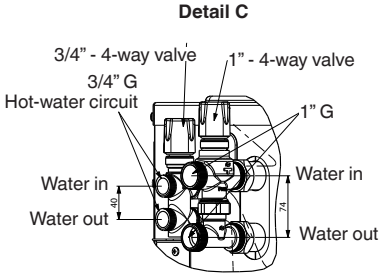

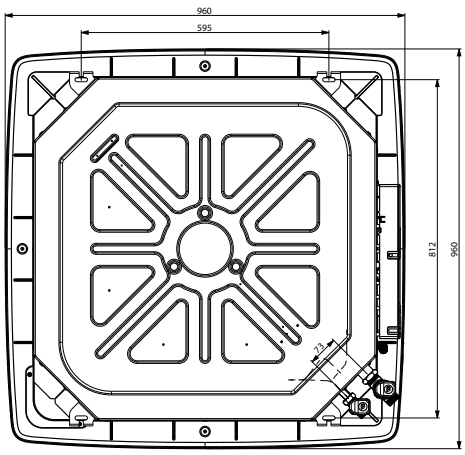

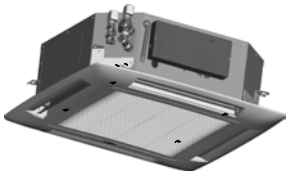

42KY

NEW

Optimised Coanda Effect diffusion

Indoor comfort

Air quality

Responsiveness of the system and individual adjustment

Low energy consumption

Acoustic comfort

Design

Ease of maintenance

Energy performance, comfort and indoor air quality: Carrier's new 42KY cassette is the all-in-one solution to meet heating and cooling requirements for commercial buildings and provide optimum comfort for users.

The 42KY one-way cassette range includes 3 models that cover a flow rate of 250 to 770 m^3/h which meet the most stringent of noise level requirements.

The 42KY is available as:

- 2 tube system, hot or cold operation.
- 2 tube + 2 wire system, cold + hot / cold + electrical operation. 4 tube system, cold and hot operation.

EUROVENT CERTIFIED PERFORMANCE
www.eurovent-certification.com

Physical Data

42KY Unit performance

2Tubes

42KY		10C			19C			20C		
Speed		HS	MS	LS	HS	MS	LS	HS	MS	LS
Voltage	V	-	-	-	4.9	3.9	2.5	-	-	-
Input Power	W	45	41	34	17	8	5	45	41	34
Air Flow Rate	m³/h	440	375	230	440	305	230	420	355	215
Heating Capacity										
	W	2410	2180	1640	2420	1930	1650	3270	2860	1930
Pressure drop	kPa	9	8	5	9	6	5	16	13	7
Cooling Capacity										
Total	W	1740	1570	1220	1720	1380	1190	2640	2320	1610
Sensible	W	1590	1430	1060	1570	1230	1040	2070	1790	1180
Pressure drop	kPa	11	9	6	11	7	5	19	15	8
Lw	dB(A)	49	46	37	49	42	37	51	47	35
LP	dB(A)	37	34	25	37	30	25	39	35	23
NR		32	29	19	32	25	19	34	30	18
Eurovent FCEER	Class	F			A			E		
Eurovent FCCOP	Class	F			A			E		

42KY		29C			30C			39C		
Speed		HS	MS	LS	HS	MS	LS	HS	MS	LS
Voltage	V	4.9	4.2	2.5	-	-	-	6.7	5.3	3
Input Power	W	17	12	5	77	56	40	38	21	6
Air Flow Rate	m³/h	420	355	215	655	520	405	655	520	290
Heating Capacity										
	W	3290	2880	1960	5070	4090	3240	5100	4120	2500
Pressure drop	kPa	16	13	6	25	17	12	25	17	7
Cooling Capacity										
Total	W	2610	2290	1580	4420	3600	2880	4390	3560	2220
Sensible	W	2040	1770	1150	3340	2680	2110	3310	2650	1580
Pressure drop	kPa	18	15	7	30	20	13	29	20	9
Lw	dB(A)	51	47	35	58	51	45	58	51	40
LP	dB(A)	39	35	23	46	39	33	46	39	28
NR		34	30	18	40	34	27	40	34	21
Eurovent FCEER	Class	A			D			A		
Eurovent FCCOP	Class	A			D			A		

EUROVENT conditions
Cooling mode: (2 tubes): Air inlet temperature: 27°C/19°CBH, Water inlet/outlet temperature: 7°C/12°C
Heating mode: (2 tubes): Air inlet Temperature: 20°C, water inlet temperature: 50°C, water flow rate identical to cold mode
The sound pressure levels and NR levels are based on hypothetical attenuation of the room of -12dB(A).

Physical Data

«Cold shower» system

The one-way 180° diffuser is fitted with an «anti cold shower» system that maximises comfort by preventing cold air from falling between two cassettes.

The system incorporates two deflectors in the insulation which offsets the air stream slightly in the lateral axis. When the units are placed side by side in the same room, the air flows do not oppose one another and cross over in parallel, which avoids any cold air draughts.

This patented system removes the discomfort caused by draughts without having to reduce the outlets and with no increased noise levels, while maintaining the air flow necessary for the thermal requirements.

With anti «cold shower» system

Without anti «cold shower» system

42KY Unit performance

4Tubes

42KY		20D			29D			30D			39D		
Speed		HS	MS	LS	HS	MS	LS	HS	MS	LS	HS	MS	LS
Voltage	V	-	-	-	4.9	4.2	2.5	-	-	-	5.3	4.6	3
Input Power	W	45	41	34	17	12	5	77	56	40	21	15	6
Air Flow Rate	m³/h	420	355	215	420	355	215	655	520	405	520	455	290
Heating Capacity													
	W	2820	2580	2020	2830	2600	2040	3460	3000	2600	2820	2610	2110
Pressure drop	kPa	21	18	12	21	18	12	28	22	17	25	22	15
Cooling Capacity													
Total	W	2090	1910	1450	2060	1880	1420	3790	3140	2570	2910	2620	1920
Sensible	W	1840	1620	1120	1810	1600	1090	3040	2470	1980	2280	2020	1410
Pressure drop	kPa	10	8	5	10	8	5	19	13	9	13	11	6
Lw	dB(A)	51	47	35	51	47	35	58	51	45	51	48	40
LP	dB(A)	39	35	23	39	35	23	46	39	33	39	36	28
NR		34	30	18	34	30	18	40	34	27	34	30	21
Eurovent FCEER	Class	E			A			D			A		
Eurovent FCCOP	Class	E			A			E			B		

EUROVENT conditions
Cooling mode: (4 tubes): Air inlet temperature: 27°C/19°CBH, Water inlet/outlet temperature: 7°C/12°C
Heating mode: (4 tubes): Inlet temperature: 20°C, water inlet/outlet temperature: 70°C/60°C
The sound pressure levels and NR levels are based on hypothetical attenuation of the room of -12dB(A).

Features and advantages

Energy performance, comfort and indoor air quality: Carrier's new 42KY cassette is the all-in-one solution to meet heating and cooling requirements for commercial buildings and provide optimum comfort for users.

Low consumption (LEC) variable speed active comfort unit making it possible to adapt the indoor temperature automatically and independently to the preferences of occupants with very quick response times.

Coanda Effect diffusion, optimised according to the standard NF EN ISO 7730, ensures perfect control of thermal phenomena that can cause discomfort. Carrier's new 42KY cassette makes it possible to eliminate draughts that are felt with sweeping diffusion systems or direct airflow onto the occupant.

Eco-designed product that is 90% recyclable. The 42KY cassette has been developed to limit its impact on the environment throughout its life cycle.

The air treatment unit is fitted within the suspended ceiling, at the edge of the room, with the outlet facing the windows. It has all the economical advantages that come from installing and operating a central heated and chilled water production unit. The location facilitates hydraulic connection via the suspended ceiling of the adjoining corridor, and gravity draining of condensate (no pump).

Operating logic

The centrifugal turbine draws air through a perforated metal intake grille. The air is filtered, then heated or cooled through a temperature exchange coil fed with either hot or chilled water. The air is then pulsed horizontally at 180°, by means of the Coanda Effect in the room to be treated.

The Coanda effect

One-way Coanda Effect diffuser:

The single slot peripheral outlet with its narrow opening and specific internal profile will increase the initial speed of the air as it leaves the diffuser. The high speed of the moving flow of air causes an area of low pressure which keeps it close to the ceiling, (there is no direct blast on occupants) and the ambient air is drawn in by induction to be reinjected in the air stream. The air mix rate, the range and the coverage of the air flow are improved, which reduces thermal phenomena that cause discomfort in the occupied area (residual air flow rate, asymmetric temperatures, radiation caused by walls, etc.).

Fresh air inlet spigot

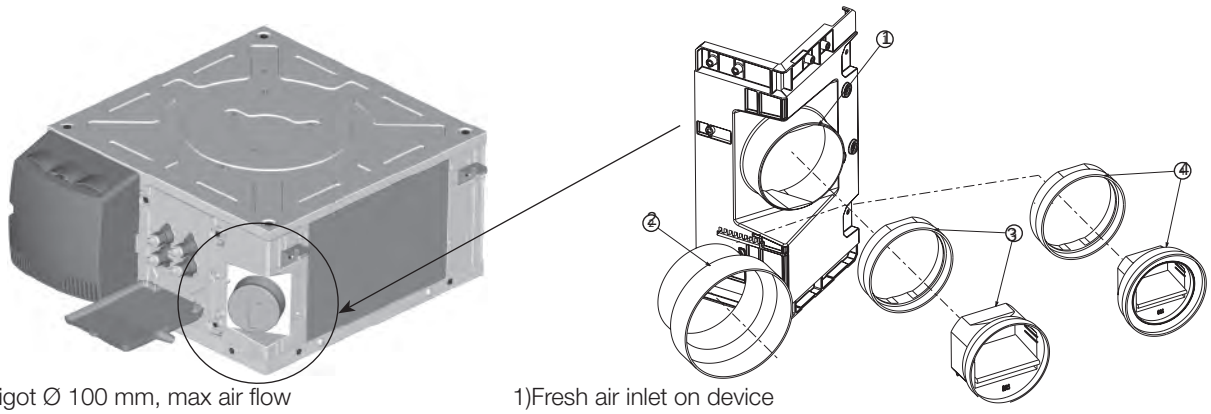

Spigot Ø 100 mm, max air flow 90 m³/h recommended. Network balancing system not supplied by Carrier.

1)Fresh air inlet on device
2)Ø100 / Ø125 mm adapter
3)Air flow controller 60/75/90 m³/h
4)Air flow controller 15/30/45 m³/h

Advantages

- The use of a heat transfer fluid is an ecological and durable solution.
- Individual adjustment of the indoor temperature.
- Responsive system.
- Large power range.
- Coanda Effect diffusion over 180° for even coverage and perfect control of thermal phenomena that can cause discomfort. Acoustic comfort.
- LEC low consumption motor. G3 filter.
- Optimised water coil.
- Condensate drain by gravity avoiding the need for a drain pump.
- Modern and elegant design for perfect integration.
- Environmentally responsible product. Ease of maintenance.

Greater comfort

Optimised Coanda Effect diffusion for perfect control of thermal phenomena that can cause discomfort and make the room feel draughty.

Compliance with energy requirements

Specially developed temperature exchange coils to meet the requirements of low energy buildings.

Optimised temperature exchange coils to limit cost and consumption in comparison with the other components of the installation. LEC low consumption motor.

Reduction in power of the electric heating coils to match the requirements of new buildings.

Eco design

Raw materials

30% saving in weight and 21% saving in volume thanks to a compact and well thought out architecture. Use of easily recyclable materials (EPS and ABS).

Transport

Raw material suppliers selected from those that are less than 100 km from our manufacturing and packaging factory, enabling a 50% gain in volumes transported (reduction in CO_2 emissions).

Recycling and ease of disassembly

90% recyclable products.

Materials can be completely separated and fixings have been reduced by 40% to allow greater efficiency at recycling plants.

Innovative design

Next generation chassis that combines high density EPS for its thermal and phonic properties, ABS PC and a ribbed galvanised sheet steel base to stiffen the assembly.

Chassis with unique dimensions for all sizes, adapted to the suspended ceiling grid size 600 x 600 mm.

Hydraulic, air and electrical connections on the same side to facilitate installation and access for maintenance operations. Fresh air inlet with 100 mm sleeve integrated to the chassis with removable plug.

Technical features

Coil capacity (L)

42KY cassette		10/19	20/29	30/39
2 tube coil		0.4	0.8	1.1
2 tube coil + electric		-	0.6	1
4 tube coil	cooling	-	0.6	1
	Heating	-	0.2	0.2

Coil connection diameters

Coil connection type: flush fit female threaded union nuts
Valve connection type: install flush fit male threaded unions

42KY cassette		10/19	20/29	30/39
2 tube coil		G 1/2"	G 1/2"	G 1/2"
2 tube coil + electric		-	G 1/2"	G 1/2"
4 tube coil	cooling	-	G 1/2"	G 1/2"
	Heating	-	G 1/2"	G 1/2"

Technical features

Electrical specifications of the motors

42KY		Motor information	AC asynchronous motor			LEC motor		
			10	20	30	19	29	39
Input power	W	V5	70	70	101	38	38	56
		V4	45	45	77	17	17	38
		V3	41	41	56	12	12	21
		V2	38	38	47	8	8	15
		V1	34	34	40	5	5	11
Input amps	A	V5	0,30	0,30	0,32	0,18	0,18	0,40
		V4	0,21	0,21	0,29	0,09	0,09	0,28
		V3	0,19	0,19	0,24	0,07	0,07	0,17
		V2	0,18	0,18	0,22	0,04	0,04	0,13
		V1	0,17	0,17	0,21	0,02	0,02	0,10

Motor operating range: Min recovery T°C: +5°C
Max recovery T°C: 40°C

Electrical heater specifications - Input voltage 230V - 1 ph - 50Hz

42KY cassette		10/19	20/29	30/39
Electrical power	W	-	900	1200
Input amps	A	-	3.6	4.8

Options (Factory Assembled)

Name
Condensate drain pump
Lift kit
Frame for 675 x 675 suspended ceiling tiles
Finishing trim frame for STAFF ceilings.
Water coil with protected fins

Accessories (Available separately)

Name	
Condensate drain pump kit	
Elastic dampers (4 per device)	
Lift kit	
Self adjusting module diameter 100 mm	15/30/45 m³/h
	60/75/90 m³/h
AN adapter kit Diameter 100/125 mm	
Frame kit for suspended ceiling 675x675	
LEC motor speed control 3 speed ON/OFF unit kit (only for thermostat or controllers not from CARRIER that have 3 230V speed outputs)	

Limitations of use

42KY cassette	**Operating pressure max. 16 Bar**	Minimum water inlet temperature: 6°C
		Maximum water inlet temperature:
		4 Tubes: 80°C
		2 Tubes: 70°c
		2 Tubes + electric: 55°C (min air flow 200m³/h)
Indoor temperature	-	Minimum temperature: 5°C
	-	Maximum temperature: 40°C
Electrical supply	**Nominal usage limitations**	Min 207 - Max 253 V for units without electrical heater
		Min 216 - Max 244 V for units with electrical heater

Dimensions

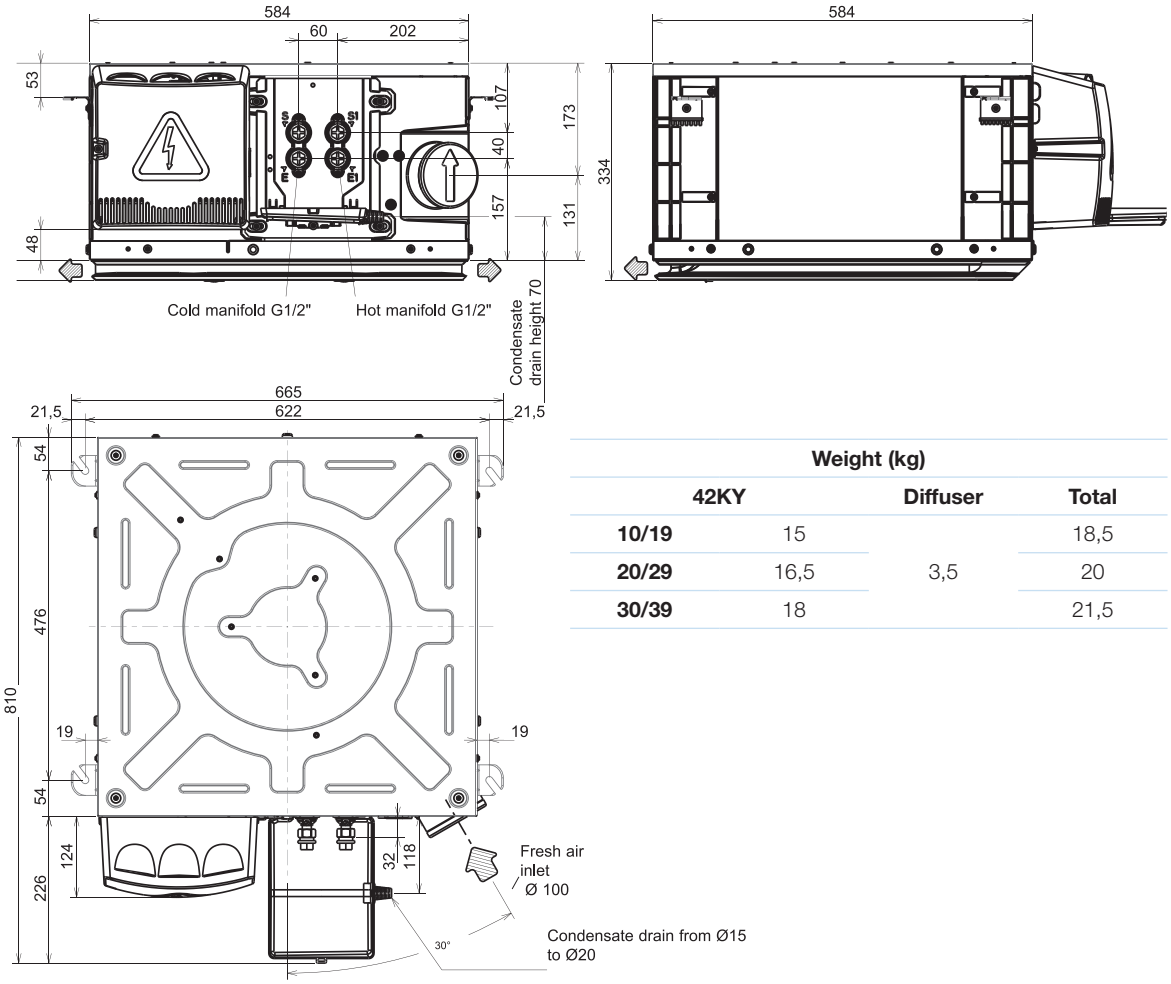

Weight (kg)			
	42KY	Diffuser	Total
10/19	15		18,5
20/29	16,5	3,5	20
30/39	18		21,5

Pipe and valve positioning

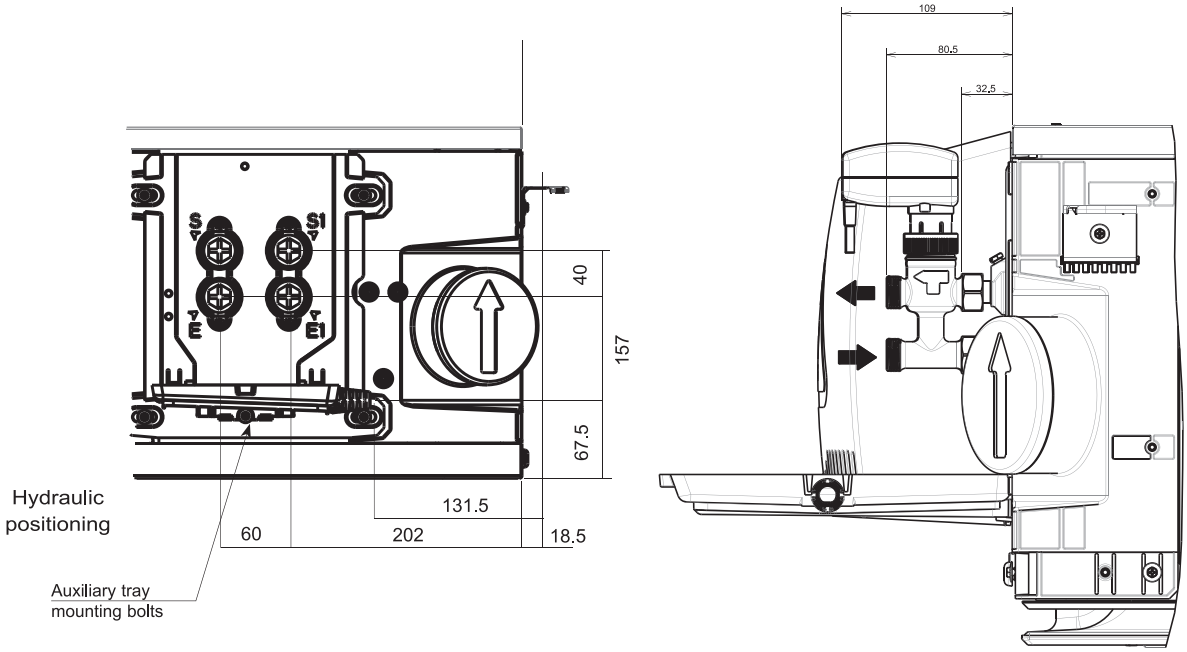

42N

Nominal cooling capacity 1.5-8.7 kW
Nominal heating capacity 1.3-11.6 kW

IDROFAN

Extremely quiet operation

Low energy consumption

Simpified installation & large options choice

Self regulated PTC electrical heater

Discreet & elegant consoler

The 42N_S and 42N_E product ranges combine aesthetic and attractive design with versatility to satisfy any application need, from large office buildings or hotels to shops and residential applications.

This product series is characterised by concentrated, innovative technology, unusual for a fan coil. The result is a product that is easy to select and install.

The 42N_S is available with a new-generation three- or five-speed AC motor. The 42N_E is available with a variable-speed low energy consumption EC motor.

The range now includes eleven sizes, with air flows from 35 to 422 l/s (126 to 1520 m^3/h). The Idrofan offers an ultra-low-noise option for applications where a low noise level is the most important selection parameter.

The Idrofan is available with two types of fans, a tangential fan for the smallest sizes and a centrifugal fan for all other sizes.

Physical and electrical data

Two-pipe coil

42N_S, 2-pipe coil		S15					S20					S26		
Fan speed		**R1**	**R2**	**R3**	**R4**	**R5**	**R1**	**R2**	**R3**	**R4**	**R5**	**R1**	**R2**	**R3**
Fan type		One, tangential					One, centrifugal					One, centrifugal		
Air flow	l/s	96	82	69	55	34	126	106	91	79	59	189	148	93
	m^3/h	345	296	247	198	123	453	382	327	283	214	681	534	334
Cooling mode*														
Total cooling capacity	kW	1.2	1,09	0,97	0,83	0,58	2,13	2,01	1,78	1,54	1,15	3,52	2,98	2,09
Sensible cooling capacity	kW	1,1	1,01	0,89	0,74	0,5	1,77	1,62	1,42	1,23	0,93	2,84	2,35	1,6
Water flow rate	l/s	0,06	0,05	0,05	0,04	0,03	0,1	0,09	0,09	0,07	0,06	0,17	0,14	0,1
	l/h	210	190	170	140	100	370	340	310	260	200	600	510	360
	m^3/h	0,21	0,19	0,17	0,14	0,1	0,37	0,34	0,31	0,26	0,2	0,6	0,51	0,36
Water pressure drop	kPa	12	10	8	6	3	5	5	4	3	2	12	9	5
Heating mode**														
Heating capacity	kW	1,87	1,74	1,48	1,29	0,88	3,01	2,72	2,36	2,05	1,59	4,28	3,68	2,56
Water pressure drop	kPa	10	8	7	5	3	4	4	3	2	1	10	8	4
Water content	l	0.6					1.4					1.4		
Sound levels														
Sound power level	dB(A)	52	47	43	37	29	52	46	43	37	32	61	54	44
Sound pressure level***	dB(A)	43	38	34	28	20	43	37	34	28	23	52	45	35
NR value		39	34	29	23	16	36	32	29	22	15	47	40	31
Electrical data														
Power input	W	30	23	19	17	16	36	34	31	30	29	45	55	65
Current drawn	A	0.13	0.11	0.09	0.08	0.08	0.16	0.15	0.14	0.13	0.12	0.3	0.25	0.2
Electric heater														
High capacity	W	800					1000					1000		
Current drawn	A	3.48					4.35					4.35		
High capacity	W	500					500					500		
Current drawn	A	2.18					2.18					2.18		
Eurovent energy class FCEER/FCCOP		E/E					E/E					E/E		
Connection diameter	in	3/4 gas					3/4 gas					3/4 gas		

* Eurovent conditions: Entering air temperature = 27°C db/19°C wb – entering/leaving water temperature = 7°C/12°C, high fan speed.
** Eurovent conditions: Entering air temperature = 20°C, entering water temperature = 50°C, same water flow rate as in cooling mode.
*** Based on a hypothetical acoustic attenuation for the room and the air distribution system of -9 dB(A).
† This unit complies with all applicable standards for EC marking (for further details see Declaration of Conformity). Except the unit size 42N_S65 which is not CE labeled due to fan efficiency regulation 327/2011 but is fully compliant with Machinery (2006/42/EC) and Electromagnetic Compatibility (2004/108/EC) directives.

Physical and electrical data

Two-pipe coil

42N_, 2-pipe coil		S30					S42			S45					S65†		
Fan speed		**R1**	**R2**	**R3**	**R4**	**R5**	**R1**	**R2**	**R3**	**R1**	**R2**	**R3**	**R4**	**R5**	**R1**	**R2**	**R3**
Fan type		Two, centrifugal					Two, centrifugal			Two, centrifugal					Two, centrifugal		
Air flow	l/s	205	181	152	126	97	267	221	147	332	275	224	184	146	420	330	236
	m^3/h	739	651	547	454	349	960	795	530	1195	991	805	663	524	1511	1187	851
Cooling mode*																	
Total cooling capacity	kW	3,68	3,34	2,91	2,45	1,92	4,44	3,93	3	5,32	4,76	3,94	3,25	2,58	6,24	5,4	3,85
Sensible cooling capacity	kW	3,04	2,73	2,35	1,97	1,4	3,64	3,17	2,33	4,58	4	3,3	2,73	2,1	5,15	4,5	3,2
Water flow rate	l/s	0,18	0,16	0,14	0,12	0,09	0,21	0,19	0,14	0,25	0,23	0,19	0,16	0,12	0,3	0,26	0,18
	l/h	630	570	500	420	330	760	670	510	910	820	680	560	440	1070	930	660
	m^3/h	0,63	0,57	0,5	0,42	0,33	0,76	0,67	0,51	0,91	0,82	0,68	0,56	0,44	1,07	0,93	0,66
Water pressure drop	kPa	16	14	11	8	5	22	18	11	11	9	7	4	3	14	11	6
Heating mode**																	
Heating capacity	kW	4,77	4,33	3,78	3,25	2,62	6,4	5,57	4,07	8,04	7	5,84	4,9	3,96	9,5	8,03	6,08
Water pressure drop	kPa	13	11	8	6	4	18	14	9	9	7	5	4	3	12	9	5
Water content	l	1.8					1.8			2.1					2.1		
Sound levels																	
Sound power level	dB(A)	56	51	47	42	36	62	57	47	62	57	55	47	41	68	62	54
Sound pressure level***	dB(A)	47	42	38	33	27	53	48	38	53	48	46	38	32	59	53	45
NR value		41	37	33	28	22	48	43	34	48	43	41	34	28	54	49	40
Electrical data																	
Power input	W	57	50	46	44	42	100	75	45	129	92	83	77	69	165	125	90
Current drawn	A	0.25	0.23	0.21	0.2	0.19	0.45	0.35	0.21	0.55	0.4	0.37	0.34	0.31	0.7	0.6	0.4
Electric heater																	
High capacity	W	2000					2000			2000					2000		
Current drawn	A	8.7					8.7			8.7					8.7		
High capacity	W	1000					1000			1000					1000		
Current drawn	A	4.35					4.35			4.35					4.35		
Eurovent energy class FCEER/FCCOP		E/E					E/E			E/E					E/E		
Connection diameter	in	3/4 gas					3/4 gas			3/4 gas					3/4 gas		

* Eurovent conditions: Entering air temperature = 27°C db/19°C wb – entering/leaving water temperature = 7°C/12°C, high fan speed.
** Eurovent conditions: Entering air temperature = 20°C, entering water temperature = 50°C, same water flow rate as in cooling mode.
*** Based on a hypothetical acoustic attenuation for the room and the air distribution system of -9 dB(A).
† This unit complies with all applicable standards for EC marking (for further details see Declaration of Conformity). Except the unit size 42N_S65 which is not CE labeled due to fan efficiency regulation 327/2011 but is fully compliant with Machinery (2006/42/EC) and Electromagnetic Compatibility (2004/108/EC) directives.

Four-pipe coil

42N_, 4-pipe coil		S15					S20					S26		
Fan speed		**R1**	**R2**	**R3**	**R4**	**R5**	**R1**	**R2**	**R3**	**R4**	**R5**	**R1**	**R2**	**R3**
Fan type		One, tangential					One, centrifugal					One, centrifugal		
Air flow	l/s	96	82	69	55	34	126	106	91	79	59	189	148	93
	m^3/h	345	296	247	198	123	453	382	327	283	214	681	534	334
Cooling mode*														
Total cooling capacity	kW	1,46	1,3	1,15	1,04	0,75	2,04	1,89	1,65	1,47	1,19	2,7	2,29	1,67
Sensible cooling capacity	kW	1,25	1,13	0,98	0,86	0,6	1,71	1,55	1,35	1,19	0,96	2,34	1,94	1,37
Water flow rate	l/s	0,07	0,06	0,06	0,05	0,04	0,1	0,09	0,08	0,07	0,06	0,13	0,11	0,08
	l/h	250	220	200	180	130	350	320	280	250	210	460	390	290
	m^3/h	0,25	0,22	0,2	0,18	0,13	0,35	0,32	0,28	0,25	0,21	0,46	0,39	0,29
Water pressure drop	kPa	17	14	11	9	5	5	5	4	3	2	8	5	3
Water content	l	0.6					1.1					1.1		
Heating mode**														
Heating capacity	kW	1,44	1,29	1,15	0,95	0,58	2,89	2,59	2,41	2,23	1,81	3,76	3,21	2,49
Water flow rate	l/s	0,04	0,03	0,03	0,02	0,01	0,07	0,06	0,06	0,06	0,04	0,09	0,08	0,06
	l/h	130	110	100	80	50	250	230	210	200	160	330	280	220
	m^3/h	0,13	0,11	0,1	0,08	0,05	0,25	0,23	0,21	0,2	0,16	0,33	0,28	0,22
Water pressure drop	kPa	3	2	2	1	1	10	8	7	6	4	15	11	7
Water content	l	0.2					0.3					0.3		
Sound levels														
Sound power level	dB(A)	52	47	43	37	29	52	46	43	37	32	61	54	44
Sound pressure level***	dB(A)	43	38	34	28	20	43	37	34	28	23	52	45	35
NR Value		39	34	29	23	16	36	32	29	22	15	47	40	31
Electrical data														
Power input	W	30	23	19	17	16	36	34	31	30	29	45	55	65
Current drawn	A	0.13	0.11	0.09	0.08	0.08	0.16	0.15	0.14	0.13	0.12	0.3	0.25	0.2
Eurovent energy class FCEER/FCCOP		E/E					E/E					E/E		
Connection diameter														
Cooling	in	3/4 gas					3/4 gas					3/4 gas		
Heating	in	1/2 gas					1/2 gas					1/2 gas		

* Eurovent conditions: Entering air temperature = 27°C db/19°C wb – entering/leaving water temperature = 7°C/12°C, high fan speed.
** Eurovent conditions: Entering air temperature = 20°C, entering water temperature = 50°C, same water flow rate as in cooling mode.
*** Based on a hypothetical acoustic attenuation for the room and the air distribution system of -9 dB(A).
† This unit complies with all applicable standards for EC marking (for further details see Declaration of Conformity). Except the unit size 42N_S65 which is not CE labeled due to fan efficiency regulation 327/2011 but is fully compliant with Machinery (2006/42/EC) and Electromagnetic Compatibility (2004/108/EC) directives.

Physical and electrical data

Four-pipe coil

42N_, 4-pipe coil		S30					S42			S45					S65†		
Fan speed		**R1**	**R2**	**R3**	**R4**	**R5**	**R1**	**R2**	**R3**	**R1**	**R2**	**R3**	**R4**	**R5**	**R1**	**R2**	**R3**
Fan type		Two, centrifugal					Two, centrifugal			Two, centrifugal					Two, centrifugal		
Air flow	l/s	205	181	152	126	97	267	221	147	332	275	224	184	146	420	330	236
	m^3/h	739	651	547	454	349	960	795	530	1195	991	805	663	524	1511	1187	851
Cooling mode*																	
Total cooling capacity	kW	3,2	2,97	2,72	2,41	1,98	3,81	3,41	2,66	4,82	4,28	3,8	3,25	2,69	5,75	4,97	4
Sensible cooling capacity	kW	2,71	2,49	2,23	1,94	1,57	3,24	2,84	2,14	4,13	3,61	3,13	2,65	2,17	4,88	4,1	3,2
Water flow rate	l/s	0,15	0,14	0,13	0,11	0,09	0,18	0,16	0,13	0,23	0,21	0,18	0,16	0,13	0,28	0,24	0,19
	l/h	550	510	470	410	340	650	580	460	830	740	650	560	460	990	850	700
	m^3/h	0,55	0,51	0,47	0,41	0,34	0,65	0,58	0,46	0,83	0,74	0,65	0,56	0,46	0,99	0,85	0,7
Water pressure drop	kPa	13	11	10	8	5	15	13	8	26	21	17	13	9	36	28	19
Water content	l	1.5					1.5			1.8					1,8		
Heating mode**																	
Heating capacity	kW	4,16	3,76	3,47	3,18	2,7	5,02	4,43	3,39	6,05	5,58	4,95	4,49	3,86	7,16	6,06	5,07
Water flow rate	l/s	0,1	0,09	0,08	0,08	0,07	0,12	0,11	0,08	0,15	0,14	0,12	0,11	0,09	0,18	0,15	0,13
	l/h	370	330	300	280	240	440	390	300	530	490	440	390	340	630	530	450
	m^3/h	0,37	0,33	0,3	0,28	0,24	0,44	0,39	0,3	0,53	0,49	0,44	0,39	0,34	0,63	0,53	0,45
Water pressure drop	kPa	22	18	16	14	10	31	25	15	46	40	33	27	21	63	47	34
Water content	l	0.4					0.4			0.5					0.5		
Sound levels																	
Sound power level	dB(A)	56	51	47	42	36	62	57	47	62	57	55	47	41	68	62	54
Sound pressure level***	dB(A)	47	42	38	33	27	53	48	38	53	48	46	38	32	59	53	45
NR Value		41	37	33	28	22	48	43	34	48	43	41	34	28	54	49	40
Electrical data																	
Power input	W	57	50	46	44	42	100	75	45	129	92	83	77	69	165	125	90
Current drawn	A	0.25	0.23	0.21	0.2	0.19	0.45	0.35	0.21	0.55	0.4	0.37	0.34	0.31	0.7	0.6	0.4
Eurovent energy class FCEER/FCCOP		E/E					E/E			E/E					E/E		
Connection diameter																	
Cooling	in	3/4 gas					3/4 gas			3/4 gas					3/4 gas		
Heating	in	1/2 gas					1/2 gas			1/2 gas					1/2 gas		

* Eurovent conditions: Entering air temperature = 27°C db/19°C wb – entering/leaving water temperature = 7°C/12°C, high fan speed.
** Eurovent conditions: Entering air temperature = 20°C, entering water temperature = 50°C, same water flow rate as in cooling mode.
*** Based on a hypothetical acoustic attenuation for the room and the air distribution system of -9 dB(A).
† This unit complies with all applicable standards for EC marking (for further details see Declaration of Conformity). Except the unit size 42N_S65 which is not CE labeled due to fan efficiency regulation 327/2011 but is fully compliant with Machinery (2006/42/EC) and Electromagnetic Compatibility (2004/108/EC) directives.

Units with LEC motors, two and four-pipe coils

42N_, 2-pipe coil		E19					E29					E39				
Fan speed	%	100	80	60	40	20	100	80	60	40	20	100	80	60	40	20
Fan type		One, tangential					One, centrifugal					Two, centrifugal				
Air flow	l/s	96	82	69	55	34	126	106	91	79	59	205	181	152	126	97
	m^3/h	345	296	247	198	123	453	382	327	283	214	739	651	547	454	349
Cooling mode*																
Total cooling capacity	kW	1.2	1,09	0,97	0,83	0,58	2,13	2,01	1,78	1,54	1,15	3,68	3,34	2,91	2,45	1,92
Sensible cooling capacity	kW	1,1	1,01	0,89	0,74	0,5	1,77	1,62	1,42	1,23	0,93	3,04	2,73	2,35	1,97	1,4
Water flow rate	l/s	0,06	0,05	0,05	0,04	0,03	0,1	0,09	0,09	0,07	0,06	0,18	0,16	0,14	0,12	0,09
	l/h	210	190	170	140	100	370	340	310	260	200	630	570	500	420	330
	m^3/h	0,21	0,19	0,17	0,14	0,1	0,37	0,34	0,31	0,26	0,2	0,63	0,57	0,5	0,42	0,33
Water pressure drop	kPa	12	10	8	6	3	5	5	4	3	2	16	14	11	8	5
Water content	l															
Heating mode**																
Heating capacity	kW	1,87	1,74	1,48	1,29	0,88	3,01	2,72	2,36	2,05	1,59	4,77	4,33	3,78	3,25	2,62
Water pressure drop	kPa	10	8	7	5	3	4	4	3	2	1	13	11	8	6	4
Water content	l	0.6					1.4					1.8				
Sound levels																
Sound power level	dB(A)	52	47	43	37	29	52	46	43	37	32	56	51	47	42	36
Sound pressure level***	dB(A)	43	38	34	28	20	43	37	34	28	23	47	42	38	33	27
NR Value		39	34	29	23	16	36	32	29	22	15	41	37	33	28	22
Electrical data																
Power input	W	14	10	7	4	3	17	12	8	4	3	39	26	17	11	6
Current drawn	A	0.15	0,14	0,13	0,12	0,1	0.16	0,13	0,12	0,11	0,1	0.29	0.21	0.16	0.12	0.1
Electric heater																
High capacity	W	800					1000					2000				
Current drawn	A	3.48					4.35					8.7				
High capacity	W	500					500					1000				
Current drawn	A	2.18					2.18					4.35				
Eurovent energy class FCEER/FCCOP		E/E					A/A					E/E				
Connection diameter	in	3/4 gas					3/4 gas					3/4 gas				

* Eurovent conditions: Entering air temperature = 27°C db/19°C wb – entering/leaving water temperature = 7°C/12°C, high fan speed.
** Eurovent conditions: Entering air temperature = 20°C, entering water temperature = 50°C, same water flow rate as in cooling mode.
*** Based on a hypothetical acoustic attenuation for the room and the air distribution system of -9 dB(A).
† This unit complies with all applicable standards for EC marking (for further details see Declaration of Conformity). Except the unit size 42N_S65 which is not CE labeled due to fan efficiency regulation 327/2011 but is fully compliant with Machinery (2006/42/EC) and Electromagnetic Compatibility (2004/108/EC) directives.

Physical and electrical data

Units with LEC motors, two and four-pipe coils

42N_, 2-pipe coil		E49					E69				
Fan speed	%	100	80	60	40	20	100	80	60	40	20
Fan type		Two, centrifugal					Two, centrifugal				
Air flow	l/s	332	323	314	306	385	410	399	388	378	476
	m^3/h	1195	991	805	663	524	1476	1314	1134	954	792
Cooling mode*											
Total cooling capacity	kW										
Sensible cooling capacity	kW	5,32	4,76	3,94	3,25	2,58	6	5,52	4,85	4,26	3,57
Water flow rate	l/s	4,58	4	3,3	2,73	2,1	5,1	4,7	4,1	3,57	2,97
	l/h	0,25	0,23	0,19	0,16	0,12	0,29	0,26	0,23	0,2	0,18
	m^3/h	910	820	680	560	440	1040	950	840	730	630
Water pressure drop	kPa	0,91	0,82	0,68	0,56	0,44	1,04	0,95	0,84	0,73	0,63
Water content	l	11	9	7	4	3	15	13	11	8	6
Heating mode**											
Heating capacity	kW	8,04	7	5,84	4,9	3,96	9,3	8,56	7,55	6,67	5,65
Water pressure drop	kPa	9	7	5	4	3	12	10	9	6	5
Water content	l	2.1					2.1				
Sound levels											
Sound power level	dB(A)	62	57	55	47	41	68	65	62	57	53
Sound pressure level***	dB(A)	53	48	46	38	32	59	56	53	48	44
NR Value		48	43	41	34	28	54	51	48	43	40
Electrical data											
Power input	W	64	41	25	14	8	127	90	62	40	25
Current drawn	A	0.52	0.35	0.22	0.15	0.10	0.94	0.68	0.46	0.31	0.21
Electric heater											
High capacity	W	2000					2000				
Current drawn	A	8.7					8.7				
High capacity	W	1000					1000				
Current drawn	A	4.35					4.35				
Eurovent energy class FCEER/FCCOP		A/A					C/C				
Connection diameter	in	3/4 gas					3/4 gas				

Based on Eurovent conditions:

* Cooling mode (2-pipe and 4-pipe coil): entering air temperature 27°C db/19°C wb, entering/leaving water temperature 7°C/12°C, high fan speed.

** Heating mode (2-pipe coil): entering air temperature 20°C, entering water temperature 50°C, high fan speed, same water flow rate as in cooling mode.
Heating mode (4-pipe coil): entering air temperature 20°C, entering water temperature 70°C, high fan speed, water temperature difference = 10 K.

*** Based on a hypothetical acoustic attenuation for the room and the air distribution system of -9 dB(A).

Units with LEC motors, two and four-pipe coils

42N_, 4-pipe coil		E19					E29					E39				
Fan speed		100	80	60	40	20	100	80	60	40	20	100	80	60	40	20
Fan type		One, tangential					One, centrifugal					Two, centrifugal				
Air flow	l/s	96	93	91	88	111	126	122	119	116	146	205	200	194	189	238
	m^3/h	345	296	247	198	123	453	382	327	283	214	739	651	547	454	349
Cooling mode*																
Total cooling capacity	kW	1,46	1,3	1,15	1,04	0,75	2,04	1,89	1,65	1,47	1,19	3,2	2,97	2,72	2,41	1,98
Sensible cooling capacity	kW	1,25	1,13	0,98	0,86	0,6	1,71	1,55	1,35	1,19	0,96	2,71	2,49	2,23	1,94	1,57
Water flow rate	l/s	0,07	0,06	0,06	0,05	0,04	0,1	0,09	0,08	0,07	0,06	0,15	0,14	0,13	0,11	0,09
	l/h	250	220	200	180	130	350	320	280	250	210	550	510	470	410	340
	m^3/h	0,25	0,22	0,2	0,18	0,13	0,35	0,32	0,28	0,25	0,21	0,55	0,51	0,47	0,41	0,34
Water pressure drop	kPa	17	14	11	9	5	5	5	4	3	2	13	11	10	8	5
Water content	l	0.6					1.1					1.5				
Heating mode**																
Heating capacity	kW	1,44	1,29	1,15	0,95	0,58	2,89	2,59	2,41	2,23	1,81	4,16	3,76	3,47	3,18	2,7
Water flow rate	l/s	0,04	0,03	0,03	0,02	0,01	0,07	0,06	0,06	0,06	0,04	0,1	0,09	0,08	0,08	0,07
	l/h	130	110	100	80	50	250	230	210	200	160	370	330	300	280	240
	m^3/h	0,13	0,11	0,1	0,08	0,05	0,25	0,23	0,21	0,2	0,16	0,37	0,33	0,3	0,28	0,24
Water pressure drop	kPa	3	2	2	1	1	10	8	7	6	4	22	18	16	14	10
Water content	l	0.2					0.3					0.4				
Sound levels																
Sound power level	dB(A)	52	47	43	37	29	52	46	43	37	32	56	51	47	42	36
Sound pressure level***	dB(A)	43	38	34	28	20	43	37	34	28	23	47	42	38	33	27
NR Value		39	34	29	23	16	36	32	29	22	15	41	37	33	28	22
Electrical data																
Power input	W	14	10	7	4	3	17	12	8	4	3	39	26	17	11	6
Current drawn	A	0.15	0,14	0,13	0,12	0,1	0.16	0,13	0,12	0,11	0,1	0.29	0.21	0.16	0.12	0.1
Eurovent energy class FCEER/FCCOP		A/B					A/A					A/A				
Connection diameter																
Cooling	in	3/4 gas					3/4 gas					3/4 gas				
Heating	in	1/2 gas					1/2 gas					1/2 gas				

Based on Eurovent conditions:

* Cooling mode (2-pipe and 4-pipe coil): entering air temperature 27°C db/19°C wb, entering/leaving water temperature 7°C/12°C, high fan speed.

** Heating mode (2-pipe coil): entering air temperature 20°C, entering water temperature 50°C, high fan speed, same water flow rate as in cooling mode.
Heating mode (4-pipe coil): entering air temperature 20°C, entering water temperature 70°C, high fan speed, water temperature difference = 10 K.

*** Based on a hypothetical acoustic attenuation for the room and the air distribution system of -9 dB(A).

Physical and electrical data

Units with LEC motors, two and four-pipe coils

42N_, 4-pipe coil		E49					E69				
Fan speed		100	80	60	40	20	100	80	60	40	20
Fan type		Two, centrifugal					Two, centrifugal				
Air flow	l/s	332	275	224	184	146	410	399	388	378	476
	m3/h	1195	991	805	663	524	1476	1314	1134	954	792
Cooling mode*											
Total cooling capacity	kW	4,82	4,28	3,8	3,25	2,69	5,47	5,19	4,75	4,34	3,8
Sensible cooling capacity	kW	4,13	3,61	3,13	2,65	2,17	4,65	4,36	3,9	3,53	3,05
Water flow rate	l/s	0,23	0,21	0,18	0,16	0,13	0,26	0,25	0,23	0,21	0,19
	l/h	830	740	650	560	460	940	890	820	750	670
		0,83	0,74	0,65	0,56	0,46	0,94	0,89	0,82	0,75	0,67
Water pressure drop	kPa	26	21	17	13	9	31	27	23	19	20
Water content	l	1.8					1.8				
Heating mode**											
Heating capacity	kW	6,05	5,58	4,95	4,49	3,86	6,99	6,57	6,04	5,43	4,81
Water flow rate	l/s	0,15	0,14	0,12	0,11	0,09	0,17	0,16	0,15	0,13	0,12
	l/h	530	490	440	390	340	610	580	530	480	420
	m^3/h	0,53	0,49	0,44	0,39	0,34	0,61	0,58	0,53	0,48	0,42
Water pressure drop	kPa	46	40	33	27	21	63	56	49	40	32
Water content	l	0.5	0.5								
Sound levels											
Sound power level	dB(A)	62	57	55	47	41	68	65	62	57	53
Sound pressure level***	dB(A)	53	48	46	38	32	59	56	53	48	44
NR Value		48	43	41	34	28	54	51	48	43	40
Electrical data											
Power input	W	64	41	25	14	8	127	90	62	40	25
Current drawn	A	0.52	0.35	0.22	0.15	0.10	0.94	0.68	0.46	0.31	0.21
Eurovent energy class FCEER/FCCOP		A/A					C/C				
Connection diameter											
Cooling	in	3/4 gas					3/4 gas				
Heating	in	1/2 gas					1/2 gas				

Based on Eurovent conditions:

* Cooling mode (2-pipe and 4-pipe coil): entering air temperature 27°C db/19°C wb, entering/leaving water temperature 7°C/12°C, high fan speed.

** Heating mode (2-pipe coil): entering air temperature 20°C, entering water temperature 50°C, high fan speed, same water flow rate as in cooling mode.
Heating mode (4-pipe coil): entering air temperature 20°C, entering water temperature 70°C, high fan speed, water temperature difference = 10 K.

*** Based on a hypothetical acoustic attenuation for the room and the air distribution system of -9 dB(A).

Features and advantages

Features

- With its sleek styling the 42N encased units blend in perfectly with any room décor. The pre-painted steel panels are protected by a high-quality paint finish.
- The flexibility of the plastic-moulded unit drain pan allows the same unit to be installed in a vertical or horizontal position without the need for a dedicated accessory.
- Integrated, factory-mounted cooling and heating coil for four-pipe applications.
- The 42N units were designed for extremely quiet operation with sound levels that set new comfort standards for buildings. The new fan/motor assembly design ensures whisper-quiet operation (10 dB(A) less compared to the previous version). Particular attention has been given to the low fan speed, typically used at night.
- Motors
  The Idrofan is available with a multi-speed motor, extended to five fixed speeds to improve its flexibility and cover all customer applications. The Idrofan is now available with ultra-low noise levels to make it one of the quietest fan coils on the market.

  The Idrofan is also available with variable-speed LEC (= low energy consumption) motors, that meet the new building energy performance objectives.

  The LEC solution enhances unit performances offering:
  - Reduced energy costs - the LEC motor reduces fan coil consumption by 50 to 75%. The LEC option meets the new building energy management regulations.
  - Improved comfort - the LEC motor with variable fan speed reduces noise levels compared to multi-speed fans, offering ultra-quiet air flow down to very low operating levels. With the NTC controller, a maximum fan speed can be set to allow better sound level management.
  - Maximum flexibility - auto-adaptive air flow rate adjust-ment from 0 to 100% ensures perfect cooling and heating conditions in the room.
  - Extended life time - LEC motors with brushless techno-logy use a lower fan motor temperature for extended operating life.
- Filters
  The standard filter for the Idrofan series has a pleated filtration surface, resulting in a 87% larger surface than a conventional filter, with the following additional advantages:
  - Lower air flow per unit area, resulting in lower pressure drop and reduced noise level.
  - The average interval between filter cleaning is three times longer, compared to standard filters.
  - The filter material is polypropylene and the grade is G1.

  In the Idrofan series the filter is located at the bottom of the unit. Cleaning is easy: after removing a safety screw, the filter sides can be manually unclipped. The filter frame can be pulled down and the filter can then be removed easily. Re-assembly is just as easy, reversing the sequence.
  The filter and filter position within the unit are designed to prevent air bypass around the filter, to ensure that the air is always filtered and clean.
- Ease of installation
  The Idrofan series fan coils are extremely easy to install. For horizontal under-ceiling installations with cabinet the installer's task is significantly simplified.

  Robust hooks allow easy and fast attachment of the unit. No calculations are needed to determine the correct slope for proper condensate water drainage.

  Even the installation of floor-mounted units is simple, the new hook dimensions and positions help fixing the units firmly against the wall.

  All these design aspects minimise installation time and improve the long-term reliability, avoiding small mistakes that could impair the reliability of installed units over time.

Carrier controller range

The Idrofan fan coil is available with the complete range of Carrier controllers. Several tests ensure easy installation. The number of available controllers offers more and improved features, and easy selection according to application needs.

Electronic thermostat A-B-C-D types

- Carrier electronic thermostat range is available for all Carrier hydronic terminals ranges:
  - Type A: Two-pipe application with AC motors
  - Type B: Four-pipe or two-pipe applications with electric heaters with AC motors
  - Type C: Two-pipe application with EC motors
  - Type D: Four-pipe or two-pipe applications with electric heaters with EC motors
- The thermostat for FCU with EC motors option is managing 3 configurable discrete speeds through 0-10 V signal.
- The thermostats have an elegant square shape with a coaxial knob to set room temperature and 3 buttons to set up fan speed, cooling or heating mode, and On/Off, as desired by the customer.
- Wall-mounted controls are easily and discreetly integrated in any room environment.
- The electronic thermostats set range is from10 °C to 30 °C with the possibility to limit the temperature in public buildings where low energy consumption is a key requirement via a dip-switch inside the control (Cooling range 23 °C/30 °C, heating range 10 °C/21 °C).

The following Features are available as setting:

- **Auto fan:** The fan speed is automatically set by the control; when the room temperature is far from the set point, high fan speed is selected. As the room temperature approaches the desired value, the fan speed decreases until the minimum speed is reached.
- **Automatic changeover:** Automatic changeover from the cooling to heating mode, based on the water temperature, ensures that the ideal room temperature is maintained.
- **Remote changeover:** Automatic changeover from cooling to heating mode, based on the remote signal from the monitoring system.

- **Warm and cold draught protection:** This feature stops the fan when the set point condition is satisfied and the water temperature is too low or too high, ensuring that air that is too cold or too warm does not cause discomfort to the room occupants.
- **Air sensor:** This is unit-mounted – if the control is wall mounted, a second air sensor located in the control can be used for fine tuning of the desired room temperature.
- **Frost protection:** This function ensures that the room temperature is kept above a minimum level. If the unit is in off mode, and the room temperature drops below 7 °C, frost protection is enabled and the unit operates in heating mode until the temperature rises above 9 °C. At this point the unit is switched off again.
- **Booster heating management optimization (available with electric heater option):** If the water temperature is below 30 °C the system will work in the heat demand mode and the electric heater will be the only available heating source. If the water temperature is above 35 °C the system will work in the booster heating mode, energising the water valve and electric heater together. The booster heating function will be deactivated if the water temperature is above 45 °C (the electric heater will be de-energised).
- **Energy saving:** This feature allows saving energy when the room is unoccupied, without the need to switch off the unit. When the energy-saving button is pressed, the actual set point will be modified as follows, without changing the position of the set point selection knob: - Cooling mode: Set point raised by 4 °C - Heating mode: Set point lowered by 4 °C The unit will resume normal operation, once the energy saving button is pressed again.
- **LED intensity:** For offices or light commercial applications, 10 seconds after the latest use of the user interface, all the necessary LEDs are lighted on at a reduced intensity. As soon as the user touches again the user interface, LED have to come back to normal light. In order not to disturb hotels customers, the thermostat can be configured from Night Mode to Dark Mode: 10 seconds after the latest use of user interface, all the LEDs are switched off. As soon as the user touches again the user interface, LEDs of the current condition are switched on with normal light.
- **Air sampling:** If no fan request is made and the Air sampling jumper is in ON position, the control performs the Air sampling function: the air is moved in the room, thermal stratification is reduced, ensuring a more reliable ambient temperature reading.
- **Continuous fan:** If there is no fan request and the Continuous fan jumper is in ON position, the control selects fan speed Low, Medium or High according to the fan-speed selection, regardless of thermal station conditions. If the fan is controlled in Auto fan mode and the control is not in the demand phase, the fan is permanently activated at Low speed.
- **External contact:** A high voltage input signal for external contact is present. If the external contact is activated, device behaviour depends on its configuration on site: - Presence detection (empty room with hotel door card), Energy saving mode is activated, internal temperature is raised by 4 °C in cooling mode and reduced by 4 °C in heating mode. - Window Contact: During OFF mode (window open), all outputs are disconnected (fan, valves, etc.) and only the frost protection.
- **Master/Slave control:** Thermostat type A_AC and B_AC: the Control Board for grouping accessory (42N9006) is allowing fan speed relay only (water valves have to be wired/relayed separately) up to 300 units with control on Air temperature (no water valve), or 10 units 2 pipe with water control, or 5 units 4 pipe with water control - Thermostat type C_EC and D_EC: The Thermostat EC motor version can control up to 10 LEC units by wiring in parallel the analogue 0-10 two-wires output signal (water valves have to be wired/relayed separately).

NTC controller

- This is a communicating PID controller, combining energy-saving algorithms and full control function solutions, compatible with the Aquasmart Evolution system package. The NTC controller can manage the EC motor option, and combines energy savings with optimised comfort.

WTC Controller

- Open Communication protocol BACnet or LON
- Communication PID controller
- Large range of user interfaces wall mounted or remote
- Manage the motorized louvers of the grill in manual or automatic
- Manage the EC motor to optimise the comfort
- Manage a CO2 sensor to improve Air Quality
- Optional Light and/or Blinds management modules from same user interface
- Large range of sensors (light, presence, etc.)
- Valve options

Valve options

- Valve body: both the two-way or four-way (three-way with integrated bypass) valve options are factory-fitted and tested. The chilled-water valves are fully insulated within a moulded insulating shell, preventing condensation on the valve body, for both vertical and horizontal applications. This new shell reduces the complexity of the offer and prevents water leakage risk. Valves can be factory-fitted on the left or right-hand side.
- Valve actuators: a wide choice of actuators is available with two or four-way valve bodies to offer the right solution for any controller type and customer requirement, from on/off to proportional types, with either 230 V or 24 V power supply:
  - On/off 230 V actuator
  - On/off 24 V actuator
  - Floating 3-point 230 V actuator
  - Floating 3-point 24 V actuator
  - Modulating 0-10 V/24 V actuator
- When combined with LEC motors and the NTC controller, floating three-point 230-V actuators are recommended to increase energy savings and enhance comfort.

Main drain pan and insulation

- The main drain pan incorporates innovative technological solutions:
  - Horizontal installation: the units can be installed perfectly horizontal - the drain pan structure takes care of the slope, so that the installer avoids complex and time-consuming computations to correctly install the units.
  - Left or right-hand condensate connection is standard - the installer can easily choose unit connection on one side or the other, just by fixing the plastic cap on the opposite side.
  - Insulation: the drain pan design allows much tighter contact between drain pan and insulation, reinforced by metal clips to keep the insulation in place. This improves reliability and prevents water dripping from the unit.
  - The drain pan for the whole range is made of moulded plastic, i.e. more robust, easier and safer to service.

PTC electric heater

- Electric heater options have been enhanced with the latest PTC (positive temperature coefficient) technology. Their resistance increases as their temperature increases, so the capacity goes down accordingly. This electric heater feature allows fast heating at start-up, the heating capacity is adjusted automatically, whilst ensuring safe and reliable operation. This option is available in low and high capacity for each Idrofan size.

Feet mounting

- The installation of feet has been greatly simplified and both sides are painted. Just one clip is needed to fix the feet to the units. For this reason and for better reliability during transport, the feet are sold as options - supplied with the unit from the factory (ordering codes Z or P in the 4th digit). They are included with the unit, but not factory-mounted.

Reversibility

- If the unit received is not as required, the coil and the control box can be switched on site from left to right or vice versa (except units equipped with valves - since their installation is optimised for each side, the valve package must be replaced by a new valve kit).

Simplified accessories

- The number of accessories has been reduced to simplify selection and reduce the inventory level. The accessories offered remain unchanged to satisfy any application needs, but the number of codes has been greatly reduced.
- Aesthetics
  - Supporting feet
  - Supporting feet and cover panel
  - Return air grille for cabinet unit
  - Rear closing panel
  - Cabinet on concealed units,
  - Discharge air sleeve (concealed units only)
  - Supporting brackets (20 + 20 pieces left and right)
- Controllers and user interfaces
  - A/B/C/D-type thermostat
  - Kit for 33TA0001/33TB0001 installation on 42NM/Z
  - Cold draught prevention kit - all two-pipe sizes
  - Automatic changeover switch - all units
  - Air sensor with 15 m cable
  - Water sensor kit with 15 m cable
  - Infrared remote controller (IR2)
  - Infrared remote receiver kit (IRR)
  - ZUI1 interface 1 - Wago
  - ZUI2 interface 2 - RJ11
  - SUI1 (with fan speed selection)
  - SUI2 (without fan speed selection)
- The units comply with international standards EN60335-1 and EN60335-2-40 and are certified according to the applicable Eurovent standards for the non-ducted fan coil programme.

Aquasmart System Manager

Operating limits

Water circuit	Maximum water side pressure: 1400 kPa (142 m WG)	Minimum entering water temperature: 5°C Maximum entering water temperature: 80°C
Indoor temperature		Minimum temperature: 5°C Maximum temperature: 32°C*
Power supply	Nominal supply Operating limits	230 V - 1 ph - 50 Hz Min. 207 V - max. 253 V for units without electric heaters Min. 218 V - max. 244 V for units with electric heaters

* In heating mode with electric heater.

Two-pipe coil pressure drop

Cooling conditions (entering water temperature = 7°C)

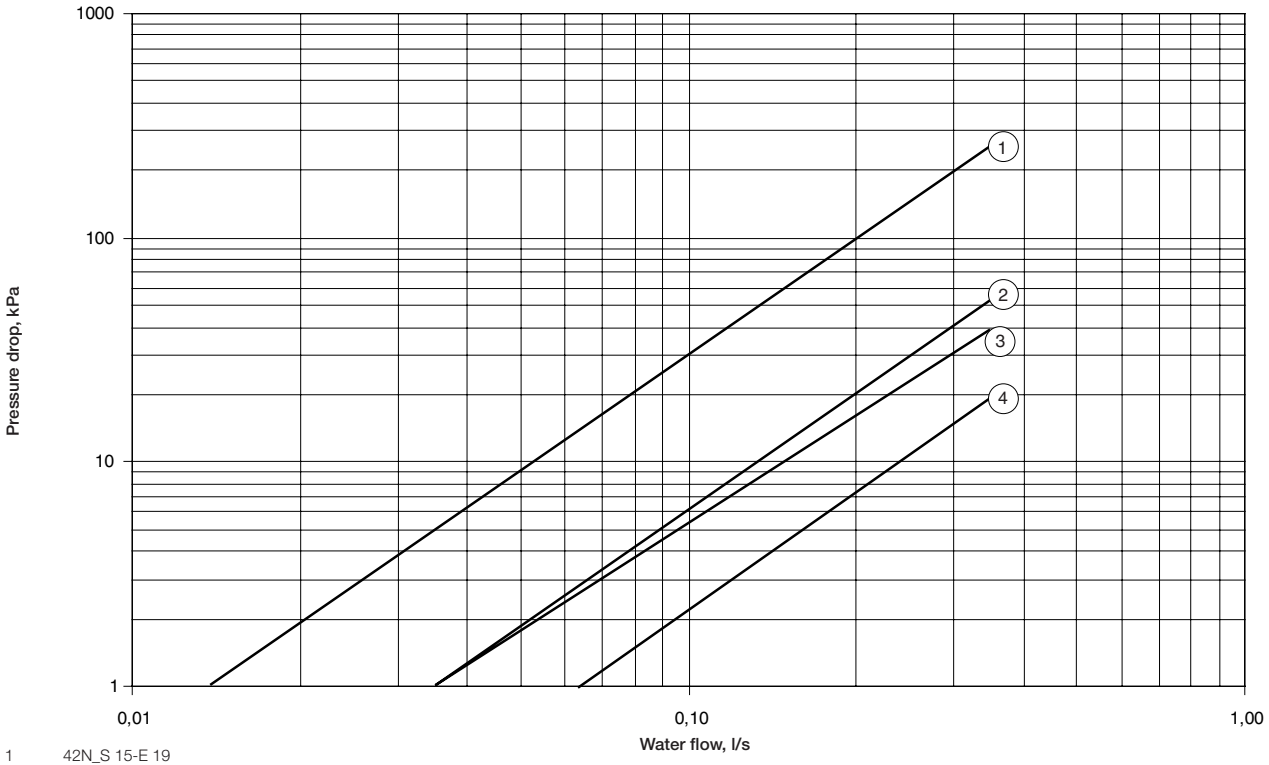

1 42N_S 15-E 19
2 42N_S 30-E 39-S 42
3 42N_S 20-S 26-E 29
4 42N_S 45-E 49-S 65-E 69

AIR TREATMENT

Heating conditions (entering water temperature = 50°C)

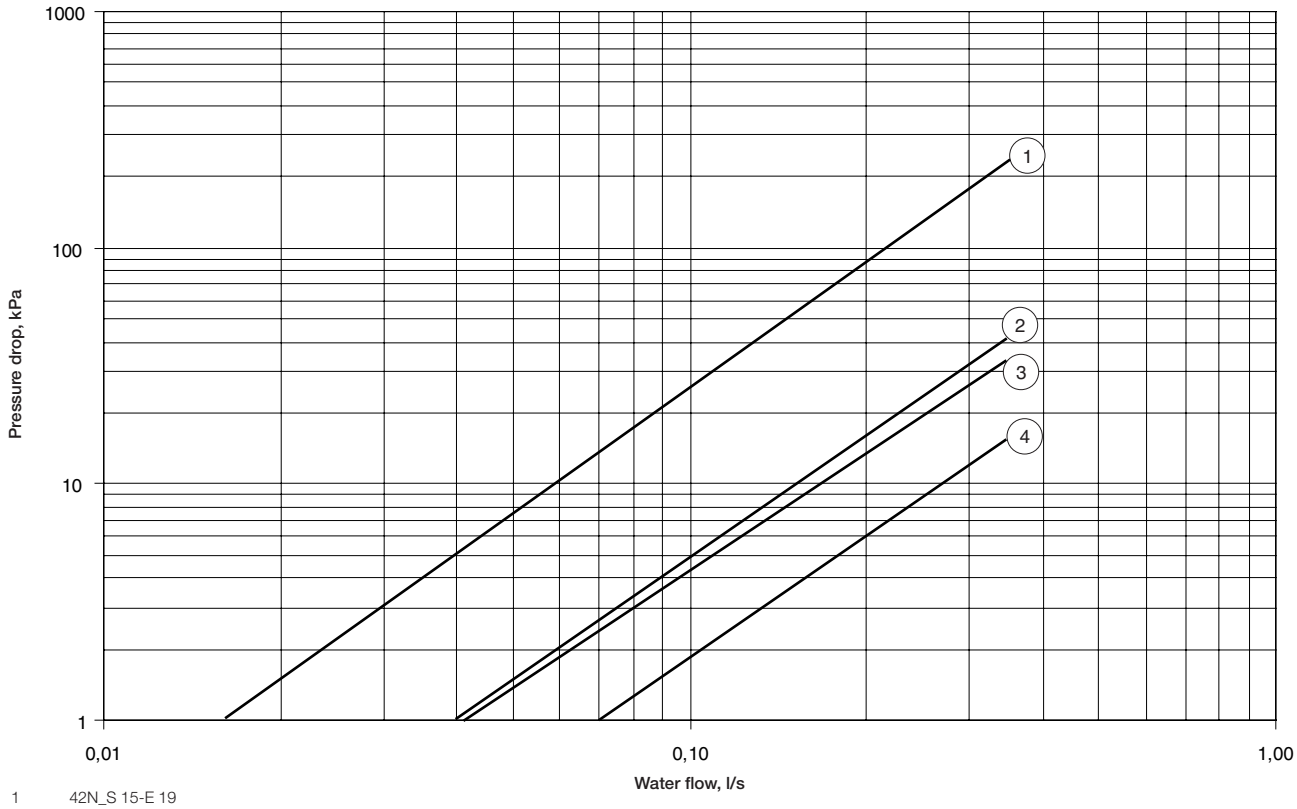

1 42N_S 15-E 19
2 42N_S 30-E 39-S 42
3 42N_S 20-S 26-E 29
4 42N_S 45-E 49-S 65-E 69

Four-pipe coil pressure drop

Cooling conditions (entering water temperature = 7°C)

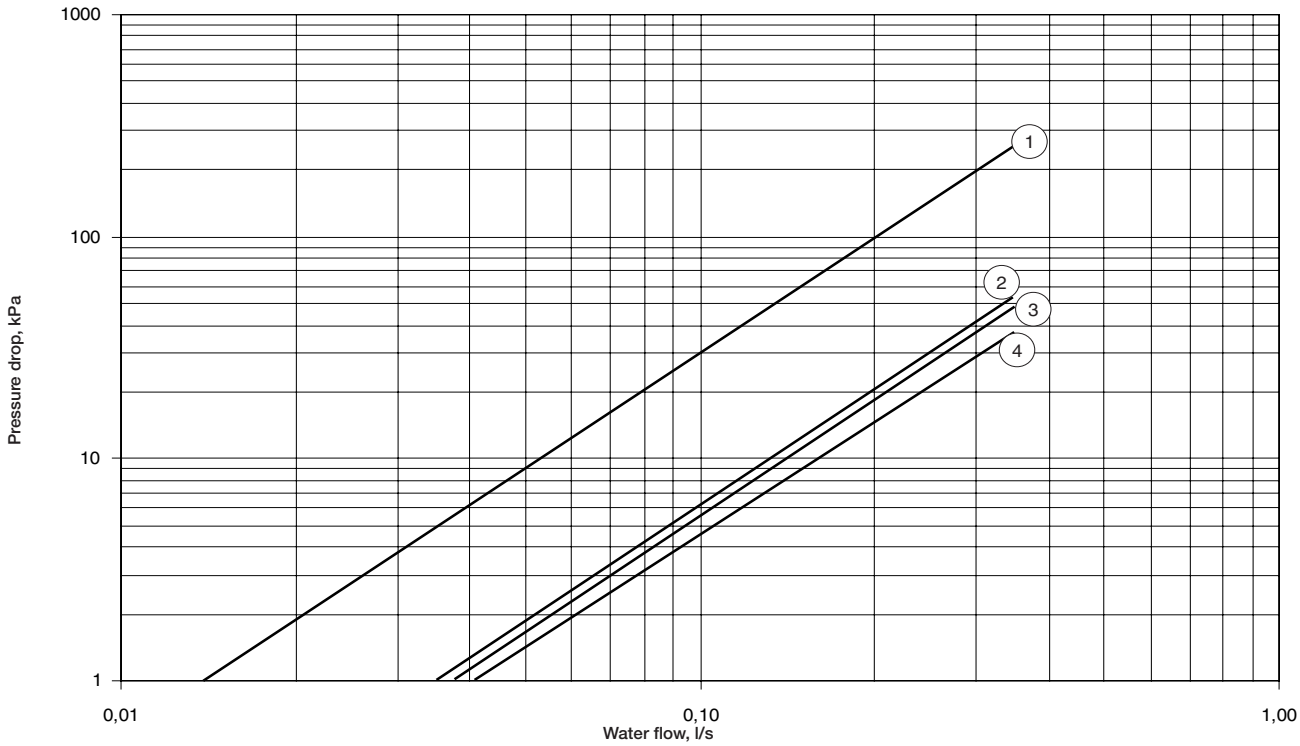

1 42N_S 15-E 19
2 42N_S 45-E 49-S 65-E 69
3 42N_S 30-E 39-S 42
4 42N_S 20-S 26-E 29

Heating conditions (entering water temperature = 70°C)

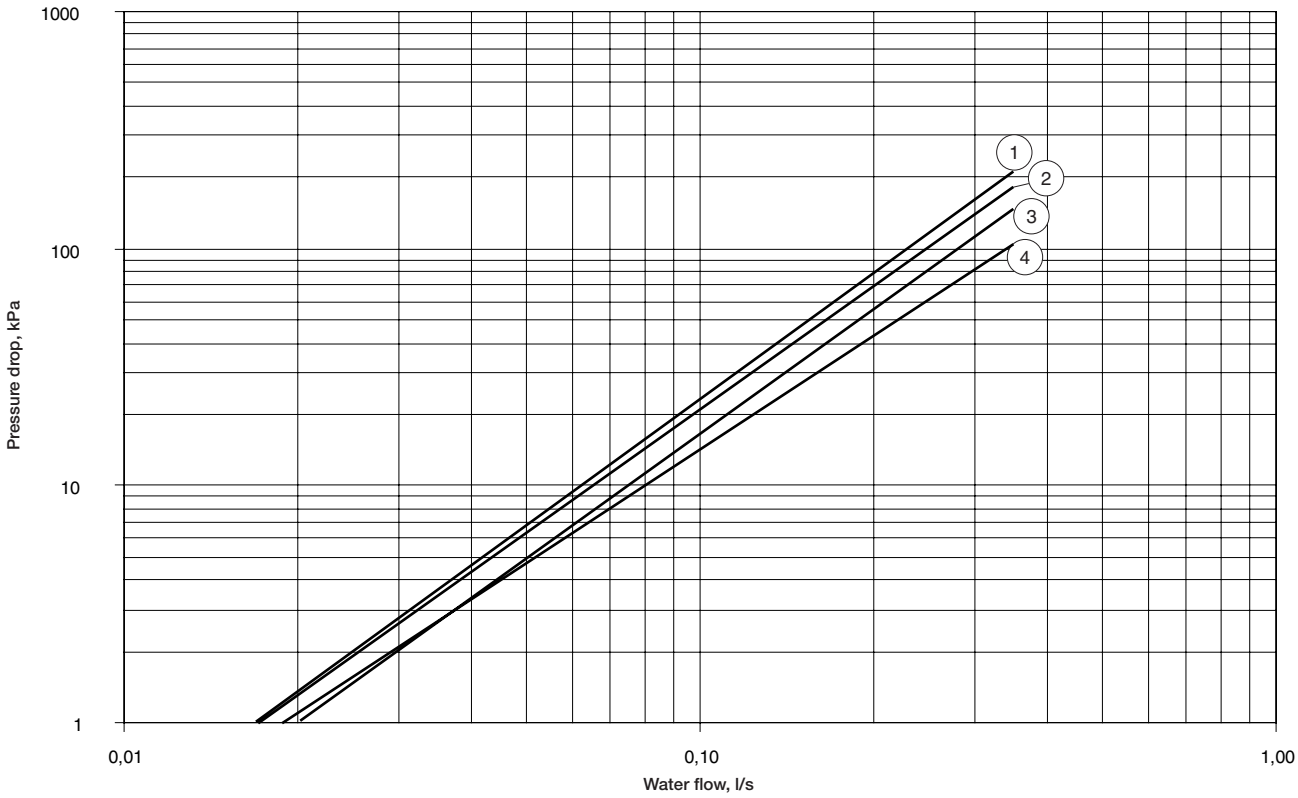

1 42N_S 45-E 49-S 65-E 69
2 42N_S 30-E 39-S 42
3 42N_S 20-S 26-E 29
4 42N_S 15-E 19

Two-way valve pressure drop

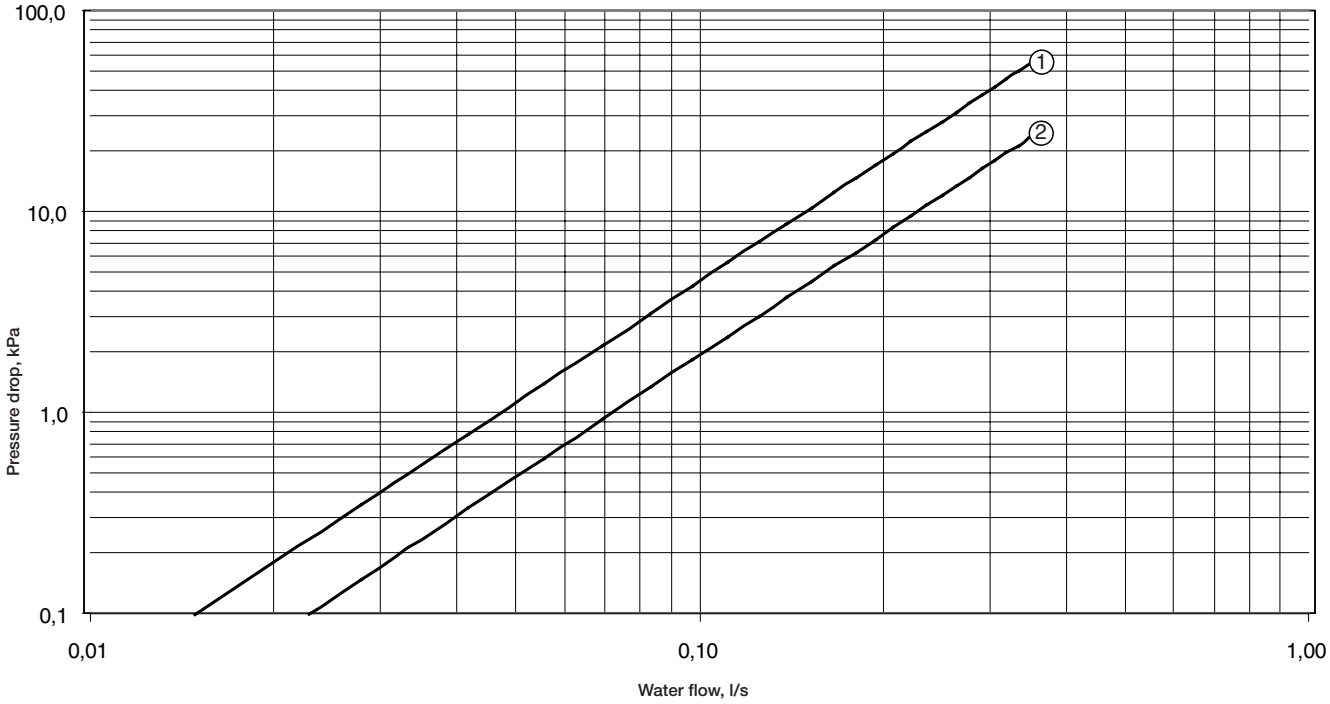

1 1/2", cold and hot
2 3/4"

Four-way valve pressure drop

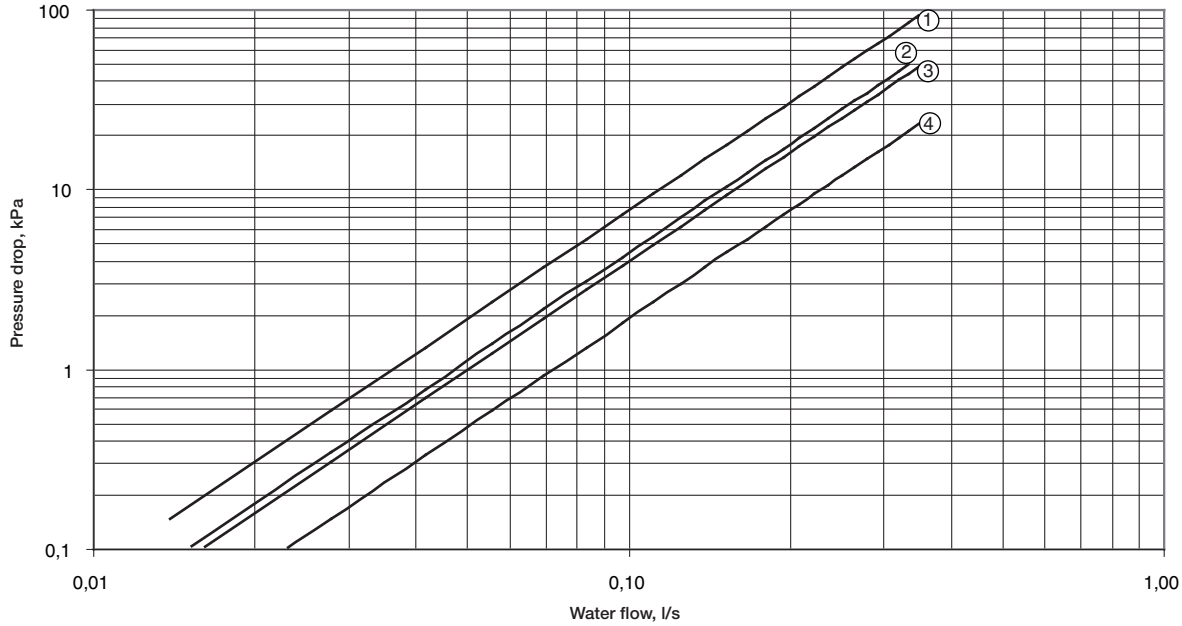

1 1/2" bypass, cold and hot
2 1/2" open, cold and hot
3 3/4" bypass
4 3/4" open

Notes:
Pressure drop values are based on a water temperature of 20°C.
For other water temperature values, use a correction factor of 0.4% per °C.

Air throw

The air throw value gives the position where the air velocity is 0.2 m/s when the air is blown horizontally with the grille pointing upwards. Air throw values are given as a guideline only, and change with room dimensions and furniture used in the room.

42N		42N_S 15-E 19			42N_S 15-E 19			42N_S 20-E 29			42N_S 26		
		Two-pipe			Four-pipe								
S 15-S 20-S 30-S 45 E 19-E 29-E 39-E 49-E 69	**S 26-S 42-S 65**	**m**	**l/s**	**m³/h**	**m**	**l/s**	**m³/h**	**m**	**l/s**	**m³/h**	**m**	**l/s**	**m³/h**
Speed 5	-	0.4	35.8	129	0.4	35.4	127	0.9	59.1	213	-	-	-
Speed 4	-	1.7	55.6	200	1.7	56.2	202	1.8	79.8	287	-	-	-
Speed 3	Speed 3	2.3	69.4	250	2.3	69.2	249	2.2	91.9	331	2.2	93.0	335
Speed 2	Speed 2	2.8	83.6	301	2.8	84.6	304	2.7	107.4	387	3.6	148.9	536
Speed 1	Speed 1	3.2	97.2	350	3.2	97.8	352	3.2	127.6	459	4.4	190.3	685

42N		42N_S 30-E 39			42N_S 42			42N_S 45-E 49			42N_S 65-E 69		
S 15-S 20-S 30-S 45 E 19-E 29-E 39-E 49-E 69	**S 26-S 42-S 65**	**m**	**l/s**	**m³/h**	**m**	**l/s**	**m³/h**	**m**	**l/s**	**m³/h**	**m**	**l/s**	**m³/h**
Speed 5	-	0.5	97.1	350	-	-	-	0.8	145.6	524	0.8	145.6	524
Speed 4	-	2.1	126.0	454	-	-	-	2.9	185.3	667	2.9	185.3	667
Speed 3	Speed 3	3.2	153.2	552	3.0	147.5	531	4.6	223.6	805	5.1	236.9	853
Speed 2	Speed 2	4.3	181.8	654	5.4	221.7	798	6.4	276.7	996	8.0	330.8	1191
Speed 1	Speed 1	5.0	207.2	746	6.6	268.0	965	8.1	332.6	1197	10.2	421.9	1519

Dimensions, vertical units with cabinet

42N_S 15-20-26-30-42-45-65 and 42N_E 19-29-39-49-69

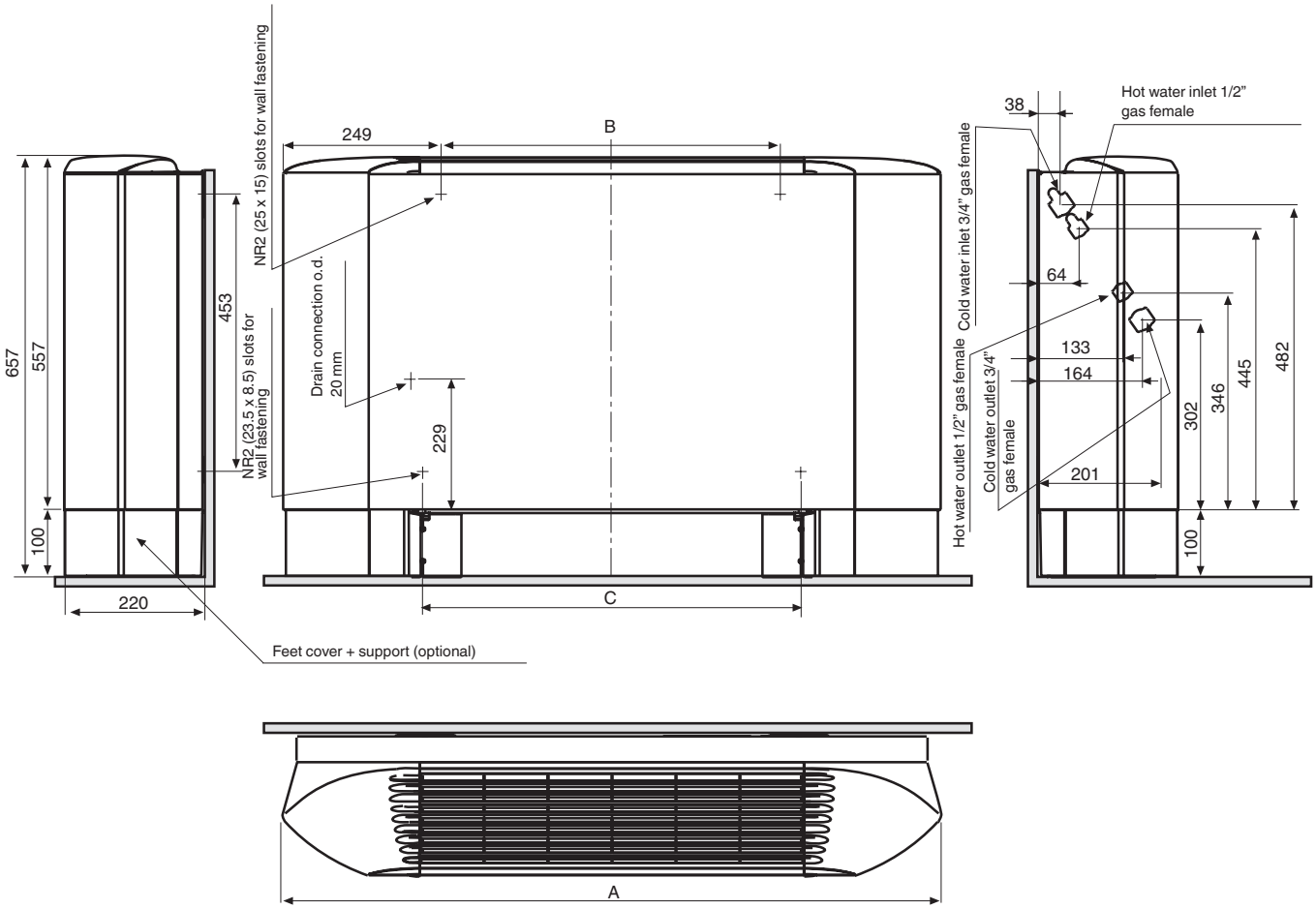

All dimensions are in mm.

42N		S 15-E 19	S 20-S 26-E 29	S 30-E 39-S 42	S 45-E 49-S 65-E 69
A		830	1030	1230	1430
B		332	532	732	932
C		432	632	832	1032
Filter dimensions		189 x 391	189 x 591	189 x 790	189 x 990
Weight	kg	17	19	22	35

Dimensions, horizontal units with cabinet

42N_S 15-20-26-30-42-45-65 and 42N_E 19-29-39-49-69

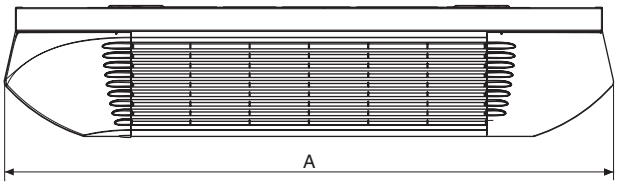

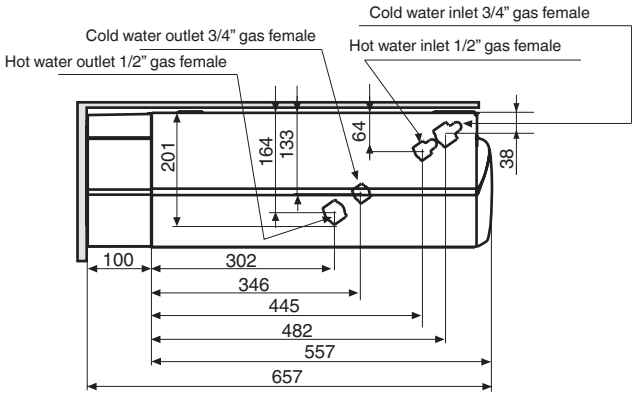

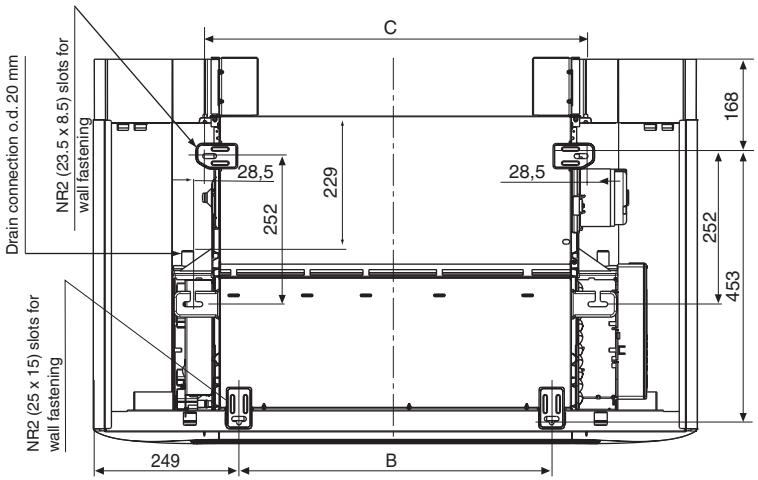

All dimensions are in mm.

42N		S 15-E 19	S 20-S 26-E 29	S 30-E 39-S 42	S 45-E 49-S 65-E 69
A		830	1030	1230	1430
B		332	532	732	932
C		432	632	832	1032
Filter dimensions		189 x 391	189 x 591	189 x 790	189 x 990
Weight	kg	17	19	22	35

Typical mounting arrangements

Air inlet and outlet opening dimensions

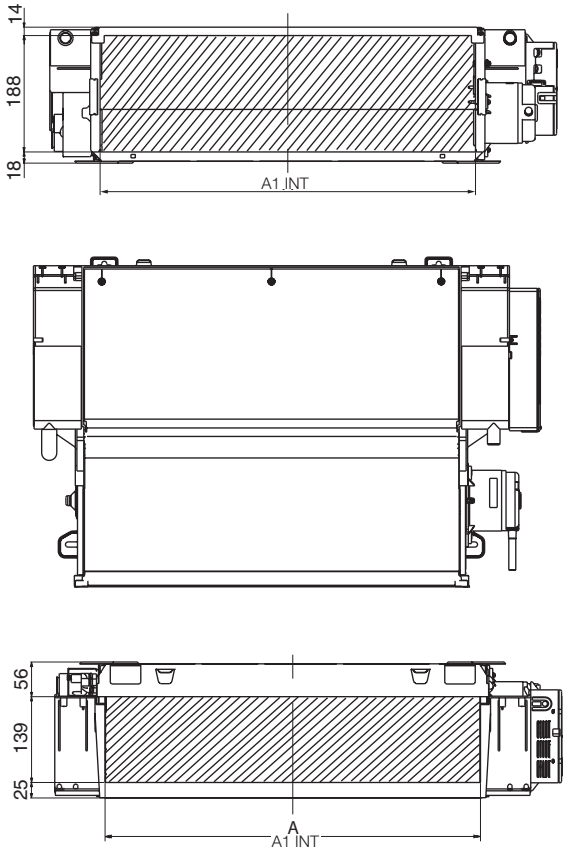

All dimensions are in mm.

42N	A1 INT
S 15-E 19	397
S 20-S 26-E 29	597
S 30-E 39-S 42	797
S 45-E 49-S 65-E 69	997

Optional air discharge and return ducts

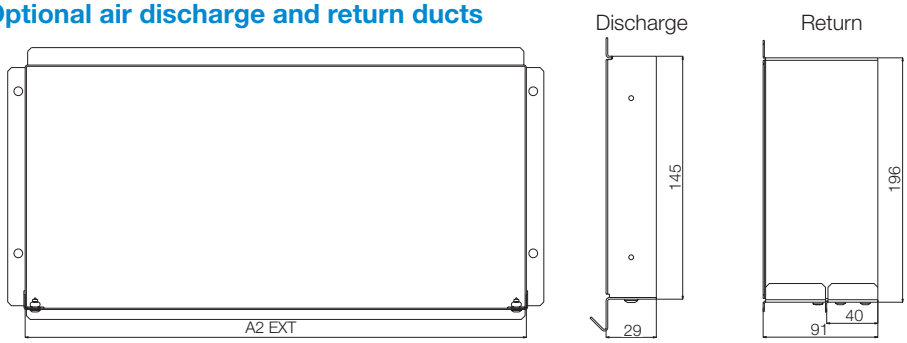

All dimensions are in mm.

42N	A2 EXT
S 15-E 19	402
S 20-S 26-E 29	602
S 30-E 39-S 42	802
S 45-E 49-S 65-E 69	1002

Valves

Two-way valves

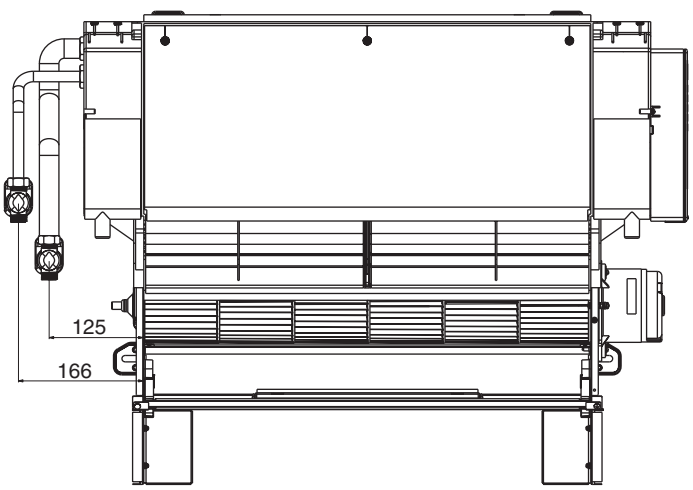

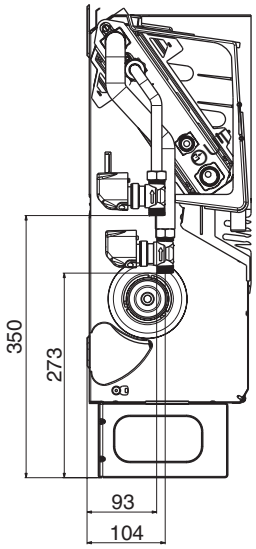

Four-way valves

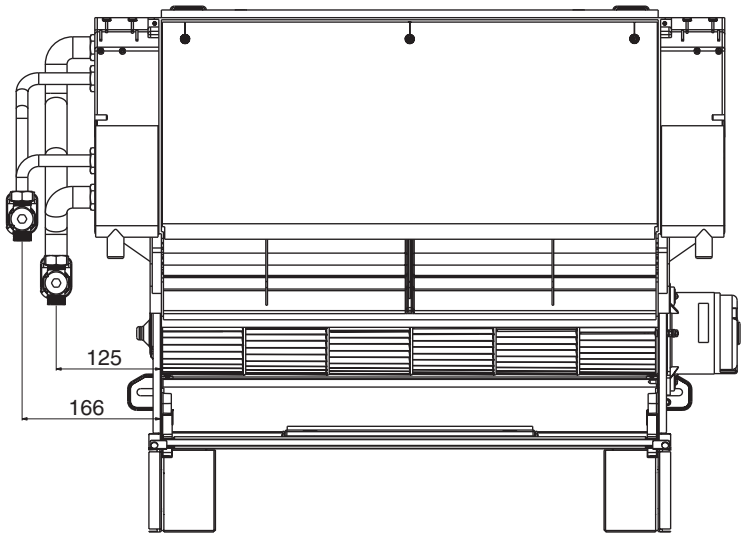

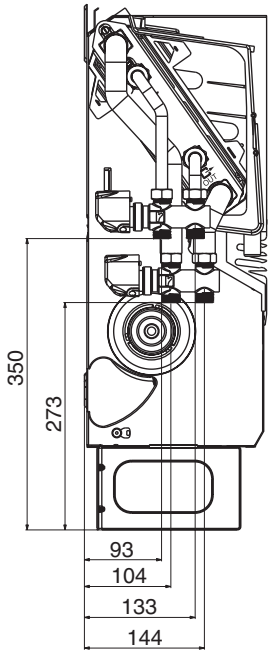

All dimensions are in mm.

Unit option (10th digit)		H 4-way valve	H 4-way valve	H 4-way valve	H 4-way valve	G 2-way valve	G 2-way valve	G 2-way valve	G 2-way valve
Valve kit		42N9185	42N9186	42N9187	42N9188	42N9194	42N9195	42N9196	42N9197
Description		1/2” cold	3/4” cold	1/2” cold + 1/2” hot	3/4” cold + 1/2” hot	1/2” cold	3/4” cold	1/2” cold + 1/2” hot	3/4” cold + 1/2” hot
2-pipe	**S 15-E 19**	X	-	-	-	X	-	-	-
	S 20-S 26-E 29	X	-	-	-	X	-	-	-
	S 30-E 39-S 42	-	X	-	-	-	X	-	-
	S 45-E 49-S 65-E 69	-	X	-	-	-	X	-	-
4-pipe	**S 15-E 19**	-	-	X	-	-	-	X	-
	S 20-S 26-E 29	-	-	X	-	-	-	X	-
	S 30-E 39-S 42	-	-	-	X	-	-	-	X
	S 45-E 49-S 65-E 69	-	-	-	X	-	-	-	X

Note: The coil can be switched from left to right on site. The unit is factory-fitted with a water valve, if required a new kit can be ordered.

42NL & 42NH

NEW

Nominal cooling capacity 0.6 to 12 kW
Nominal heating capacity 0.8 to 17 kW

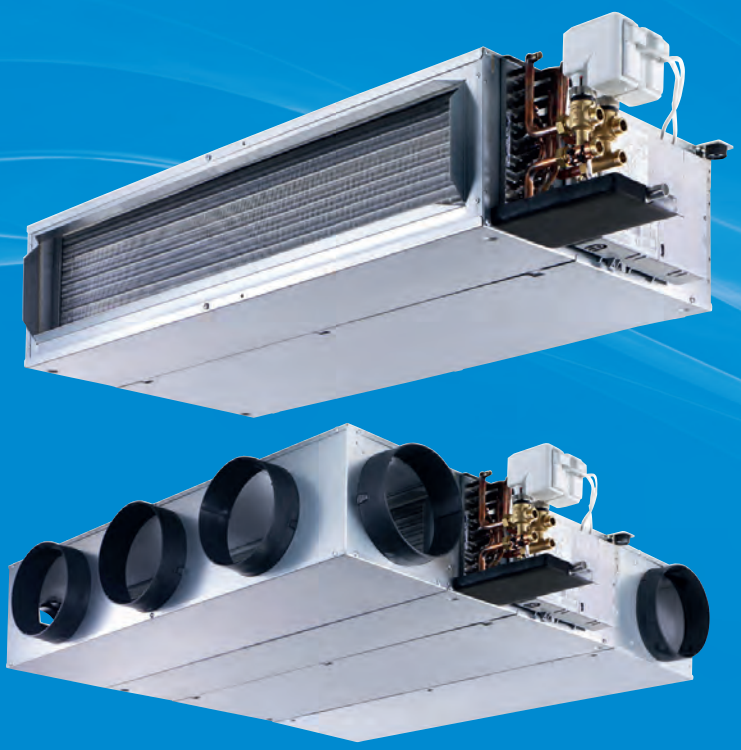

IDROFAN

Modular horizontal ducted unit

Extremely quiet operation

Low energy consumption

Flexibility for simplified installation

Improved comfort

Efficient indoor air quality

The Carrier 42NH and 42NL are available in different sizes with 2-pipe, 2-pipe plus electric heater or 4-pipe coils, with an air flow range from 100 to 2300 m^3/h, a total cooling capacity range from 0.6 kW to 12 kW and a nominal heating capacity range from 0.8 kW to 17 kW.

Compact and modular ducted unit, designed for any false ceiling installation.

Reliable and economical for tertiary building as hotel guest rooms, offices or light commercial applications.

Low height of 235 mm (sizes 2/3/4/5) and 285 mm (sizes 6/7)

Compatible with the Carrier diffuser ranges.

Extremely low sound levels for ducted applications.

Five- to Six- speed fan AC motors offers a wide choice of medium speeds.

Available with Low Energy Consumption variable-speed EC motor.

High-pressure centrifugal fan for 42NH Range

G1 filter as standard.

Safe factory installed electric heater with multiple capacity stages choices.

Low water pressure drop with factory installed valves.

Factory installed options (valves and controllers) for fast and easy installation in false ceilings.

Performance data

Physical and electrical data at Eurovent conditions

42NL - Sizes 2 and 3

With G1 filter - without plenum

42NL		225						235						229				239			
Fan speed		**R6**	**R5**	**R4**	**R3**	**R2**	**R1**	**R6**	**R5**	**R4**	**R3**	**R2**	**R1**	**2V**	**4V**	**6V**	**10V**	**2V**	**5V**	**7V**	**10V**
(Eurovent certification speeds)		(L)	(M)	(H)			(Max)	(L)	(M)	(H)			(Max)	(L)	(M)	(H)	(Max)	(L)	(M)	(H)	(Max)
Air flow	l/s	59	69	96	109	125	138	59	69	96	109	125	138	43	58	73	102	43	65	81	102
	m³/h	214	248	346	393	449	497	214	248	346	393	449	497	153	210	261	368	153	234	292	368
Available static pressure	Pa	0	0	0	0	0	0	0	0	0	0	0	0	0	0	0	0	0	0	0	0
Cooling mode, two pipes*																					
Total cooling capacity	kW	1.20	1.36	1.77	1.93	2.10	2.22	1.39	1.58	2.09	2.31	2.53	2.71	0.89	1.18	1.42	1.85	1.02	1.50	1.82	2.19
Sensible cooling capacity	kW	0.96	1.10	1.45	1.60	1.76	1.88	1.06	1.22	1.64	1.82	2.03	2.19	0.71	0.95	1.15	1.52	0.77	1.15	1.41	1.73
Water flow rate	l/s	0.06	0.06	0.08	0.09	0.10	0.11	0.07	0.08	0.10	0.11	0.12	0.13	0.04	0.06	0.07	0.09	0.05	0.07	0.09	0.11
	l/h	210	230	300	330	360	380	240	270	360	400	440	470	150	200	240	320	170	260	310	380
Water pressure drop	kPa	15	19	31	36	41	45	11	15	26	30	35	40	8	15	21	33	6	13	20	28
Water content	l	0.4						0.5						0.4				0.5			
Heating mode, two pipes**																					
Heating capacity	kW	1.69	1.92	2.51	2.76	3.03	3.23	1.86	2.13	2.85	3.16	3.51	3.78	1.25	1.66	2.01	2.64	1.36	2.02	2.46	3.00
Cooling mode, four pipes*																					
Total cooling capacity	kW							1.05	1.19	1.56	1.71	1.87	1.99					0.78	1.14	1.37	1.63
Sensible cooling capacity	kW							0.90	1.02	1.35	1.49	1.65	1.77					0.66	0.97	1.18	1.42
Water flow rate	l/s				NA			0.05	0.06	0.08	0.08	0.09	0.09			NA		0.04	0.06	0.07	0.08
	l/h							180	210	270	290	320	340					130	200	240	280
Water pressure drop	kPa							4	6	10	11	14	15					2	5	7	10
Water content	l							0.3										0.3			
Heating mode, four pipes***																					
Heating capacity	kW							1.87	2.11	2.70	2.94	3.17	3.34					1.40	2.02	2.40	2.82
Water flow rate	l/s				NA			0.04	0.05	0.07	0.07	0.08	0.08			NA		0.03	0.05	0.06	0.07
	l/h							160	190	240	260	280	290					120	180	210	250
Water pressure drop	kPa							5	6	9	11	12	13					3	5	7	10
Water content	l							0.2										0.2			
Electric heater		230V ±10% - 1ph						230V ±10% - 1ph						230V ±10% - 1ph				230V ±10% - 1ph			
Maximum capacity	W	1000						1000						1000				1000			
Current drawn	A	4.6						4.6						4.6				4.6			
Sound levels																					
Sound power level (global)	dB(A)	38	41	48	51	54	57	38	41	48	51	54	57	32	37	39	48	32	38	41	48
Electrical data, motor																					
Power input	W	28	31	45	54	65	80	28	31	45	54	65	80	3	5	7	13	3	5	9	13
Current drawn	A	0.14	0.17	0.20	0.23	0.28	0.35	0.14	0.17	0.20	0.23	0.28	0.35	0.05	0.06	0.08	0.14	0.05	0.06	0.10	0.14
FCEER [energy class] - 2 pipes		43	[E]					50	[E]					264	[A]			309	[A]		
FCCOP [energy class]		60	[E]					67	[E]					376	[A]			416	[A]		
FCEER [energy class] - 4 pipes								32	[E]									235	[A]		
FCCOP [energy class]								67	[E]									422	[A]		

Fan speed: L = Low, M = Medium, H = High

* Eurovent conditions: Entering air temperature = 27°C db/47% rh – entering water temperature = 7°C, water temperature difference = 5 K.
** Eurovent conditions: Entering air temperature = 20°C, entering water temperature = 50°C, same water flow rate as in cooling.
*** Eurovent conditions: Entering air temperature = 20°C, entering water temperature = 70°C, water temperature difference = 10 K.

Eurovent certified data

Physical and electrical data at Eurovent conditions

42NL - Sizes 2 and 3

With G1 filter - without plenum

42NL		325						335						329				339			
Fan speed		**R6**	**R5**	**R4**	**R3**	**R2**	**R1**	**R6**	**R5**	**R4**	**R3**	**R2**	**R1**	**2V**	**4V**	**6V**	**10V**	**2V**	**4V**	**6V**	**10V**
(Eurovent certification speeds)		(L)	(M)	(H)			(Max)	(L)	(M)	(H)			(Max)	(L)	(M)	(H)	(Max)	(L)	(M)	(H)	(Max)
Air flow	l/s	84	94	124	144	154	168	84	94	124	144	154	168	55	88	120	165	55	88	120	165
	m^3/h	302	338	447	517	555	606	302	338	447	517	555	606	198	318	431	594	198	318	431	594
Available static pressure	Pa	0	0	0	0	0	0	0	0	0	0	0	0	0	0	0	0	0	0	0	0
Cooling mode, two pipes*																					
Total cooling capacity	kW	1.47	1.60	1.97	2.19	2.29	2.43	1.80	1.99	2.54	2.88	3.04	3.26	1.06	1.53	1.92	2.40	1.22	1.89	2.46	3.22
Sensible cooling capacity	kW	1.25	1.37	1.71	1.92	2.03	2.16	1.42	1.58	2.04	2.32	2.47	2.66	0.88	1.31	1.67	2.13	0.96	1.50	1.97	2.62
Water flow rate	l/s	0.07	0.08	0.09	0.11	0.11	0.12	0.09	0.09	0.12	0.14	0.14	0.16	0.05	0.07	0.09	0.11	0.06	0.09	0.12	0.15
	l/h	250	280	340	380	390	420	310	340	440	490	520	560	180	260	330	410	210	320	420	550
Water pressure drop	kPa	10	11	17	20	22	25	11	13	21	27	29	33	5	10	16	24	5	12	20	32
Water content	l	0.7						0.9						0.7				0.9			
Heating mode, two pipes**																					
Heating capacity	kW	2.25	2.46	3.04	3.36	3.51	3.71	2.60	2.89	3.68	4.14	4.37	4.67	1.58	2.35	2.95	3.67	1.76	2.73	3.56	4.61
Cooling mode, four pipes*																					
Total cooling capacity	kW							1.79	1.96	2.42	2.68	2.82	2.99					1.27	1.87	2.36	2.95
Sensible cooling capacity	kW							1.41	1.55	1.95	2.18	2.30	2.46					0.98	1.47	1.89	2.43
Water flow rate	l/s				NA			0.09	0.09	0.12	0.13	0.13	0.14			NA		0.06	0.09	0.11	0.14
	l/h							310	340	420	460	480	510					220	320	400	510
Water pressure drop	kPa							15	18	26	31	34	37					8	16	25	37
Water content	l							0.6										0.598			
Heating mode, four pipes***																					
Heating capacity	kW							2.78	3.03	3.66	3.98	4.13	4.32					1.95	2.90	3.58	4.27
Water flow rate	l/s				NA			0.07	0.08	0.09	0.10	0.10	0.11			NA		0.05	0.07	0.09	0.11
	l/h							240	270	320	350	360	380					170	250	310	380
Water pressure drop	kPa							12	14	20	23	25	27					7	13	19	26
Water content	l							0.3										0.3			
Electric heater		230V ±10% - 1ph						230V ±10% - 1ph						230V ±10% - 1ph				230V ±10% - 1ph			
Maximum capacity	W	1600						1600						1600				1600			
Current drawn	A	7.3						7.3						7.3				7.3			
Sound levels																					
Sound power level (global)	dB(A)	43	46	54	57	59	61	43	46	54	57	59	61	37	46	53	61	37	46	53	61
Electrical data, motor																					
Power input	W	38	45	62	74	86	99	38	45	62	74	86	99	4	10	20	49	4	10	20	49
Current drawn	A	0.16	0.20	0.27	0.32	0.37	0.44	0.16	0.20	0.27	0.32	0.37	0.44	0.06	0.10	0.17	0.39	0.06	0.10	0.17	0.39
FCEER [energy class] - 2 pipes		37	[E]					46	[E]					188	[A]			225	[A]		
FCCOP [energy class]		57	[E]					67	[E]					292	[A]			332	[A]		
FCEER [energy class] - 4 pipes								36	[E]									228	[A]		
FCCOP [energy class]								70	[D]									360	[A]		

Fan speed: L = Low, M = Medium, H = High

* Eurovent conditions: Entering air temperature = 27°C db/47% rh – entering water temperature = 7°C, water temperature difference = 5 K.
** Eurovent conditions: Entering air temperature = 20°C, entering water temperature = 50°C, same water flow rate as in cooling.
*** Eurovent conditions: Entering air temperature = 20°C, entering water temperature = 70°C, water temperature difference = 10 K.

Eurovent certified data

Physical and electrical data at Eurovent conditions

42NL - Size 4

EUROVENT CERTIFIED PERFORMANCE
www.eurovent-certification.com

With G1 filter - without plenum

42NL		425						435					
Fan speed		**R6**	**R5**	**R4**	**R3**	**R2**	**R1**	**R6**	**R5**	**R4**	**R3**	**R2**	**R1**
(Eurovent certification speeds)		(L)	(M)	(H)			(Max)	(L)	(M)	(H)			(Max)
Air flow	l/s	129	149	209	234	267	301	129	149	209	234	267	301
	m^3/h	464	537	751	842	960	1085	464	537	751	842	960	1085
Available static pressure	Pa	0	0	0	0	0	0	0	0	0	0	0	0
Cooling mode, two pipes*													
Total cooling capacity	kW	2.43	2.75	3.54	3.83	4.14	4.43	2.76	3.20	4.36	4.79	5.29	5.76
Sensible cooling capacity	kW	1.99	2.27	2.98	3.25	3.57	3.86	2.18	2.52	3.46	3.83	4.27	4.70
Water flow rate	l/s	0.12	0.13	0.17	0.18	0.20	0.21	0.13	0.15	0.21	0.23	0.25	0.28
	l/h	420	470	610	660	710	760	470	550	750	820	910	990
Water pressure drop	kPa	14	18	27	31	36	40	16	21	36	43	51	59
Water content	l	1.0						1.3					
Heating mode, two pipes**													
Heating capacity	kW	3.44	3.95	5.30	5.81	6.38	6.91	3.96	4.58	6.34	7.06	7.93	8.80
Cooling mode, four pipes*													
Total cooling capacity	kW							2.52	2.84	3.69	4.00	4.37	4.72
Sensible cooling capacity	kW							2.05	2.33	3.08	3.37	3.72	4.07
Water flow rate	l/s				NA			0.12	0.14	0.18	0.19	0.21	0.23
	l/h							430	490	630	690	750	810
Water pressure drop	kPa							19	24	38	43	50	58
Water content	l							0.9					
Heating mode, four pipes***													
Heating capacity	kW							3.62	4.20	5.71	6.27	6.90	7.46
Water flow rate	l/s				NA			0.09	0.10	0.14	0.15	0.17	0.18
	l/h							320	370	500	550	610	660
Water pressure drop	kPa							22	29	50	59	70	80
Water content	l							0.5					
Electric heater		230V ±10% - 1ph						230V ±10% - 1ph					
Maximum capacity	W	2000						2000					
Current drawn	A	9.1						9.1					
Sound levels													
Sound power level (global)	dB(A)	45	48	55	58	60	63	45	48	55	58	60	63
Electrical data, motor													
Power input	W	57	69	98	113	129	157	57	69	98	113	129	157
Current drawn	A	0.25	0.30	0.43	0.49	0.57	0.69	0.25	0.30	0.43	0.49	0.57	0.69
FCEER [energy class] - 2 pipes		41	[E]					47	[E]				
FCCOP [energy class]		59	[E]					68	[E]				
FCEER [energy class] - 4 pipes								35	[E]				
FCCOP [energy class]								62	[E]				

Fan speed: L = Low, M = Medium, H = High

* Eurovent conditions: Entering air temperature = 27°C db/47% rh – entering water temperature = 7°C, water temperature difference = 5 K.
** Eurovent conditions: Entering air temperature = 20°C, entering water temperature = 50°C, same water flow rate as in cooling.
*** Eurovent conditions: Entering air temperature = 20°C, entering water temperature = 70°C, water temperature difference = 10 K.

Eurovent certified data

Physical and electrical data at Eurovent conditions

42NL - Size 4

With G1 filter - without plenum

42NL		429						439					
Fan speed		**2V**	**3.5V**	**4V**	**6V**	**8V**	**10V**	**2V**	**3.5V**	**4V**	**6V**	**8V**	**10V**
(Eurovent certification speeds)		(L)	(M)	(H)			(Max)	(L)	(M)	(H)			(Max)
Air flow	l/s	67	110	123	169	206	226	67	111	123	169	206	226
	m³/h	240	397	444	610	743	814	240	398	444	610	743	814
Available static pressure	Pa	0	0	0	0	0	0	0	0	0	0	0	0
Cooling mode, two pipes*													
Total cooling capacity	kW	1.34	2.12	2.34	3.04	3.52	3.74	1.37	2.37	2.65	3.62	4.32	4.66
Sensible cooling capacity	kW	1.09	1.73	1.91	2.52	2.96	3.17	1.10	1.87	2.08	2.86	3.43	3.71
Water flow rate	l/s	0.06	0.10	0.11	0.14	0.17	0.18	0.06	0.11	0.13	0.17	0.21	0.22
	l/h	230	360	400	520	600	640	230	400	450	620	740	800
Water pressure drop	kPa	4	11	13	21	27	30	4	11	14	27	36	41
Water content	l	1.0						1.3					
Heating mode, two pipes**													
Heating capacity	kW	1.76	3.05	3.29	4.43	5.26	5.65	2.00	3.51	3.78	5.20	6.28	6.84
Cooling mode, four pipes*													
Total cooling capacity	kW							1.41	2.20	2.43	3.15	3.66	3.91
Sensible cooling capacity	kW							1.13	1.78	1.97	2.59	3.05	3.28
Water flow rate	l/s				NA			0.07	0.11	0.12	0.15	0.18	0.19
	l/h							240	380	420	540	630	670
Water pressure drop	kPa							6	15	18	29	37	42
Water content	l							0.9					
Heating mode, four pipes***													
Heating capacity	kW							1.73	3.05	3.46	4.75	5.66	6.10
Water flow rate	l/s							0.04	0.08	0.08	0.12	0.14	0.15
	l/h				NA			150	270	300	420	500	540
Water pressure drop	kPa							6	17	21	36	49	56
Water content	l							0.5					
Electric heater		230V ±10% - 1ph						230V ±10% - 1ph					
Maximum capacity	W	1600						1600					
Current drawn	A	7.3						7.3					
Sound levels													
Sound power level (global)	dB(A)	38	49	52	60	65	67	38	49	52	60	65	67
Electrical data, motor													
Power input	W	6	15	18	42	78	99	6	15	18	42	78	99
Current drawn	A	0.07	0.15	0.18	0.38	0.65	0.80	0.07	0.15	0.18	0.38	0.65	0.80
FCEER [energy class] - 2 pipes		175	[B]					186	[A]				
FCCOP [energy class]		244	[B]					279	[A]				
FCEER [energy class] - 4 pipes								183	[B]				
FCCOP [energy class]								243	[B]				

Fan speed: L = Low, M = Medium, H = High

* Eurovent conditions: Entering air temperature = 27°C db/47% rh – entering water temperature = 7°C, water temperature difference = 5 K.
** Eurovent conditions: Entering air temperature = 20°C, entering water temperature = 50°C, same water flow rate as in cooling.
*** Eurovent conditions: Entering air temperature = 20°C, entering water temperature = 70°C, water temperature difference = 10 K.

Eurovent certified data

Physical and electrical data at Eurovent conditions

42NL - Size 5

EUROVENT CERTIFIED PERFORMANCE
www.eurovent-certification.com

With G1 filter - without plenum

42NL		525						535						545					
Fan speed		**R6**	**R5**	**R4**	**R3**	**R2**	**R1**	**R6**	**R5**	**R4**	**R3**	**R2**	**R1**	**R6**	**R5**	**R4**	**R3**	**R2**	**R1**
(Eurovent certification speeds)		(L)	(M)	(H)			(Max)	(L)		(M)	(H)		(Max)	(L)		(M)	(H)		(Max)
Air flow	l/s	150	170	233	275	313	359	150	170	233	275	313	359	150	170	233	275	313	359
	m³/h	540	612	840	991	1127	1291	540	612	840	991	1127	1291	540	612	840	991	1127	1291
Available static pressure	Pa	0	0	0	0	0	0	0	0	0	0	0	0	0	0	0	0	0	0
Cooling mode, two pipes*																			
Total cooling capacity	kW	2.76	3.05	3.89	4.36	4.75	5.18	3.21	3.62	4.79	5.45	5.96	6.49						
Sensible cooling capacity	kW	2.28	2.53	3.28	3.72	4.10	4.52	2.53	2.86	3.82	4.39	4.86	5.37						
Water flow rate	l/s	0.13	0.14	0.19	0.21	0.23	0.25	0.15	0.17	0.23	0.26	0.28	0.31				NA		
	l/h	470	520	670	750	820	890	550	620	820	940	1020	1120						
Water pressure drop	kPa	16	19	30	37	43	50	20	26	43	53	62	72						
Water content	l	1.4						1.8											
Heating mode, two pipes**																			
Heating capacity	kW	4.01	4.48	5.84	6.60	7.19	7.80	4.60	5.21	7.01	8.02	8.81	9.61						
Cooling mode, four pipes*																			
Total cooling capacity	kW							2.77	3.08	3.97	4.46	4.86	5.29	2.99	3.35	4.43	5.06	5.59	6.16
Sensible cooling capacity	kW							2.27	2.53	3.30	3.75	4.13	4.55	2.42	2.72	3.62	4.17	4.64	5.18
Water flow rate	l/s				NA			0.13	0.15	0.19	0.21	0.23	0.25	0.14	0.16	0.21	0.24	0.27	0.29
	l/h							480	530	680	770	830	910	510	580	760	870	960	1060
Water pressure drop	kPa							17	21	33	41	47	55	17	22	37	46	55	65
Water content	l							1.1						1.4					
Heating mode, four pipes***																			
Heating capacity	kW							3.45	3.79	4.77	5.30	5.71	6.14	4.10	4.59	5.94	6.62	7.10	7.54
Water flow rate	l/s				NA			0.08	0.09	0.12	0.13	0.14	0.15	0.10	0.11	0.14	0.16	0.17	0.18
	l/h							300	330	420	470	500	540	360	400	520	580	620	660
Water pressure drop	kPa							6	7	11	13	15	17	8	9	15	18	20	22
Water content	l							0.5						0.6					
Electric heater		230V ±10% - 1ph						230V ±10% - 1ph						230V ±10% - 1ph					
Maximum capacity	W	2000						2000						2000					
Current drawn	A	9.1						9.1						9.1					
Sound levels																			
Sound power level (global)	dB(A)	42	46	53	57	59	62	42	46	53	57	59	62	42	46	53	57	59	62
Electrical data, motor																			
Power input	W	58	67	99	118	137	170	58	67	99	118	137	170	58	67	99	118	137	170
Current drawn	A	0.26	0.30	0.43	0.52	0.60	0.74	0.26	0.30	0.43	0.52	0.60	0.74	0.26	0.30	0.43	0.52	0.60	0.74
FCEER [energy class] - 2 pipes		46	[E]					52	[E]										
FCCOP [energy class]		68	[E]					75	[D]										
FCEER [energy class] - 4 pipes								36	[E]					39	[E]				
FCCOP [energy class]								54	[E]					66	[E]				

Fan speed: L = Low, M = Medium, H = High

* Eurovent conditions: Entering air temperature = 27°C db/47% rh – entering water temperature = 7°C, water temperature difference = 5 K.
** Eurovent conditions: Entering air temperature = 20°C, entering water temperature = 50°C, same water flow rate as in cooling.
*** Eurovent conditions: Entering air temperature = 20°C, entering water temperature = 70°C, water temperature difference = 10 K.

Eurovent certified data

Physical and electrical data at Eurovent conditions

42NL - Size 5

With G1 filter - without plenum

42NL		529						539						549					
Fan speed		**2V**	**4V**	**5V**	**6V**	**8V**	**10V**	**2V**	**4V**	**5.5V**	**6V**	**8V**	**10V**	**2V**	**4V**	**5.5V**	**6V**	**8V**	**10V**
(Eurovent certification speeds)		(L)		(M)	(H)		(Max)	(L)		(M)	(H)		(Max)	(L)		(M)	(H)		(Max)
Air flow	l/s	82	141	172	188	231	255	82	141	180	188	231	255	82	141	180	188	231	255
	m^3/h	295	508	618	675	831	918	295	508	646.5	675	831	918	295	508	646.5	675	831	918
Available static pressure	Pa	0	0	0	0	0	0	0	0	0	0	0	0	0	0	0	0	0	0
Cooling mode, two pipes*																			
Total cooling capacity	kW	1.66	2.62	3.07	3.29	3.85	4.13	1.71	3.02	3.81	3.97	4.75	5.14						
Sensible cooling capacity	kW	1.34	2.16	2.55	2.75	3.25	3.51	1.37	2.38	3.01	3.14	3.78	4.12						
Water flow rate	l/s	0.08	0.13	0.15	0.16	0.18	0.20	0.08	0.14	0.18	0.19	0.23	0.24			NA			
	l/h	290	450	530	570	660	710	290	520	655	680	820	880						
Water pressure drop	kPa	6	14	20	23	30	34	6	18	28.5	31	42	48						
Water content	l	1.4						1.8											
Heating mode, two pipes**																			
Heating capacity	kW	2.24	3.79	4.52	4.88	5.79	6.25	2.32	4.31	5.50	5.74	6.94	7.55						
Cooling mode, four pipes*																			
Total cooling capacity	kW							1.61	2.63	3.23	3.35	3.94	4.23	1.68	2.82	3.53	3.67	4.39	4.76
Sensible cooling capacity	kW							1.30	2.15	2.66	2.76	3.27	3.54	1.36	2.28	2.86	2.98	3.59	3.91
Water flow rate	l/s				NA			0.08	0.13	0.15	0.16	0.19	0.20	0.08	0.13	0.17	0.18	0.21	0.23
	l/h							280	450	555	580	680	730	290	480	605	630	750	820
Water pressure drop	kPa							6	15	23	25	33	37	5	15	24	26	36	42
Water content	l							1.1						1.4					
Heating mode, four pipes***																			
Heating capacity	kW							2.10	3.28	3.96	4.09	4.74	5.05	2.18	3.86	4.82	5.01	5.89	6.31
Water flow rate	l/s				NA			0.05	0.08	0.10	0.10	0.12	0.12	0.05	0.09	0.12	0.12	0.14	0.15
	l/h							180	290	350	360	420	440	190	340	425	440	520	550
Water pressure drop	kPa							3	6	7.5	8	11	12	3	7	10.5	11	15	16
Water content	l							0.5						0.6					
Electric heater		230V ±10% - 1ph						230V ±10% - 1ph						230V ±10% - 1ph					
Maximum capacity	W	2000						2000						2000					
Current drawn	A	9.1						9.1						9.1					
Sound levels																			
Sound power level (global)	dB(A)	32	43	47	51	55	58	32	43	49	51	55	58	32	43	49	51	55	58
Electrical data, motor																			
Power input	W	4	11	18	24	43	58	4	11	21	24	43	58	4	11	21	24	43	58
Current drawn	A	0.04	0.09	0.13	0.17	0.28	0.39	0.04	0.09	0.15	0.17	0.28	0.39	0.04	0.09	0.15	0.17	0.28	0.39
FCEER [energy class] - 2 pipes		235	[A]					243	[A]										
FCCOP [energy class]		346	[A]					355	[A]										
FCEER [energy class] - 4 pipes								176	[B]					187	[A]				
FCCOP [energy class]								288	[A]					322	[A]				

Fan speed: L = Low, M = Medium, H = High

* Eurovent conditions: Entering air temperature = 27°C db/47% rh – entering water temperature = 7°C, water temperature difference = 5 K.
** Eurovent conditions: Entering air temperature = 20°C, entering water temperature = 50°C, same water flow rate as in cooling.
*** Eurovent conditions: Entering air temperature = 20°C, entering water temperature = 70°C, water temperature difference = 10 K.

Eurovent certified data

Physical and electrical data at Eurovent conditions

42NH - Sizes 2 and 3

EUROVENT CERTIFIED PERFORMANCE
www.eurovent-certification.com

With G1 filter - without plenum

42NH		225			235			229				239				279			
Fan speed		**R5**	**R2**	**R1**	**R5**	**R2**	**R1**	**2V**	**7V**	**8V**	**10V**	**2V**	**7V**	**8V**	**10V**	**2V**	**6V**	**7V**	**10V**
(Eurovent certification speeds)		(L)	(M)	(H)	(L)	(M)	(H)	(L)	(M)	(H)	(Max)	(L)	(M)	(H)	(Max)	(L)	(M)	(H)	(Max)
Air flow	l/s	31	63	76	31	63	76	26	64	70	81	26	64	70	81	33	85	97	124
	m^3/h	111	228	272	111	228	272	95	229	253	292	95	229	253	292	118	305	349	446
Available static pressure	Pa	12	50	71	12	50	71	9	50	61	81	9	50	61	81	7	50	65	107
Cooling mode, two pipes*																			
Total cooling capacity	kW	0.66	1.27	1.47	0.75	1.47	1.71	0.58	1.28	1.39	1.56	0.65	1.48	1.61	1.82	0.80	1.89	2.11	2.52
Sensible cooling capacity	kW	0.52	1.02	1.19	0.57	1.13	1.32	0.45	1.02	1.12	1.26	0.49	1.13	1.24	1.41	0.60	1.47	1.65	2.02
Water flow rate	l/s	0.03	0.06	0.07	0.04	0.07	0.08	0.03	0.06	0.07	0.08	0.03	0.07	0.08	0.09	0.04	0.09	0.10	0.12
	l/h	110	220	250	130	250	290	100	220	240	270	110	250	280	310	140	320	360	430
Water pressure drop	kPa	5	17	22	3	13	17	4	17	20	25	3	13	15	19	4	21	26	35
Water content	l	0.4			0.5			0.4				0.5				0.5			
Heating mode, two pipes**																			
Heating capacity	kW	0.93	1.78	2.07	1.00	1.97	2.31	0.80	1.79	1.95	2.20	0.87	1.98	2.17	2.46	1.06	2.56	2.87	3.49
Cooling mode, four pipes*																			
Total cooling capacity	kW				0.58	1.11	1.29					0.51	1.12	1.22	1.37	0.64	1.45	1.61	1.89
Sensible cooling capacity	kW				0.49	0.95	1.10					0.43	0.95	1.04	1.17	0.54	1.25	1.40	1.68
Water flow rate	l/s		NA		0.03	0.05	0.06		NA			0.03	0.05	0.06	0.06	0.03	0.07	0.08	0.09
	l/h				100	190	220					90	190	210	230	110	250	280	330
Water pressure drop	kPa				2	5	7					1	5	6	7	2	8	10	14
Water content	l				0.3							0.3				0.3			
Heating mode, four pipes***																			
Heating capacity	kW				1.06	1.97	2.27					0.92	1.98	2.15	2.40	1.17	2.54	2.78	3.21
Water flow rate	l/s		NA		0.03	0.05	0.06		NA			0.02	0.05	0.05	0.06	0.03	0.06	0.07	0.08
	l/h				90	170	200					80	170	190	210	100	220	240	280
Water pressure drop	kPa				2	5	7					1	5	6	7	2	8	10	12
Water content	l				0.2							0.2				0.2			
Electric heater		230V ±10% - 1ph			230V ±10% - 1ph			230V ±10% - 1ph				230V ±10% - 1ph				230V ±10% - 1ph			
Maximum capacity	W	1000			1000			1000				1000				1000			
Current drawn	A	4.6			4.6			4.6				4.6				4.6			
Sound levels																			
Sound power level (return and radiated)	dB(A)	33	45	48	33	45	48	36	49	52	56	36	49	52	56	32	52	55	61
Sound power level (supply)	dB(A)	31	47	50	31	47	50	37	51	53	58	37	51	53	58	32	55	58	64
Electrical data, motor																			
Power input	W	13	39	44	13	39	44	3	18	22	33	3	18	22	33	4	25	36	70
Current drawn	A	0.13	0.23	0.24	0.13	0.23	0.24	0.05	0.22	0.28	0.39	0.05	0.22	0.28	0.39	0.06	0.29	0.40	0.75
FCEER [energy class] - 2 pipes		40	[D]		45	[C]		98	[A]			112	[A]			100	[A]		
FCCOP [energy class]		57	[C]		62	[B]		144	[A]			157	[A]			141	[A]		
FCEER [energy class] - 4 pipes					35	[D]						86	[A]			78	[B]		
FCCOP [energy class]					64	[B]						162	[A]			147	[A]		

Fan speed: L = Low, M = Medium, H = High

* Eurovent conditions: Entering air temperature = 27°C db/47% rh – entering water temperature = 7°C, water temperature difference = 5 K.
** Eurovent conditions: Entering air temperature = 20°C, entering water temperature = 50°C, same water flow rate as in cooling.
*** Eurovent conditions: Entering air temperature = 20°C, entering water temperature = 70°C, water temperature difference = 10 K.

Eurovent certified data

Physical and electrical data at Eurovent conditions

42NH - Sizes 2 and 3

With G1 filter - without plenum

42NH		325					335					329				339			
Fan speed		**R5**	**R4**	**R3**	**R2**	**R1**	**R5**	**R4**	**R3**	**R2**	**R1**	**2V**	**4.3V**	**6V**	**10V**	**2V**	**4.3V**	**6V**	**10V**
(Eurovent certification speeds)			(L)	(M)	(H)	(Max)		(L)	(M)	(H)	(Max)	(L)	(M)	(H)	(Max)	(L)	(M)	(H)	(Max)
Air flow	l/s	55	79	102	131	160	55	79	102	131	160	69	123	154	198	68	121	153	197
	m^3/h	197	284	366	471	577	197	284	366	471	577	247	443	556	714	245	437	552	709
Available static pressure	Pa	14	30	50	83	124	14	30	50	83	124	15	50	78	128	15	50	78	128
Cooling mode, two pipes*																			
Total cooling capacity	kW	1.05	1.40	1.70	2.04	2.35	1.22	1.70	2.14	2.66	3.14	1.26	1.96	2.30	2.70	1.49	2.50	3.03	3.68
Sensible cooling capacity	kW	0.87	1.19	1.46	1.78	2.09	0.95	1.34	1.70	2.14	2.56	1.06	1.70	2.03	2.44	1.17	2.00	2.46	3.03
Water flow rate	l/s	0.05	0.07	0.08	0.10	0.11	0.06	0.08	0.10	0.13	0.15	0.06	0.09	0.11	0.13	0.07	0.12	0.14	0.18
	l/h	180	240	290	350	400	210	290	370	460	540	220	340	390	460	260	430	520	630
Water pressure drop	kPa	5	9	13	18	23	5	9	15	23	31	7	17	22	30	7	20	29	41
Water content	l	0.7					0.9					0.7				0.9			
Heating mode, two pipes**																			
Heating capacity	kW	1.57	2.14	2.62	3.15	3.61	1.75	2.46	3.10	3.84	4.51	1.91	3.10	3.52	4.09	2.15	3.69	4.36	5.21
Cooling mode, four pipes*																			
Total cooling capacity	kW						1.26	1.71	2.09	2.51	2.89					1.51	2.37	2.80	3.31
Sensible cooling capacity	kW						0.97	1.34	1.66	2.03	2.38					1.17	1.90	2.29	2.77
Water flow rate	l/s			NA			0.06	0.08	0.10	0.12	0.14		NA			0.07	0.11	0.13	0.16
	l/h						220	290	360	430	500					260	410	480	570
Water pressure drop	kPa						7	14	20	28	35					11	25	33	45
Water content	l						0.6									0.6			
Heating mode, four pipes***																			
Heating capacity	kW						1.94	2.64	3.21	3.77	4.21					2.34	3.56	4.11	4.71
Water flow rate	l/s			NA			0.05	0.06	0.08	0.09	0.10		NA			0.06	0.09	0.10	0.11
	l/h						170	230	280	330	370					210	310	360	410
Water pressure drop	kPa						7	11	16	21	26					9	19	25	31
Water content	l						0.3									0.3			
Electric heater		230V ±10% - 1ph					230V ±10% - 1ph					230V ±10% - 1ph				230V ±10% - 1ph			
Maximum capacity	W	1600					1600					1600				1600			
Current drawn	A	7.3					7.3					7.3				7.3			
Sound levels																			
Sound power level (return and radiated)	dB(A)	42	45	49	55	60	42	45	49	55	60	43	57	61	65	43	57	61	65
Sound power level (supply)	dB(A)	46	48	54	60	66	46	48	54	60	66	44	59	65	70	44	59	65	70
Electrical data, motor																			
Power input	W	109	126	146	168	190	109	126	146	168	190	10	46	89	172	10	46	89	172
Current drawn	A	0.50	0.57	0.65	0.75	0.88	0.50	0.57	0.65	0.75	0.88	0.11	0.57	0.79	1.35	0.11	0.57	0.79	1.35
FCEER [energy class] - 2 pipes		11	[E]				14	[E]				61	[B]			76	[B]		
FCCOP [energy class]		17	[E]				20	[E]				100	[A]			115	[A]		
FCEER [energy class] - 4 pipes							14	[E]								74	[B]		
FCCOP [energy class]							22	[E]								119	[A]		

Fan speed: L = Low, M = Medium, H = High

* Eurovent conditions: Entering air temperature = 27°C db/47% rh – entering water temperature = 7°C, water temperature difference = 5 K.
** Eurovent conditions: Entering air temperature = 20°C, entering water temperature = 50°C, same water flow rate as in cooling.
*** Eurovent conditions: Entering air temperature = 20°C, entering water temperature = 70°C, water temperature difference = 10 K.

Eurovent certified data

Physical and electrical data at Eurovent conditions

42NH - Size 4

With G1 filter - without plenum

42NH		425					435				
Fan speed		**R5**	**R4**	**R3**	**R2**	**R1**	**R5**	**R4**	**R3**	**R2**	**R1**
(Eurovent certification speeds)		(L)	(M)	(H)		(Max)	(L)	(M)	(H)		(Max)
Air flow	l/s	104	149	181	196	205	104	149	181	196	205
	m^3/h	375	537	650	706	739	375	537	650	706	739
Available static pressure	Pa	24	50	73	86	95	24	50	73	86	95
Cooling mode, two pipes*											
Total cooling capacity	kW	2.02	2.75	3.19	3.39	3.50	2.21	3.20	3.84	4.13	4.30
Sensible cooling capacity	kW	1.65	2.26	2.66	2.84	2.94	1.76	2.52	3.03	3.27	3.41
Water flow rate	l/s	0.10	0.13	0.15	0.16	0.17	0.11	0.15	0.18	0.20	0.21
	l/h	350	470	550	580	600	380	550	660	710	740
Water pressure drop	kPa	10	18	23	25	27	10	21	29	33	35
Water content	l	1.0					1.3				
Heating mode, two pipes**											
Heating capacity	kW	2.79	3.95	4.69	5.04	5.23	3.19	4.58	5.53	5.98	6.25
Cooling mode, four pipes*											
Total cooling capacity	kW						2.10	2.84	3.31	3.52	3.64
Sensible cooling capacity	kW						1.70	2.33	2.74	2.93	3.04
Water flow rate	l/s			NA			0.10	0.14	0.16	0.17	0.18
	l/h						360	490	570	610	630
Water pressure drop	kPa						13	24	31	35	37
Water content	l						0.9				
Heating mode, four pipes***											
Heating capacity	kW						2.89	4.20	5.03	5.42	5.64
Water flow rate	l/s			NA			0.07	0.10	0.12	0.13	0.14
	l/h						250	370	440	480	500
Water pressure drop	kPa						15	29	40	45	49
Water content	l						0.5				
Electric heater		230V ±10% - 1ph					230V ±10% - 1ph				
Maximum capacity	W	2000					2000				
Current drawn	A	9.1					9.1				
Sound levels											
Sound power level (return and radiated)	dB(A)	44	51	55	58	59	44	51	55	58	59
Sound power level (supply)	dB(A)	47	54	58	60	61	47	54	58	60	61
Electrical data, motor											
Power input	W	83	91	97	104	119	83	91	97	104	119
Current drawn	A	0.43	0.51	0.62	0.67	0.72	0.43	0.51	0.62	0.67	0.72
FCEER [energy class] - 2 pipes		27	[D]				30	[D]			
FCCOP [energy class]		37	[D]				43	[C]			
FCEER [energy class] - 4 pipes							28	[D]			
FCCOP [energy class]							39	[D]			

Fan speed: L = Low, M = Medium, H = High

* Eurovent conditions: Entering air temperature = 27°C db/47% rh – entering water temperature = 7°C, water temperature difference = 5 K.
** Eurovent conditions: Entering air temperature = 20°C, entering water temperature = 50°C, same water flow rate as in cooling.
*** Eurovent conditions: Entering air temperature = 20°C, entering water temperature = 70°C, water temperature difference = 10 K.

Eurovent certified data

Physical and electrical data at Eurovent conditions

42NH - Size 4

With G1 filter - without plenum

42NH		429					439				
Fan speed		**2V**	**4V**	**6V**	**7V**	**10V**	**2V**	**4V**	**6V**	**7V**	**10V**
(Eurovent certification speeds)		(L)	(M)	(H)		(Max)	(L)	(M)	(H)		(Max)
Air flow	l/s	81	148	197	218	231	81	148	197	218	231
	m^3/h	293	533	709	786	832	293	533	709	786	832
Available static pressure	Pa	15	50	88	109	122	15	50	88	109	122
Cooling mode, two pipes*											
Total cooling capacity	kW	1.61	2.73	3.40	3.65	3.79	1.69	3.17	4.15	4.53	4.74
Sensible cooling capacity	kW	1.31	2.25	2.85	3.09	3.22	1.36	2.50	3.28	3.60	3.78
Water flow rate	l/s	0.08	0.13	0.16	0.18	0.18	0.08	0.15	0.20	0.22	0.23
	l/h	280	470	580	630	650	290	550	710	780	810
Water pressure drop	kPa	6	17	26	29	31	6	21	33	39	42
Water content	l	1.0					1.3				
Heating mode, two pipes**											
Heating capacity	kW	2.17	3.92	5.05	5.50	5.75	2.47	4.55	6.01	6.62	6.97
Cooling mode, four pipes*											
Total cooling capacity	kW						1.69	2.83	3.53	3.81	3.96
Sensible cooling capacity	kW						1.35	2.31	2.94	3.19	3.33
Water flow rate	l/s			NA			0.08	0.14	0.17	0.18	0.19
	l/h						290	490	610	650	680
Water pressure drop	kPa						9	24	35	40	43
Water content	l						0.9				
Heating mode, four pipes***											
Heating capacity	kW						2.19	4.17	5.44	5.93	6.21
Water flow rate	l/s			NA			0.05	0.10	0.13	0.14	0.15
	l/h						190	370	480	520	550
Water pressure drop	kPa						9	29	46	53	58
Water content	l						0.5				
Electric heater		230V ±10% - 1ph					230V ±10% - 1ph				
Maximum capacity	W	1600					1600				
Current drawn	A	7.3					7.3				
Sound levels											
Sound power level (return and radiated)	dB(A)	43	55	61	63	65	43	55	61	63	65
Sound power level (supply)	dB(A)	44	57	65	67	70	44	57	65	67	70
Electrical data, motor											
Power input	W	10.5	43	99	140	172	10.5	43	99	140	172
Current drawn	A	0.12	0.43	0.98	1.26	1.31	0.12	0.43	0.98	1.26	1.31
FCEER [energy class] - 2 pipes		82	[B]				91	[A]			
FCCOP [energy class]		119	[A]				137	[A]			
FCEER [energy class] - 4 pipes							86	[A]			
FCCOP [energy class]							124	[A]			

Fan speed: L = Low, M = Medium, H = High

* Eurovent conditions: Entering air temperature = 27°C db/47% rh – entering water temperature = 7°C, water temperature difference = 5 K.
** Eurovent conditions: Entering air temperature = 20°C, entering water temperature = 50°C, same water flow rate as in cooling.
*** Eurovent conditions: Entering air temperature = 20°C, entering water temperature = 70°C, water temperature difference = 10 K.

Eurovent certified data

Physical and electrical data at Eurovent conditions

42NH - Size 5

With G1 filter - without plenum

42NH		525					535					545				
Fan speed		**R5**	**R4**	**R3**	**R2**	**R1**	**R5**	**R4**	**R3**	**R2**	**R1**	**R5**	**R4**	**R3**	**R2**	**R1**
(Eurovent certification speeds)		(L)	(M)	(H)		(Max)	(L)	(M)	(H)		(Max)	(L)	(M)	(H)		(Max)
Air flow	l/s	213	240	257	268	279	213	240	257	268	279	213	240	257	268	279
	m^3/h	767	863	924	964	1004	767	863	924	964	1004	767	863	925	964	1004
Available static pressure	Pa	40	50	57	62	68	40	50	57	62	68	40	50	57	62	68
Cooling mode, two pipes*																
Total cooling capacity	kW	3.63	3.96	4.16	4.28	4.40	4.44	4.90	5.17	5.34	5.50					
Sensible cooling capacity	kW	3.05	3.35	3.53	3.64	3.76	3.52	3.91	4.15	4.29	4.44					
Water flow rate	l/s	0.17	0.19	0.20	0.21	0.21	0.21	0.23	0.25	0.26	0.26			NA		
	l/h	620	680	710	740	760	760	840	890	920	950					
Water pressure drop	kPa	28	31	34	36	38	37	45	49	52	54					
Water content	l	1.4					1.8									
Heating mode, two pipes**																
Heating capacity	kW	5.43	5.96	6.28	6.47	6.66	6.46	7.17	7.60	7.86	8.11					
Cooling mode, four pipes*																
Total cooling capacity	kW						3.71	4.05	4.25	4.38	4.50	4.10	4.52	4.79	4.95	5.12
Sensible cooling capacity	kW						3.07	3.37	3.56	3.68	3.79	3.34	3.71	3.93	4.08	4.22
Water flow rate	l/s			NA			0.18	0.19	0.20	0.21	0.21	0.19	0.22	0.23	0.24	0.24
	l/h						640	700	730	750	770	700	780	820	850	880
Water pressure drop	kPa						30	35	38	40	42	32	38	42	45	47
Water content	l						1.1					1.4				
Heating mode, four pipes***																
Heating capacity	kW						4.48	4.86	5.08	5.22	5.34	5.55	6.05	6.34	6.52	6.67
Water flow rate	l/s			NA			0.11	0.12	0.13	0.13	0.13	0.14	0.15	0.16	0.16	0.16
	l/h						390	430	450	460	470	490	530	560	570	590
Water pressure drop	kPa						10	11	12	13	13	13	15	16	17	18
Water content	l						0.5					0.6				
Electric heater		230V ±10% - 1ph					230V ±10% - 1ph					230V ±10% - 1ph				
Maximum capacity	W	2000					2000					2000				
Current drawn	A	9.1					9.1					9.1				
Sound levels																
Sound power level (return and radiated)	dB(A)	53	55	57	58	58	53	55	57	58	58	53	55	57	58	58
Sound power level (supply)	dB(A)	55	57	59	60	61	55	57	59	60	61	55	57	59	60	61
Electrical data, motor																
Power input	W	105	113	117	124	134	105	113	117	124	134	105	113	117	124	134
Current drawn	A	0.59	0.64	0.67	0.71	0.76	0.59	0.64	0.67	0.71	0.76	0.59	0.64	0.67	0.71	0.76
FCEER [energy class] - 2 pipes		35	[D]				43	[C]								
FCCOP [energy class]		52	[C]				62	[B]								
FCEER [energy class] - 4 pipes							36	[D]				39	[D]			
FCCOP [energy class]							43	[C]				53	[C]			

Fan speed: L = Low, M = Medium, H = High

* Eurovent conditions: Entering air temperature = 27°C db/47% rh – entering water temperature = 7°C, water temperature difference = 5 K.
** Eurovent conditions: Entering air temperature = 20°C, entering water temperature = 50°C, same water flow rate as in cooling.
*** Eurovent conditions: Entering air temperature = 20°C, entering water temperature = 70°C, water temperature difference = 10 K.

Eurovent certified data

Physical and electrical data at Eurovent conditions

42NH - Size 5

With G1 filter - without plenum

42NH		529					539					549				
Fan speed		**2V**	**5V**	**6V**	**8V**	**10V**	**2V**	**5V**	**6V**	**8V**	**10V**	**2V**	**5V**	**6V**	**8V**	**10V**
(Eurovent certification speeds)		(L)	(M)	(H)		(Max)	(L)	(M)	(H)		(Max)	(L)	(M)	(H)		(Max)
Air flow	l/s	96	213	244	307	347	96	213	244	307	347	96	213	244	307	347
	m^3/h	346	765	878	1105	1249	346	765	878	1105	1249	346	765	878	1105	1249
Available static pressure	Pa	10	50	66	104	133	10	50	66	104	133	10	50	66	104	133
Cooling mode, two pipes*																
Total cooling capacity	kW	1.90	3.63	4.01	4.69	5.08	2.03	4.43	4.97	5.88	6.35					
Sensible cooling capacity	kW	1.55	3.04	3.39	4.04	4.42	1.62	3.52	3.97	4.79	5.24					
Water flow rate	l/s	0.09	0.17	0.19	0.23	0.24	0.10	0.21	0.24	0.28	0.30			NA		
	l/h	330	620	690	810	870	350	760	850	1010	1090					
Water pressure drop	kPa	8	27	32	42	48	8	37	46	61	69					
Water content	l	1.4					1.8									
Heating mode, two pipes**																
Heating capacity	kW	2.62	5.42	6.05	7.10	7.65	2.81	6.45	7.28	8.70	9.42					
Cooling mode, four pipes*																
Total cooling capacity	kW						1.86	3.70	4.10	4.80	5.19	1.96	4.09	4.59	5.51	6.02
Sensible cooling capacity	kW						1.51	3.06	3.42	4.07	4.45	1.58	3.33	3.76	4.57	5.04
Water flow rate	l/s			NA			0.09	0.18	0.19	0.23	0.25	0.09	0.19	0.22	0.26	0.29
	l/h						320	640	700	820	890	340	700	790	950	1030
Water pressure drop	kPa						8	30	35	46	53	7	32	39	53	62
Water content	l						1.1					1.4				
Heating mode, four pipes***																
Heating capacity	kW						2.40	4.47	4.91	5.65	6.04	2.61	5.54	6.13	7.03	7.44
Water flow rate	l/s			NA			0.06	0.11	0.12	0.14	0.15	0.06	0.14	0.15	0.17	0.18
	l/h						210	390	430	500	530	230	490	540	620	650
Water pressure drop	kPa						3	10	11	15	16	4	13	16	20	22
Water content	l						0.5					0.6				
Electric heater		230V ±10% - 1ph					230V ±10% - 1ph					230V ±10% - 1ph				
Maximum capacity	W	2000					2000					2000				
Current drawn	A	9.1					9.1					9.1				
Sound levels																
Sound power level (return and radiated)	dB(A)	35	53	58	63	67	35	53	58	63	67	35	53	58	63	67
Sound power level (supply)	dB(A)	36	57	61	66	70	36	57	61	66	70	36	57	61	66	70
Electrical data, motor																
Power input	W	9	52	78	146	212	9	52	78	146	212	9	52	78	146	212
Current drawn	A	0.12	0.67	0.95	1.58	1.88	0.12	0.67	0.95	1.58	1.88	0.12	0.67	0.95	1.58	1.88
FCEER [energy class] - 2 pipes		100	[A]				114	[A]								
FCCOP [energy class]		150	[A]				170	[A]								
FCEER [energy class] - 4 pipes							100	[A]				108	[A]			
FCCOP [energy class]							131	[A]				152	[A]			

Fan speed: L = Low, M = Medium, H = High

* Eurovent conditions: Entering air temperature = 27°C db/47% rh – entering water temperature = 7°C, water temperature difference = 5 K.
** Eurovent conditions: Entering air temperature = 20°C, entering water temperature = 50°C, same water flow rate as in cooling.
*** Eurovent conditions: Entering air temperature = 20°C, entering water temperature = 70°C, water temperature difference = 10 K.

Eurovent certified data

Physical and electrical data at Eurovent conditions

42NH - Size 6 and 7

EUROVENT CERTIFIED PERFORMANCE
www.eurovent-certification.com

With G1 filter - without plenum

42NH		635					645					639				649			
Fan speed		**R5**	**R4**	**R3**	**R2**	**R1**	**R5**	**R4**	**R3**	**R2**	**R1**	**2V**	**6V**	**7V**	**10V**	**2V**	**7V**	**8V**	**10V**
(Eurovent certification speeds)			(L)	(M)	(H)	(Max)		(L)	(M)	(H)	(Max)	(L)	(M)	(H)	(Max)	(L)	(M)	(H)	(Max)
Air flow	l/s	200	298	397	460	499	200	298	397	460	499	102	269	303	389	111	327	364	425
	m^3/h	720	1072	1428	1657	1796	720	1072	1428	1657	1796	368	967	1089	1400	399	1176	1310	1531
Available static pressure	Pa	13	28	50	67	79	13	28	50	67	79	7	50	63	105	6	50	62	85
Cooling mode, two pipes*																			
Total cooling capacity	kW	4.22	6.04	7.55	8.33	8.77	4.77	7.03	8.86	9.79	10.28	2.18	5.52	6.11	7.45	2.45	7.62	8.31	9.29
Sensible cooling capacity	kW	3.36	4.85	6.18	6.92	7.36	3.63	5.37	6.90	7.75	8.23	1.74	4.42	4.91	6.08	1.93	5.84	6.42	7.29
Water flow rate	l/s	0.20	0.29	0.36	0.40	0.42	0.23	0.34	0.42	0.47	0.49	0.11	0.26	0.29	0.36	0.12	0.36	0.40	0.44
	l/h	730	1040	1300	1430	1510	820	1210	1520	1680	1770	380	950	1050	1280	420	1310	1430	1600
Water pressure drop	kPa	11	23	34	40	44	11	24	38	44	48	3	19	24	33	4	28	34	40
Water content	l	1.5					2					1.5				2			
Heating mode, two pipes**																			
Heating capacity	kW	6.09	8.83	11.29	12.66	13.40	6.57	9.69	12.45	13.95	14.75	3.14	8.04	8.95	11.11	3.47	10.55	11.59	13.15
Cooling mode, four pipes*																			
Total cooling capacity	kW						3.99	5.61	6.87	7.47	7.82					2.09	5.68	6.16	6.78
Sensible cooling capacity	kW						3.24	4.63	5.80	6.43	6.80					1.70	4.69	5.12	5.72
Water flow rate	l/s			NA			0.19	0.27	0.33	0.36	0.37			NA		0.10	0.27	0.29	0.33
	l/h						690	960	1180	1280	1340					360	980	1060	1170
Water pressure drop	kPa						10	20	29	34	36					3	20	24	29
Water content	l						1.3									1.3			
Heating mode, four pipes***																			
Heating capacity	kW						5.67	7.82	9.27	9.88	10.17					2.93	7.90	8.48	9.18
Water flow rate	l/s			NA			0.14	0.19	0.23	0.24	0.25			NA		0.07	0.19	0.21	0.23
	l/h						500	690	810	870	890					260	690	750	810
Water pressure drop	kPa						7	12	17	19	20					2	13	14	16
Water content	l						0.7									0.7			
Electric heater		230V ±10% - 1ph					230V ±10% - 1ph					230V ±10% - 1ph				230V ±10% - 1ph			
Maximum capacity	W	3200					3200					3200				3200			
Current drawn	A	14.6					14.6					14.6				14.6			
Sound levels																			
Sound power level (return and radiated)	dB(A)	50	56	58	61	62	50	56	58	61	62	39	62	64	70	39	64	67	70
Sound power level (supply)	dB(A)	50	59	62	65	66	50	59	62	65	66	45	58	61	68	45	61	64	68
Electrical data, motor																			
Power input	W	185	217	225	242	286	185	217	225	242	286	9	76	106	222	9	111	153	233
Current drawn	A	0.96	1.11	1.28	1.38	1.55	0.96	1.11	1.28	1.38	1.55	0.09	0.71	1.02	2.01	0.09	0.71	1.02	2.01
FCEER [energy class] - 2 pipes		30	[D]				35	[D]				100	[A]			92	[A]		
FCCOP [energy class]		44	[C]				48	[C]				152	[A]			135	[A]		
FCEER [energy class] - 4 pipes							28	[D]								72	[B]		
FCCOP [energy class]							38	[D]								107	[A]		

Fan speed: L = Low, M = Medium, H = High

* Eurovent conditions: Entering air temperature = 27°C db/47% rh – entering water temperature = 7°C, water temperature difference = 5 K.
** Eurovent conditions: Entering air temperature = 20°C, entering water temperature = 50°C, same water flow rate as in cooling.
*** Eurovent conditions: Entering air temperature = 20°C, entering water temperature = 70°C, water temperature difference = 10 K.

Eurovent certified data

Physical and electrical data at Eurovent conditions

42NH - Sizes 6 and 7

With G1 filter - without plenum

42NH		735					745					739				749			
Fan speed		**R5**	**R4**	**R3**	**R2**	**R1**	**R5**	**R4**	**R3**	**R2**	**R1**	**2V**	**7V**	**8V**	**10V**	**2V**	**7V**	**8V**	**10V**
(Eurovent certification speeds)				(L)	(M)	(H)			(L)	(M)	(H)	(L)	(M)	(H)	(Max)	(L)	(M)	(H)	(Max)
Air flow	l/s	148	218	374	533	600	148	218	374	533	600	147	441	477	529	147	441	477	529
	m^3/h	534	785	1346	1918	2161	534	785	1346	1918	2161	530	1586	1717	1906	530	1586	1717	1906
Available static pressure	Pa	4	8	25	50	63	4	8	25	50	63	6	50	59	72	6	50	59	72
Cooling mode, two pipes*																			
Total cooling capacity	kW	3.37	4.90	7.92	10.30	11.14	3.61	5.33	8.84	11.68	12.65	3.34	9.00	9.54	10.26	3.58	10.10	10.76	11.61
Sensible cooling capacity	kW	2.60	3.79	6.22	8.31	9.09	2.73	4.01	6.71	9.09	9.97	2.59	7.14	7.62	8.27	2.71	7.75	8.31	9.04
Water flow rate	l/s	0.16	0.23	0.38	0.49	0.53	0.17	0.26	0.42	0.56	0.60	0.16	0.43	0.46	0.49	0.17	0.48	0.51	0.55
	l/h	580	840	1360	1770	1910	620	920	1520	2010	2170	570	1550	1640	1760	620	1740	1850	1990
Water pressure drop	kPa	8	17	42	66	75	7	15	41	66	75	8	52	57	65	7	51	57	65
Water content	l	2					2.6					2				2.6			
Heating mode, two pipes**																			
Heating capacity	kW	4.52	6.48	10.68	14.63	16.15	4.59	6.72	11.38	15.82	17.52	4.48	12.38	13.29	14.54	4.56	13.29	14.32	15.72
Cooling mode, four pipes*																			
Total cooling capacity	kW	2.98	4.19	6.58	8.61	9.36	3.52	5.18	8.41	10.80	11.56	2.96	7.48	7.94	8.57	3.49	9.52	10.06	10.76
Sensible cooling capacity	kW	2.40	3.41	5.45	7.29	7.99	2.68	3.93	6.47	8.59	9.33	2.39	6.25	6.67	7.25	2.65	7.42	7.90	8.55
Water flow rate	l/s	0.14	0.20	0.31	0.41	0.45	0.17	0.25	0.40	0.52	0.55	0.14	0.36	0.38	0.41	0.17	0.46	0.48	0.51
	l/h	510	720	1130	1480	1610	600	890	1440	1860	1990	510	1280	1360	1470	600	1640	1730	1850
Water pressure drop	kPa	8	16	35	56	65	9	19	47	72	81	8	44	49	56	9	58	64	72
Water content	l	1.3					1.7					1.3				1.7			
Heating mode, four pipes***																			
Heating capacity	kW	4.17	5.96	9.64	12.76	13.87	4.76	7.22	12.05	15.70	16.91	4.14	11.03	11.75	12.70	4.72	13.73	14.56	15.63
Water flow rate	l/s	0.10	0.14	0.24	0.31	0.34	0.12	0.18	0.29	0.38	0.41	0.10	0.27	0.29	0.31	0.11	0.34	0.36	0.38
	l/h	370	520	850	1120	1220	420	630	1060	1380	1490	360	970	1030	1120	410	1210	1280	1370
Water pressure drop	kPa	5	9	22	36	41	6	11	28	45	51	5	28	31	36	5	35	39	44
Water content	l	0.7					0.9					0.7				0.9			
Electric heater		230V ±10% - 1ph					230V ±10% - 1ph					230V ±10% - 1ph				230V ±10% - 1ph			
Maximum capacity	W	3200					3200					3000				3000			
Current drawn	A	14.6					14.6					13.7				13.7			
Sound levels																			
Sound power level (return and radiated)	dB(A)	41	48	57	63	64	41	48	57	63	64	46	60	62	64	46	60	62	64
Sound power level (supply)	dB(A)	42	48	58	66	68	42	48	58	66	68	45	61	63	66	45	61	63	66
Electrical data, motor																			
Power input	W	174	227	282	316	321	174	227	282	316	321	10	137	177	240	10	137	177	240
Current drawn	A	0.84	1.08	1.40	1.74	1.86	0.84	1.08	1.40	1.74	1.86	0.11	1.11	1.38	1.85	0.11	1.11	1.38	1.85
FCEER [energy class] - 2 pipes		30	[D]				34	[D]				95	[A]			104	[A]		
FCCOP [energy class]		41	[C]				44	[C]				138	[A]			144	[A]		
FCEER [energy class] - 4 pipes		25	[E]				32	[D]				81	[B]			100	[A]		
FCCOP [energy class]		36	[D]				45	[C]				125	[A]			149	[A]		

Fan speed: L = Low, M = Medium, H = High

* Eurovent conditions: Entering air temperature = 27°C db/47% rh – entering water temperature = 7°C, water temperature difference = 5 K.
** Eurovent conditions: Entering air temperature = 20°C, entering water temperature = 50°C, same water flow rate as in cooling.
*** Eurovent conditions: Entering air temperature = 20°C, entering water temperature = 70°C, water temperature difference = 10 K.

Eurovent certified data

Options Specifications

Electric heater (option for 2-pipe coil)

Electric heater-resistance wire type

- Supply voltage: 230 V - 1 ph - 50 Hz
- Heater size and capacity per unit (+5% ; -10%):

Electrical Heater Capacity	Low	Medium	High	Very High
42NH/NL 2-5	1 x 500 W	1 x 800 W	1 x 1000 W	NA
42NH/NL 2-9	1 x 500 W	1 x 800 W	1 x 1000 W	NA
42NH/NL 3-5	1 x 500 W	1 x 800 W	1 x 1000 W	1 x 1600 W
42NH/NL 3-9	1 x 500 W	1 x 800 W	1 x 1000 W	1 x 1600 W
42NH/NL 4-5	2 x 500 W	2 x 800 W	2 x 1000 W	NA
42NH/NL 4-9	1 x 500 W	1 x 800 W	1 x 1000 W	1 x 1600 W
42NH/NL 5-5	2 x 500 W	2 x 800 W	2 x 1000 W	NA
42NH/NL 5-9	2 x 500 W	2 x 800 W	2 x 1000 W	NA
42NH 6-5	2 x 500 W	2 x 800 W	2 x 1000 W	2 x 1600 W
42NH 6-9	2 x 500 W	2 x 800 W	2 x 1000 W	2 x 1600 W
42NH 7-5	2 x 500 W	2 x 800 W	2 x 1000 W	2 x 1600 W
42NH 7-9	2 x 500 W	3 x 500 W	3 x 800 W	3 x 1000 W

- The heater is protected with a dual safety device:
  a) Self-holding automatically reset integrated safety thermostat
  b) Destructive thermofuse link
- Available for 2-pipe coil only.

WARNING: Minimum air flow must be maintained to avoid damaging the electric heaters.

A minimum control signal of 3V is selected by default with Electronic Carrier controller (NTC / WTC). To prevent low airflow with 42NL range, plenum cannot be chosen as an option.

Fresh air controller (option)

- Constant volume fresh air controller

The fan coil can be fitted with a constant fresh air flow controller adjustable from 15 m³/h to 180 m³/h to allow control of the introduction of fresh air and of the air change rate.

The fresh air supply can be located in the air supply plenum, in the air return plenum or in the side of the base unit casing for compact design.

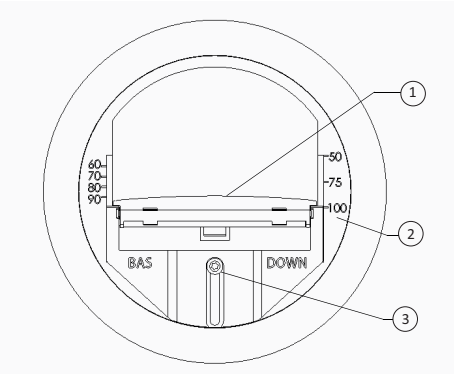

Example: Range 50-100 m³/h

1 Air Damper
2 Fresh airflow damper position setting (in m³/h)
3 Airflow adjustment screw

The fresh air controller may be modified on site by relocating the damper (adjustable screw). Three ranges of air-controller are provided: 15 to 50m³/h, 60 to 100m³/h and 110 to 180m³/h.

IMPORTANT: If an optional return air temperature sensor is provided, the constant fresh air flow rate must not exceed 50% of the unit supply air flow rate at minimum speed.

NOTE: To operate correctly,the fresh air flow controller requires a differential pressure in the range of 60 Pa to 210 Pa.

- Variable volume fresh air controller

The unit can be equipped with an optional variable fresh air flow controller from 0-55 l/s (0-200 m³/h). It is connected to the numeric Carrier controller and can regulate the fresh air intake in two ways:

- Either using a fixed rate set by the installer that can be reconfigured as required
- Or based on the CO_2 level; in this case it is connected to a CO_2 sensor via the Carrier numeric controller.

NOTE: With the variable fresh air flow controller the upstream pressure in the fresh air duct must be 180 Pa.

Options Specifications

Valves and actuators (option)

NOTE: The motor valve assembly is normally closed.

■ Valve actuators

A wide choice of actuators is available with two or four-way valve bodies (three-way with integral bypass) to offer the right solution for any controller type and customer requirement, from on/off to proportional types, with either 230 V or 24 V power supply:

- On/off 230 V actuator
- On/off 24 V actuator
- Floating 3-point 230 V actuator
- Floating 3-point 24 V actuator
- Modulating 0-10 V/24 V actuator

When combined with LEC motors and WTC or NTC controllers, floating 3-point 230-V actuators are recommended to increase energy savings and enhance comfort.

NOTE: 24V power supply actuators are not compatible with Carrier controllers (Thermostats A/B/C/D, WTC & NTC).

■ Standard two-way valve body and three-way valve body (with integral bypass)

Features of the 1/2" two-way and three-way valves for 42NL/NH sizes 2 to 5

- 1/2" male BSP connection for union nuts
- Straight valve body with arrow indicating direction of flow embossed on valve body
- Nominal size DN15 for 1/2" valve
- Nominal pressure: PN 16 bar

Features of the 3/4" two-way and three-way valves for 42NH sizes 6 and 7

- 3/4" male BSP connection for union nuts
- Straight valve body with arrow indicating direction of flow embossed on valve body
- Nominal size DN20 for 3/4" valve
- Nominal pressure: PN 16 bar

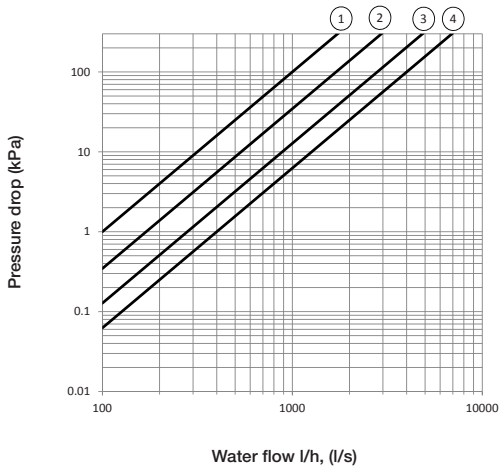

Legend
1 1/2" - ON/OFF valve 42NL/NH - Size 2 Kvs = 1
2 1/2" - ON/OFF valve 42NL/NH - Sizes 3, 4, 5 Kvs = 1.7
3 3/4" - ON/OFF valve 42NL/NH - Size 6 Kvs = 2.8
4 3/4" - ON/OFF valve 42NL/NH - Size 7 Kvs = 4

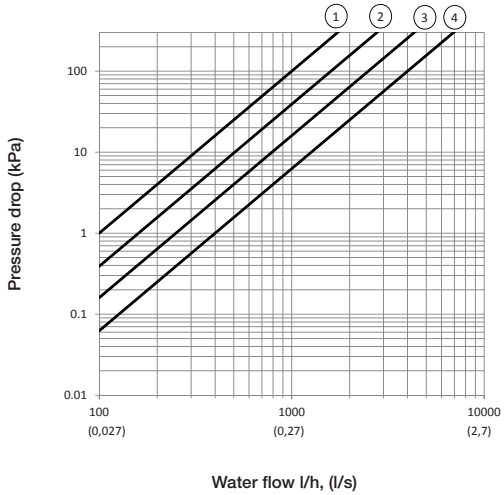

Legend
1 1/2" - ON/OFF valve 42NL/NH - Size 2 Kvs = 1
2 1/2" - ON/OFF valve 42NL/NH - Sizes 3, 4, 5 Kvs = 1.7
3 3/4" - ON/OFF valve 42NL/NH - Size 6 Kvs = 2.8
4 3/4" - ON/OFF valve 42NL/NH - Size 7 Kvs = 4

■ Two way balancing valve body

New two-way valves with embedded balancing function technology are available as an option with 42NH and 42NL units. The Carrier two-way valve with balancing function combines the functionality of a dynamic balancing valve and a control valve in one product. They are available as an option with Carrier NTC and WTC controllers.

The dynamic balancing function maintains a constant differential pressure over the control valve.

The control valve regulates the flow by means of a variable orifice which is controlled by the actuator.

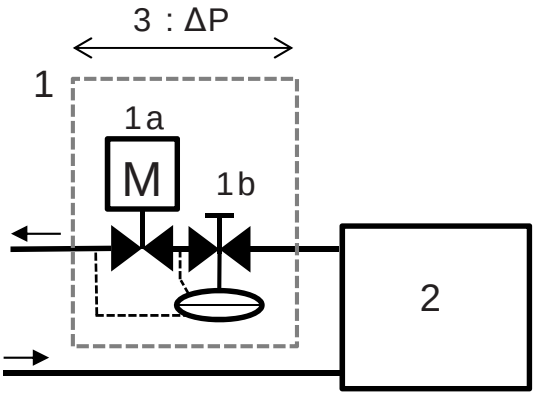

Legend

1. Two-way valve with balancing function
   1a. Valve actuator for waterflow control
   1b. Differential pressure controller & balancing feature
2. Fan-coil unit
3. Minimum operating pressure drop at nominal waterflow:
   15 kPa for sizes 2 & 3
   20 kPa for sizes 4 & 5

The constant differential pressure across the control valve ensures accurate control and maximizes valve authority, independently of the pressure conditions in the system.

Advantages versus standard two-way valve

- Improved and reliable commissioning. The water flow can be set and controlled on site.
- Higher energy efficiency due to optimal waterflow and maximized valve authority.
- Enhanced comfort thanks to stable and precise ambient temperature control.

Features of the 3/4" two-way valves with balancing function for 42NL/NH sizes 2 and 3

- 3/4" male BSP connection for union nuts
- Straight valve body with arrow indicating direction of flow embossed on valve body
- Nominal size DN 15 for 3/4" valve
- Nominal pressure: PN 16 bar
- Minimum operating differential pressure = 15 kPa at nominal flow.

Features of the 1" two-way valves with balancing function for 42NL/NH sizes 3 and 4

- 1" male BSP connection for union nuts
- Straight valve body with arrow indicating direction of flow embossed on valve body
- Nominal size DN 20 for 1" valve
- Nominal pressure: PN 16 bar
- Minimum operating differential pressure = 20 kPa at nominal flow.

As a secondary option, two pressure points can be added to the valve body in order to measure precisely the waterflow during the commissioning and the maintenance stages.

Valves and actuators (option)

■ Materials

- Pipes: MEPD-based elastomer (modified ethylene-propylene-diene)
- Braid: 304L stainless steel
- Insulation: cellular foam rubber with M1 fire rating (9 mm thick, flexible water pipes).

■ Characteristics

- Minimum bend radius (insulated pipes): 106 mm
- The flexible water pipes are designed for treated or untreated water.
- Maximum operating pressure: 16 bar
- 1/2" female flat gas connections for sizes 2, 3, 4 and 5
- 3/4" female flat gas connections for sizes 6 and 7
- Length: 1 m.

Options Specifications

Sensors (option)

■ Water sensor

A water temperature sensor can be provided as an option for NTC and WTC controllers.

- For 2-pipe coil: The sensor is installed on a cooling/ heating water pipe (for change-over function).
- For 4-pipe coil: The sensor is installed on a heating water pipe (for cold-draft function that prevents the operation of the unit when the heating network is off).

In case of fan-coil unit delivered with an electrical box, the “water sensor” option is actually a switch that will be connected to the Carrier thermostat.

NOTE:

- ***The water sensor option (switch) with electrical box is only available for 2-pipe coil without electrical heater.***
- ***A water probe can also be provided as an accessory only in order to use the cold draft function of the thermostat.***

■ Air sensor

Two air sensors, factory fitted, are available as an option for NTC and WTC controllers. They measure the air temperature at the inlet and/or at the outlet side.

■ CO_2 sensor

For indoor air quality control, a CO_2 sensor is available as an option for NTC and WTC controllers. The sensor is factory fitted at the inlet side.

Condensate pump (option)

The condensate pump option is designed to fit on the side of the unit drain pan. Electrical power supply 230V-50/60Hz.

Condensate pump discharge performances:

Table of actual discharge (l/h)				
	Total length of pipe (Ø int. 6 mm) A			
Discharge head (B)	5 m	10 m	20 m	30 m
0 m	20	19	18	17
2 m	16	15	14	13.5
4 m	11.5	11	10.5	10
6 m	-	8.5	7.5	6.5
8 m	-	6	5	4
10 m	-	4	3.5	2.5

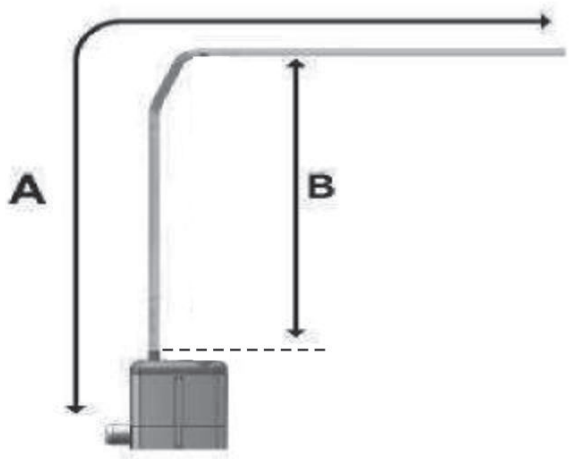

Control (Option)

The unit can be supplied with a wide range of Carrier controls. These offer functions to suit the various application requirements, summarised in the table below.

	Thermostats	NTC	WTC
Communication Protocols			
Carrier Communication Network (CCN) Aquasmart compatible		x	
BACnet MSTP			x
LON			x
Control algorithms			
On-off	x		
Proportional-integral		x	x
Carrier Energy saving algorithm		x	x
Fan control			
AC motors 3 speeds descreet	Type A&B	x	x
Automatic optimum fan speed selection	x	x	x
EC motors 3 speeds descreet	Type C&D	x	x
EC motors Variable speed		x	x
Water Valve management			
Air flow control only (no water valve)	x		
230V On-off actuators	x	x	x
230V Modulating actuators (floating 3pts)		x	x
Main functions			
Setpoint control	x	x	x
Occupied/unoccupied mode	x	x	x
Frost protection mode	x	x	x
Window / Door contact input	x	x	x
Measurement of water inlet temperature for automatic seasonal changeover (2 pipes)	Type A&C	x	x
Measurement of water inlet temperature to prevent cold-draft (4 pipes and 2 pipes + electric heater)	Type B&D	x	x
Manual changeover	x	x	x
Frost protection mode	x	x	x
Continuous ventilation within dead-band	x	x	x
Periodical ventilation within dead-band	x	x	x
On-site configuration	x	x	x
Unit grouping Master/Slave	x	x	x
Cassette Louvers control		x	x
Supply air temperature monitoring limiting		x	x
Electrical heater loadshed		x	x
Dirty filter alarm		x	x
Alarm reporting		x	x
Indoor Air Quality control (CO_2 sensor)		o	o
Demand control ventilation (DCV) (0-10V fresh air valve)		o	o
Free cooling mode			o
Presence detection			o
User interfaces			
Automatic or manual fan speed control	x	x	x
Setpoint adjustment	x	x	x
Occupancy (eco) button	x	x	o
Digital display		o	o
Remote control (infra-red)		o	o
CO_2 sensor		o	o
Luminosity sensor			o
Motion detection			o
Easy connection RJ45 jack (on wall mounted UI)			x
Light & Blinds management			
Light power modules			o
Blinds power modules			o
Control kit			
On site control kit solution			o

Legend
X Feature available as standard
O Optional
NOTE: For the features and specifications of the Carrier controllers refer to the technical documentation for each controller.
Upon special request other controller types can be factory- installed on the units (supplied by Carrier or the customer).

Product Characteristic list

Characteristic Name		Digit n° Co-dification	Value	Description	Pack.	Compatibility	
Range		1-2	42				
		3-4	NH				
			NL				
UNIT SIZE (Digits 5 - 6 - 7)	Chassis size	5	2	Chassis Size 2	Yes	Unit size availability (Digit n° 5-6-7):	
			3	Chassis Size 3			
			4	Chassis Size 4		2-pipe:	4-pipe:
			5	Chassis Size 5		NL / NH 225;235;229;239;279	NL / NH 235;239;279
			6	Chassis Size 6		NL / NH 325;335;329;339	NL / NH 335;339
			7	Chassis Size 7			
	Efficiency	6	2	Standard efficiency	Yes	NL / NH 425;435;429;439	NL / NH 435;439
			3	Medium efficiency			
			4	High efficiency		NL / NH 525;535;529;539	NL / NH 535;545;539;549
			7	Extra High efficiency		NH 635;645;639;649	NH 645;649
	Fan type	7	5	AC multispeed motor	Yes		
			9	EC low consumption motor		NH 735;745;739;749	NH 735;745;739;749
Coil hand & type		8	F	2 pipes coil Left Hand	Yes		
			G	2 pipes coil Right Hand			
			C	4 pipes coil Left Hand			
			D	4 pipes coil Right Hand			
Control		9	-	Bare wires	Yes	Valves and actuators must be selected with NTC	
			E	Electrical Box			
			K	NTC			
			L	WTC LON			
			M	WTC BACNET			
Valve body		10	-	Without valve	Yes	Balancing valves are not available for unit sizes 6xx and 7xx	
			G	2-way valve	Yes		
			H	4-way valve	Yes		
			L	2-way balancing valve	No		
			T	2-way balancing valve and pressure points	No		
Electrical heater		11	-	Without electric heater	Yes	Electrical heaters are not compatible with 42NL with plenum.	
			E	500W electric heater			
			F	800W electric heater			
			G	1000W electric heater		Highest capacity for unit size 2xx	
			H	1500W electric heater			
			J	1600W electric heater		Highest capacity for unit sizes 3xx and 4x9	
			K	2000W electric heater		Highest capacity for unit sizes 4x5 and 5xx	
			L	2400W electric heater			
			M	3000W electric heater		Highest capacity for unit sizes 7x9	
			N	3200W electric heater		Highest capacity for unit sizes 6xx and 7x5	
Valve actuator		12	-	Without actuator	Yes	24V actuators are not available with Carrier controllers 3 points floating actuators are not available with Electrical Box	
			A	230V ON/OFF actuator	Yes		
			C	230V floating actuator (3 points)	Yes		
			B	24V ON/OFF actuator	Yes		
			D	24V floating actuator (3 points)	No		
			E	24V 0-10V modulating actuator	No		
Rectangular flanges		13	-	Without rectangular flange	Yes		
			A	Outlet rectangular flange only	Yes		
			B	Inlet rectangular flange only	Yes		
			C	Inlet and outlet rectangular flanges	Yes		
Specific (options selection)		14	-	Without specific option	Yes		
			A	With specific options (factory fitted)	Yes		

Legend:

Default value for mandatory characteristic

Pack: Available with individual packaging

Specific options (can be selected if digit n°14 = A*)

Characteristic Name	Value	Description	Pack.	Compatibility
Indoor air quality	Without	Filter	Yes	Only available with rect. flanges or plenum
	G1		Yes	
	G3		Yes	
	M5		No	M5 filter only available for 42NH units with plenum
Fan speed wiring for AC motor	654	AC motor speeds arrangement: R6 = minimum speed for 42NL R5 = minimum speed for 42NH R1 = maximum speed When this option is not selected, the standard wiring for all 42NL and 42NH units is always R5-R3-R1	Yes	R6 not available for 42NH range
	653			
	652			
	651			
	643			
	642			
	641			
	632			
	631			
	621			
	543			
	542			
	541			
	532			
	531			
	521			
	432			
	431			
	421			
	321			
Packaging	Bundle	Filmed on a pallet (shrink wrap)	-	
	Individual	Individual packaging		
Inlet plenum	1_inline	1 spigot in line	No	According to unit sizes, filter and fresh air position Use selection software for more informations
	1_lat_op	1 lateral spigot opposite to coil side		
	1_lat	1 lateral spigot at coil side		
	2	2 spigots		
	2_lat	2 lateral spigots		
	3	3 spigots		
	4	4 spigots		
	5	5 spigots		
	6	6 spigots		
	7	7 spigots		
Outlet plenum	1_inline	1 spigot in line	No	According to unit sizes, filter and fresh air position Use selection software for more informations
	1_lat_op	1 lateral spigot opposite to coil side		
	1_lat	1 lateral spigot at coil side		
	2	2 spigots		
	2_lat	2 lateral spigots		
	3	3 spigots		
	4	4 spigots		
	5	5 spigots		
	6	6 spigots		
Inlet spigots diameter	DN160	Spigot diameter	No	DN160 Not available for unit sizes 6xx to 7xx
	DN200			
	DN250			DN250 Not available for unit sizes 2xx to 5xx
Outlet spigots diameter	DN160	Spigot diameter	No	DN160 Not available for unit sizes 6xx to 7xx
	DN200			
	DN250			DN250 Not available for unit sizes 2xx to 5xx
Fresh air	DN125	Without controller - spigot only	No	Motorized air damper compatible with NTC and WTC only (Position feedback is not available if WTC and CO_2 sensor are also selected)
	DN125_15_50	15 to 50 m³/h controller		
	DN125_50_100	50 to 100 m³/h controller		
	DN125_100_180	100 to 180 m³/h controller		
	Adaptor_D125	For motorized air damper (to be ordered separately)		

Legend:

Default value for mandatory characteristic

Pack: Available with individual packaging

–

* If Digit n°14 = "-" then default values are selected.

Boolean: yes or no

Product Characteristic list (Cont.)

Specific options (can be selected if digit n°14 = A*)

Characteristic Name	Value	Description	Pack.	Compatibility
Fresh air position	In_opp	At inlet side opposite to coil hand	No	According to unit sizes, filter and spigots selection Use selection software for more informations
	In_coil	At inlet side same as coil hand		
	In_line	At inlet rear side		
	Optimized	Inlet optimized: opposite to coil hand in base unit for compact design		
	Out_opp	At outlet side opposite to coil hand		
	Out_coil	At outlet side same as coil hand		
Fuse holder	boolean	Fuse holder	Yes	
Plastic cover	boolean	Plastic cover	Yes	For bare wires (without control only)
Condensate pump	boolean	Condensate pump	No	
Flexible	boolean	Flexible hoses	No	
Return air sensor	boolean	Return air temperature sensor	Yes	Compatible with NTC and WTC only
Supply air sensor	boolean	Supply air temperature sensor	Yes	Compatible with NTC and WTC only
Water temperature sensor	boolean	Water temperature sensor	Yes	According to controller and coil type
CO_2 sensor	boolean	CO_2 sensor	Yes	Compatible with NTC and WTC only

Legend:

Default value for mandatory characteristic

Pack: Available with individual packaging

–

* If Digit n°14 = "-" then default values are selected.

Boolean: yes or no

AIR TREATMENT

Functions and configurations

Modularity

With its two versions, the range is able to address all applications.

The 42NL version is optimised for simple soffit installations while the 42NH is optimised for air return and supply ducted installations.

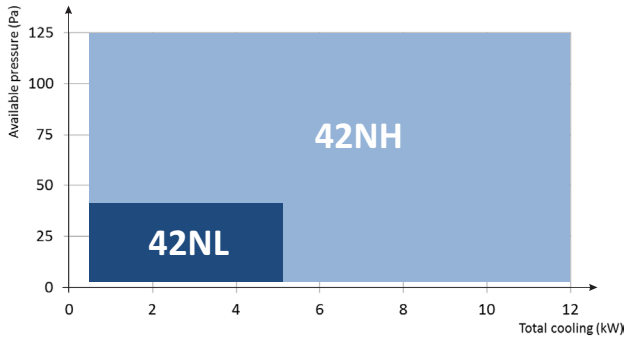

Configuration flexibility

Each of the 42NL and 42NH sizes can be provided:

- With free inlet and/or outlet
- With a rectangular flange air inlet and/or outlet (practical to connect the fan-coil unit to the air ductwork).
- With inlet and/or outlet plenums including large number of spigots diameters 160, 200 or 250 mm according to unit size.

Below picture shows all available air distribution configurations on 42NL or 42NH (size 3 for example) with spigot diameter 200 mm.

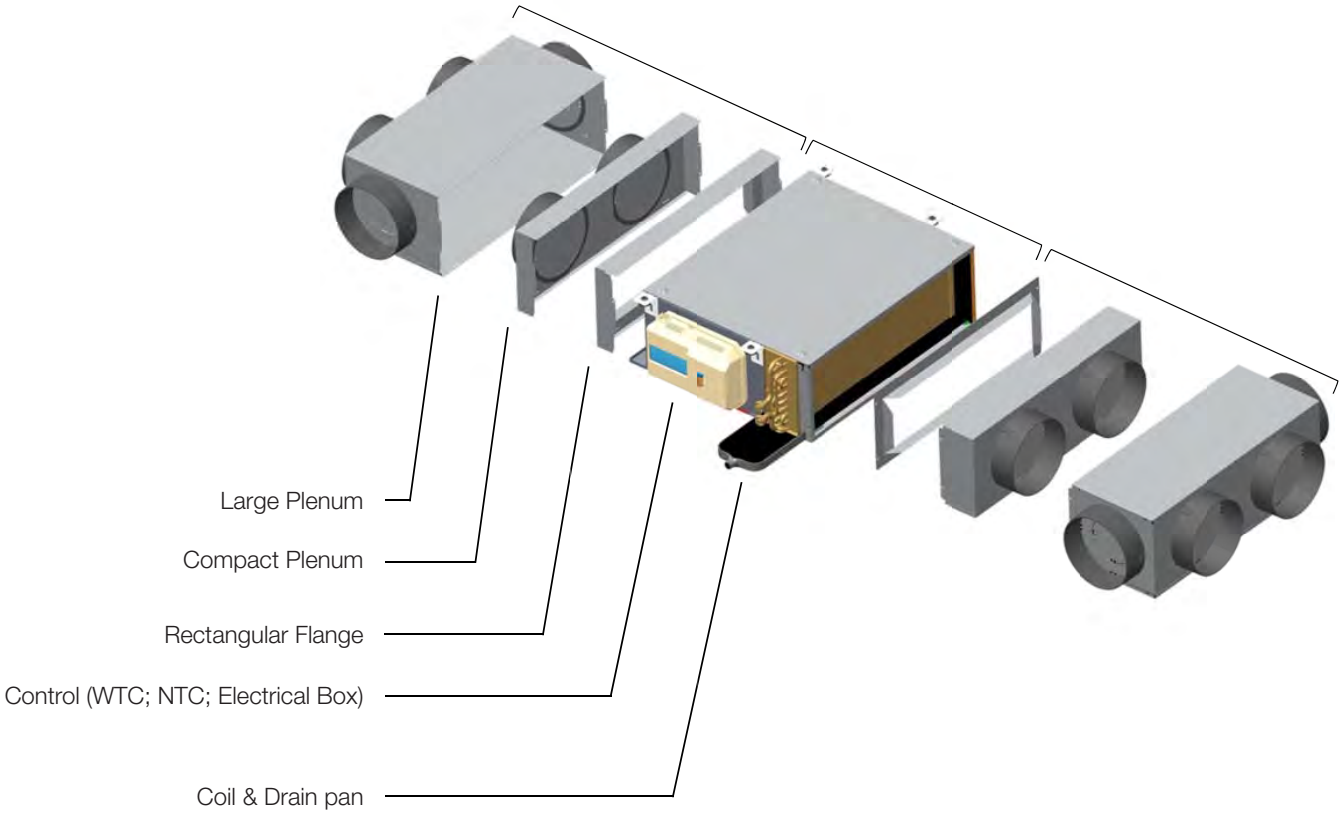

Functions and configurations

Standard spigots configuration

Large and small plenums for inlet and outlet are available for all sizes according to the drawings below:

	42NH & 42NL Size 2xx	42NH & 42NL Size 3xx	42NH & 42NL Size 4xx
LARGE INLET OR OUTLET	4x DN 160 3x DN 160	4x DN 160 4x DN 260	5x DN 160 4x DN 200
COMPACT INLET OR OUTLET	2x DN 160 1x DN 160	2x DN 160 2x DN 200	3x DN 160 2x DN 200
	MIN. SPIGOTS. = 1x160 or 1x200 (2x160 and 1x200 for 42NH279)	**MIN. SPIGOTS. = 2x160 or 1x200** (2x160 and 2x200 for 42NL range)	**MIN. SPIGOTS. = 3x160 or 2x200**

	42NH & 42NL Size 5xx	42NH & 42NL Size 6xx	42NH & 42NL Size 7xx
LARGE INLET OR OUTLET	6x DN 160 6x DN 200	5x DN 200 4x DN 200	6x DN 200 5x DN 250
COMPACT INLET OR OUTLET	4x DN 160 3x DN 120	3x DN 200 2x DN 250	4x DN 200 3x DN 250
LIMITS (*)	**MIN. SPIGOTS. =3x160 or 2x200** (24x160 and 3x200 for 42NL range)	**MIN. SPIGOTS. = 3x200 or 2x200**	**MIN. SPIGOTS. = 4x200 or 3x250**

(*) = Minimum number of spigots required to ensure sufficient available static pressure and fan reliability

NOTE:

- Electrical heater are not available for 42NL Units when plenum are selected (due to minimum airflow requirement)
- Non-standard configurations not listed above can be provided upon special request. Contact your local Carrier representative.

Standard Configuration with inlet and outlet rectangular flanges:

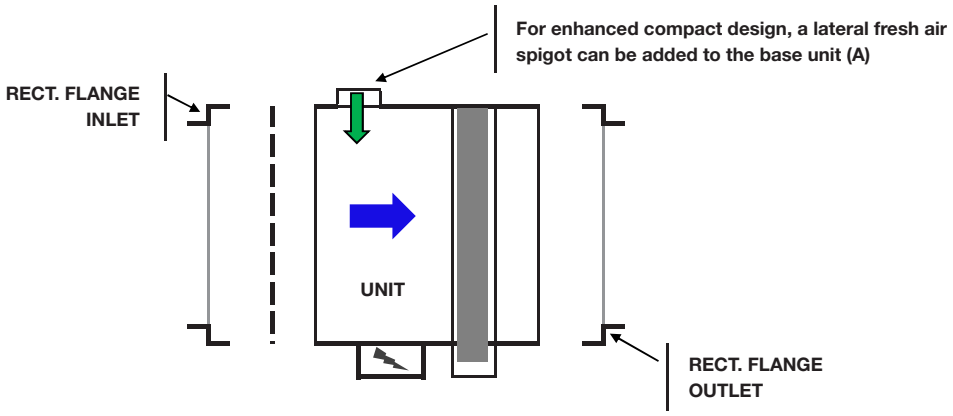

Standard Configuration with spigots without fresh air:

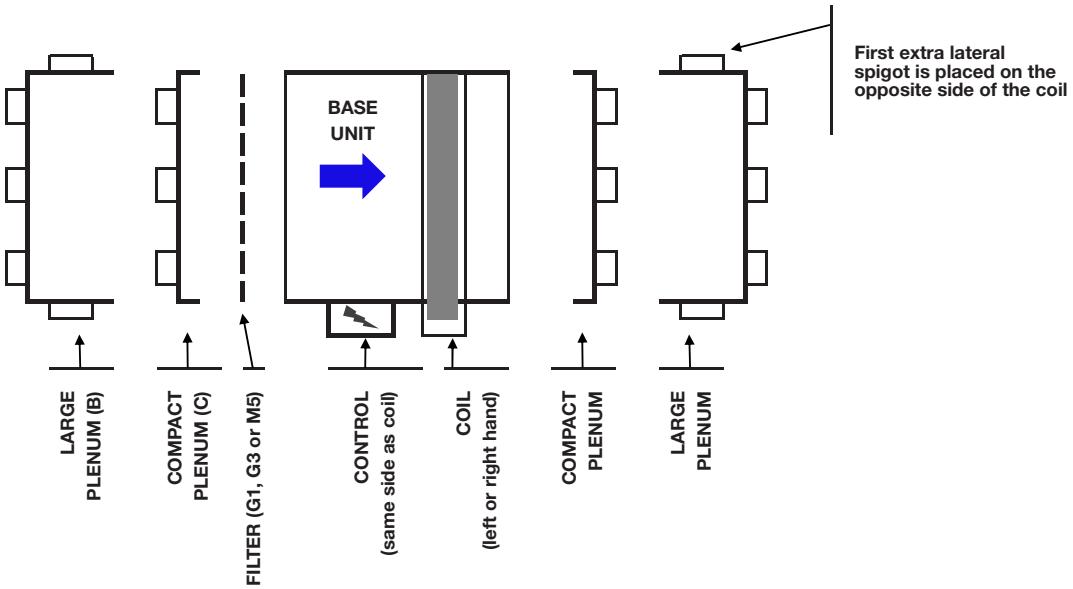

Standard Configuration with fresh air inlet possibilities:

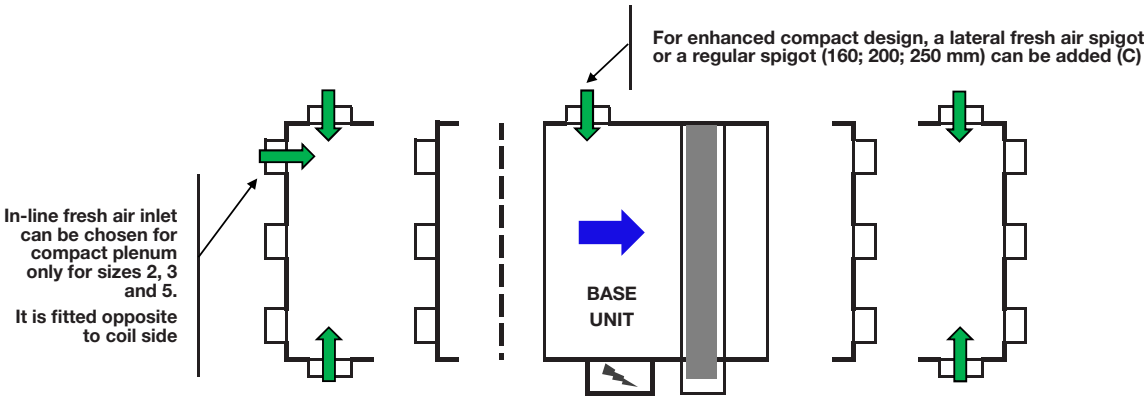

Air flow direction

Fresh air inlet

Functions and configurations

Standard spigots configuration (Continued)

Useful configurations are displayed below:

U-shaped

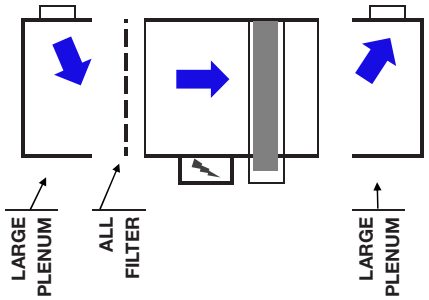

L-shaped

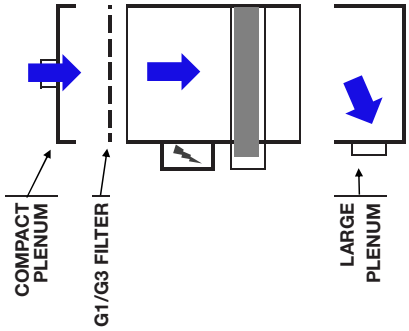

T-shaped

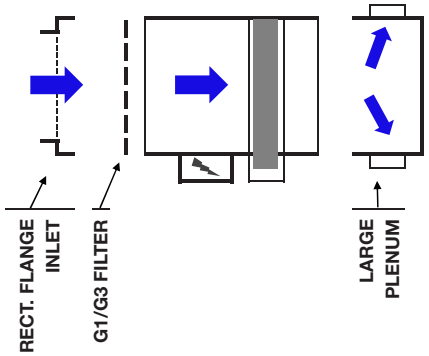

H-shaped or L-shaped

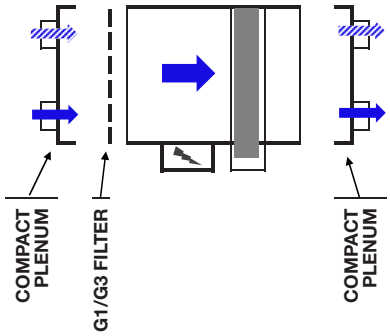

Without filter configurations (Ultra Compact Design)

U-shaped

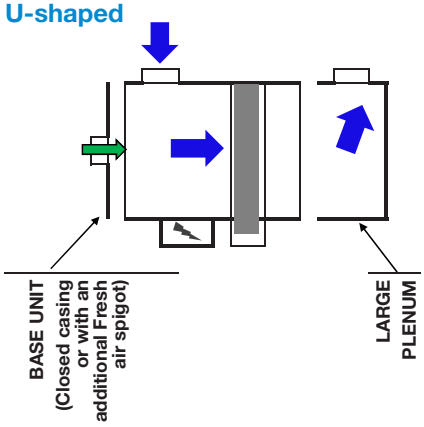

H-shaped or L-shaped

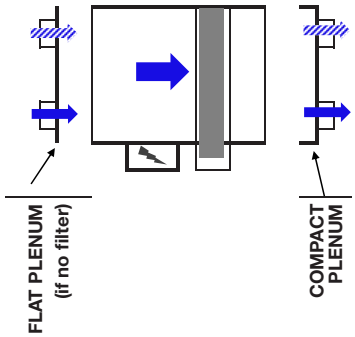

Compatibility Reminder	Size 2		Size 3	Sizes 4 to 7
	22x / 23x	279		
1x160	NH/NL	n.a.	n.a.	n.a.
1x200	NH/NL	NH	NH	n.a.
1x250	n.a.	n.a.	n.a.	n.a.

Compatibility Reminder	Size 2 to 3	Size 4	Size 5	Size 6	Size 7
2x160	NH/NL	n.a.	n.a.	n.a.	n.a.
2x200	NH/NL	NH/NL	NH	n.a.	n.a.
2x250	n.a.	n.a.	n.a.	NH	n.a.

n.a.: Not Available

M5 Filter configurations

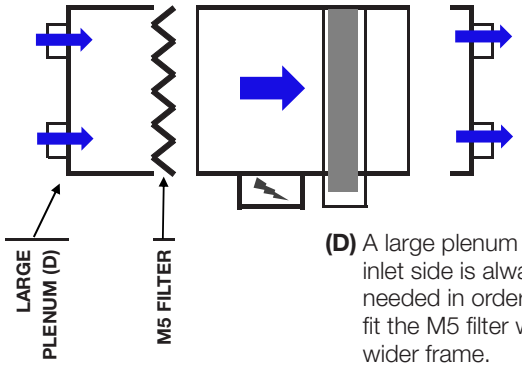

(D) A large plenum at the inlet side is always needed in order to fit the M5 filter with a wider frame.

"Fresh Air" Configuration at outlet side

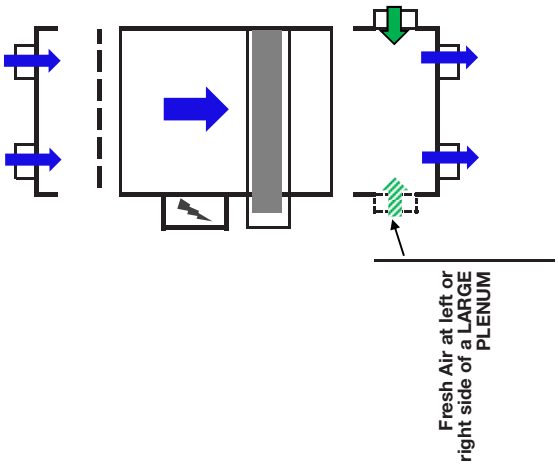

"Fresh Air" Configurations at inlet side

Lateral Fresh Air (opposite to coil hand)

Option 1 "Optimized"

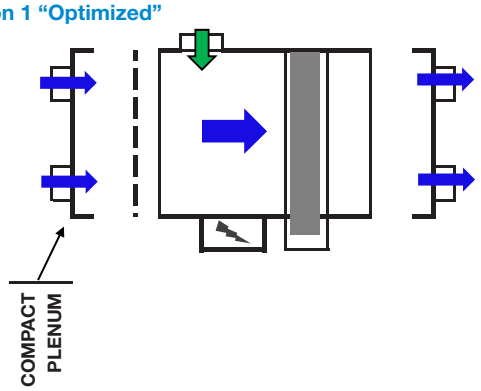

Inlet optimized: For compact design, the fresh air is fitted in base unit (opposite to coil hand).

Option 2 "In_opp"

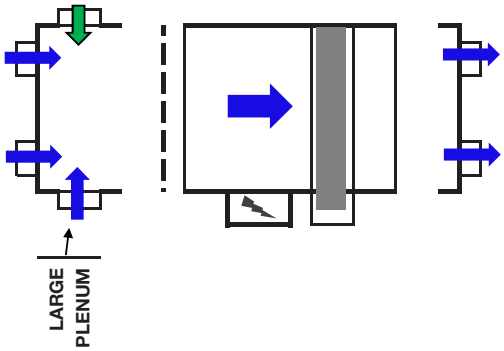

With this option, the fresh air position is opposite to coil hand and always fits into a large plenum.

Lateral Fresh Air "In_coil"

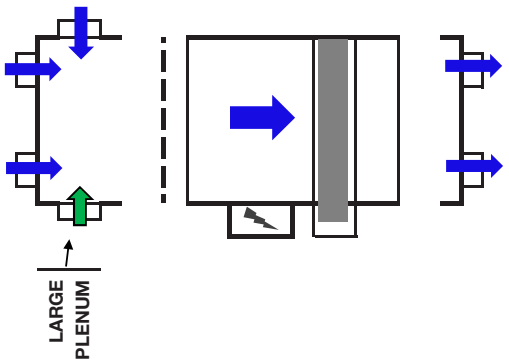

"In_line" Fresh Air (for sizes 2, 3 & 5)

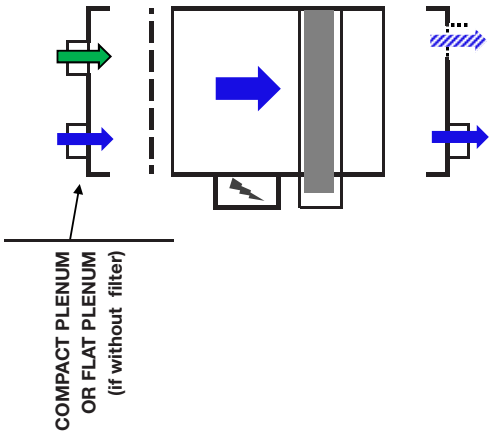

Operating limits

	Cooling mode	Heating mode
Water circuit	Min. inlet Temperature > 5°C < 40% ethylene / propylene glycol Water side pressure < 15.5 bar (1550 kPa)	Max. inlet Temperature < 80°C < 40% ethylene / propylene glycol Water side pressure < 15.5 bar (1550 kPa)
Ambient temperature and humidity	T < 27°C / 65% relative humidity or Humidity weight < 14.7 g/kg dry air	T < 40°C
Supply air temperature	T > 12°C with maximum ambient humidity conditions (14.7 g/kg dry air)	T < 60°C with supply plenum and spigots application Recommandation to avoid stratification T < 35°C
EC Motor - Electrical input	Min: 216V Min: 216V 60 or 50 Hz -1ph	Min: 216V Max: 244 V 60 or 50 Hz -1ph
AC motor - Electrical input	Min: 207V Max: 253 V 60 or 50 Hz -1ph (60Hz not available for 42NH325 & 335)	Min: 207V Max: 253 V 60 or 50 Hz -1ph (60Hz not available for 42NH325 & 335)

NOTE: All performances data certified by Eurovent are based on 50Hz application.
Carrier doesn't ensure the same performances when the unit operates at 60Hz; the RPM and power input of the fan-motor are usually higher.

Dimensional drawings

NOTE: All drawings shown have the coil connections on the right-hand side. Units with left-hand connections are symmetrical.

Standard unit with free air inlet and outlet

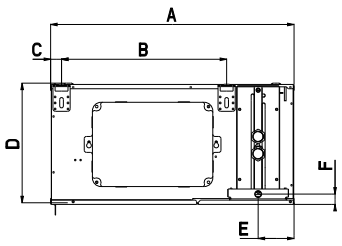

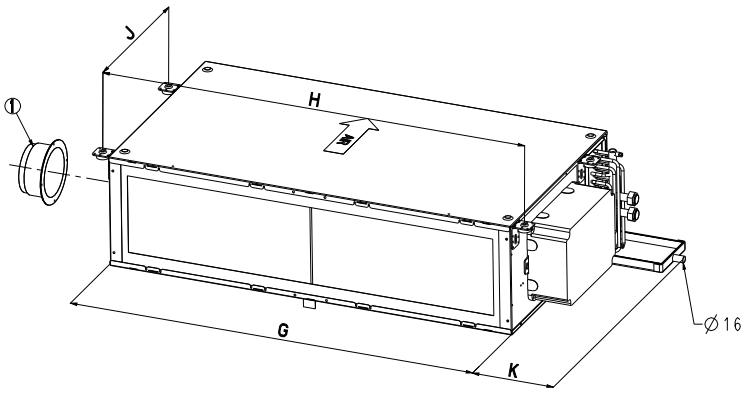

Dimensions in mm						
Size	**2xx**	**3xx**	**4xx**	**5xx**	**6xx**	**7xx**
A	520	520	520	520	575	575
B	330	330	330	330	385	385
C	25	25	25	25	25	25
D	235	235	235	235	285	285
E	85	85	85	85	85	85
F	17	17	17	17	25	25

Dimensions in mm						
Size	**2xx**	**3xx**	**4xx**	**5xx**	**6xx**	**7xx**
G	450	620	820	1020	1020	1320
H	500	670	870	1070	1070	1370
J	330	330	330	330	385	385
K	230	230	230	230	230	230
G + K	680	850	1050	1250	1250	1550
Weight* [kg]	15	18	23	27	30	36

Dimensional drawings

Unit with rectangular flanges at air inlet and outlet

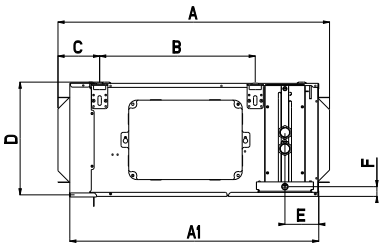

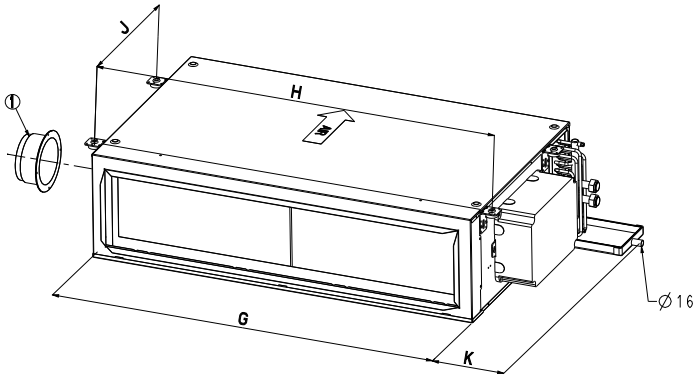

Dimensions in mm						
Size	**2xx**	**3xx**	**4xx**	**5xx**	**6xx**	**7xx**
A	615	615	615	615	670	670
B	330	330	330	330	385	385
C	103	103	103	103	103	103
D	235	235	235	235	285	285
E	85	85	85	85	85	85
Rectangular Flanges	380 x160	550 x160	750 x160	750 x160	950 x120	1250 x210

Dimensions in mm						
Size	**2xx**	**3xx**	**4xx**	**5xx**	**6xx**	**7xx**
F	17	17	17	17	25	25
A1	561	561	561	561	615	615
G	450	620	820	1020	1020	1320
H	500	670	870	1070	1070	1370
J	330	330	330	330	385	385
K	230	230	230	230	230	230
G + K	680	850	1050	1250	1250	1550
Weight* [kg]	15	18	23	27	30	36

Unit without filter with compact plenum at air inlet and outlet (optimized lenght)

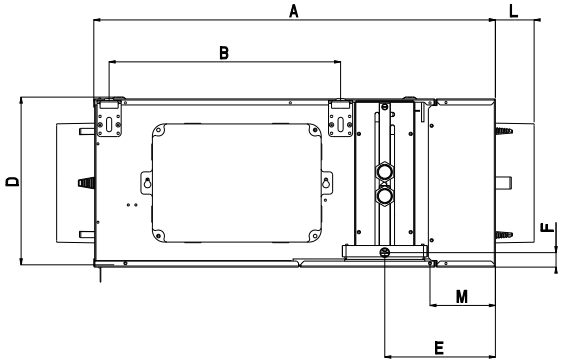

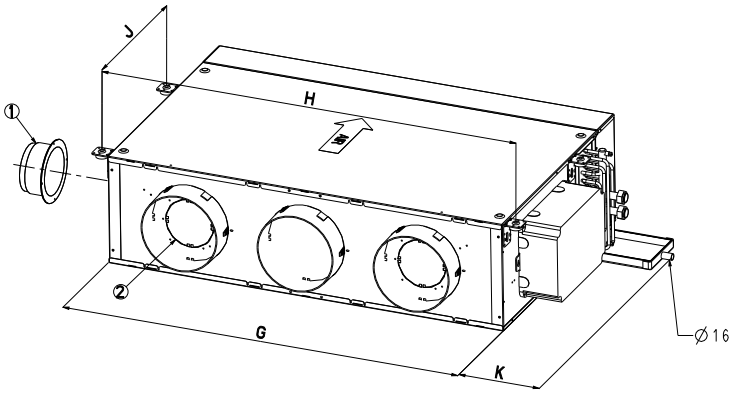

Dimensions in mm						
Size	**2xx**	**3xx**	**4xx**	**5xx**	**6xx**	**7xx**
A	611	611	611	611	666	666
B	330	330	330	330	385	385
C	25	25	25	25	25	25
D	235	235	235	235	285	285
E	185	185	185	185	185	185
F	17	17	17	17	25	25
G	450	620	820	1020	1020	1320

Dimensions in mm						
Size	**2xx**	**3xx**	**4xx**	**5xx**	**6xx**	**7xx**
H	500	670	870	1070	1070	1370
J	330	330	330	330	385	385
K	230	230	230	230	230	230
L	63	63	63	63	76	76
M	100	100	100	100	100	100
G + K	680	850	1050	1250	1250	1550
Weight* [kg]	19	23	29	33	37	44

Dimensional drawings

Unit with G1 or G3 filter with compact plenum at air inlet and outlet

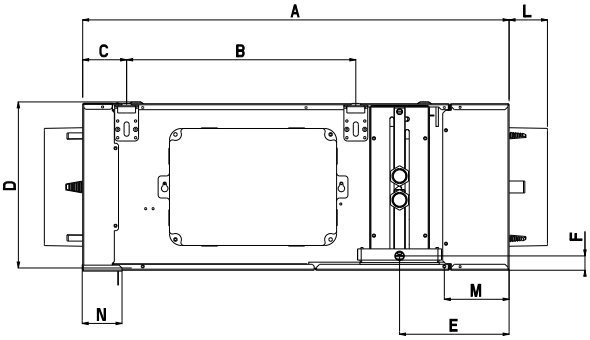

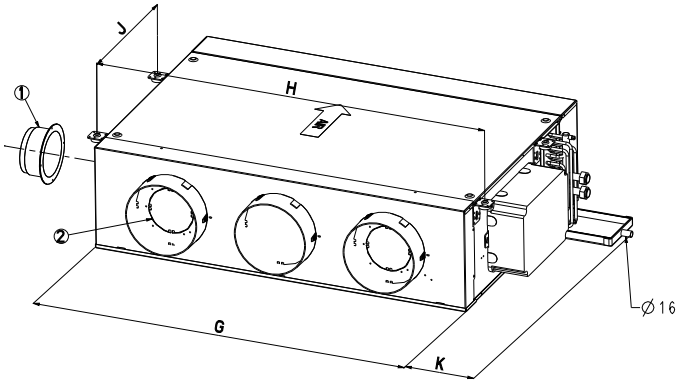

Dimensions in mm						
Size	**2xx**	**3xx**	**4xx**	**5xx**	**6xx**	**7xx**
A	660	660	660	660	715	715
B	330	330	330	330	385	385
C	75	75	75	75	75	75
D	235	235	235	235	285	285
E	185	185	185	185	185	185
F	17	17	17	17	25	25
G	450	620	820	1020	1020	1320

Dimensions in mm						
Size	**2xx**	**3xx**	**4xx**	**5xx**	**6xx**	**7xx**
H	500	670	870	1070	1070	1370
J	330	330	330	330	385	385
K	230	230	230	230	230	230
L	63	63	63	63	76	76
M	100	100	100	100	100	100
N	50	50	50	50	50	50
G + K	680	850	1050	1250	1250	1550
Weight* [kg]	19	23	29	33	37	44

LEGEND:
1 Lateral optimized fresh air position in base unit (opposite to coil hand at inlet)
2 In line fresh air position for compact plenum (with or without filter)
* Maximum weight 42NL/NH (AC or EC motor version) - without valve option - without water

⇨ Air flow direction
All dimensions are in mm.

Unit with G1, G3 or M5 filter with large plenum at air inlet and outlet

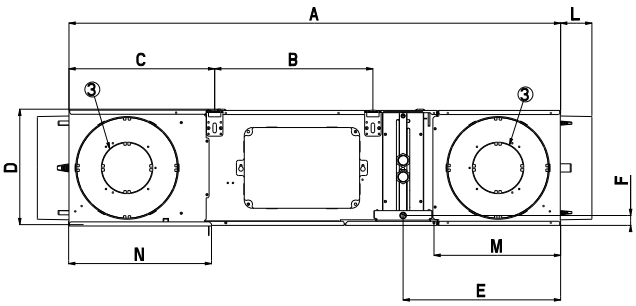

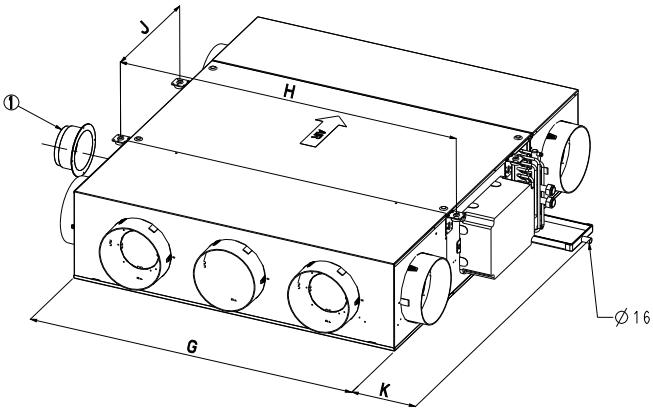

Dimensions in mm						
Size	**2xx**	**3xx**	**4xx**	**5xx**	**6xx**	**7xx**
A	1040	1040	1040	1040	1195	1195
B	330	330	330	330	385	385
C	305	305	305	305	355	355
D	235	235	235	235	285	285
E	333	333	333	333	382	382
F	17	17	17	17	25	25
G	450	620	820	1020	1020	1320

Dimensions in mm						
Size	**2xx**	**3xx**	**4xx**	**5xx**	**6xx**	**7xx**
H	500	670	870	1070	1070	1370
J	330	330	330	330	385	385
K	230	230	230	230	230	230
L	63	63	63	63	76	76
M	250	250	250	250	297	297
N	280	280	280	280	330	330
G + K	680	850	1050	1250	1250	1550
Weight* [kg]	22	27	34	40	45	53

LEGEND:
1 Lateral optimized fresh air position in base unit (opposite to coil hand at inlet)
3 Lateral fresh air position in large plenum (at inlet or outlet side)
* Maximum weight 42NL/NH (AC or EC motor version) - without valve option - without water

⇨ Air flow direction
All dimensions are in mm.

42BJ

Nominal cooling capacity 0.5-6.0 kW
Nominal heating capacity 0.5-12.2 kW

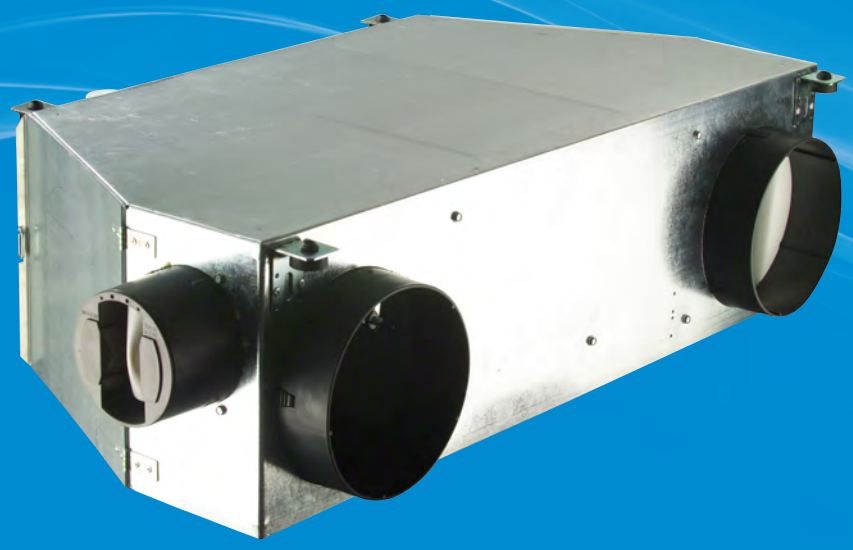

IDROFAN

The Carrier 42BJ Individual Comfort Module (ICM) is a compact air conditioning system, available in three sizes, designed to air condition individual rooms with an area of between 25 and 50 m^2.

The 42BJ ICM LEC incorporates a galvanised sheet steel casing with a lining of thermal and acoustic insulation (fire class M1).

It includes a centrifugal fan with a low-energy consumption (LEC) motor. This direct-drive motor is electronically commutated (commonly referred to as EC motor). It is piloted by a 0-10 V signal that permits operation with a wide range of rotational speeds, varying from the base setting and is precise, simple and quiet. It also includes an air filter, a fresh air inlet with adjustable air quantity, a chilled-water cooling coil and a hot-water heating coil and/or an electric resistance heater.

Flexible, thermally and acoustically insulated ducts connect ICM units to one or more plenums in the ceiling void. These feed unobtrusive linear ceiling diffusers (Carrier Moduboot 35BD/35SR units) supplying the individual rooms or zones.

These units can be installed above false ceilings or in floor voids but away from occupied zones, ideally in central areas where they are easily connected to hot-water and chilled-water circuits and the fresh air supply.

These circuits, normally installed in corridors and halls to facilitate maintenance, never pass through the conditioned spaces. Only the passive elements of the system, the 35BD/35SR diffusers are within the space they serve. This means that maintenance can be done away from the occupied areas and programming is possible while the building is occupied.

Low inherent noise was a key factor in the design of the ICM. With their high available static pressure, the units can be installed well away from the conditioned space.

Physical and electrical data

42BJ ICM LEC		1.9			2.9			4.9		
Fan speed*		L	M	H	L	M	H	L	M	H
Air flow	l/s	16	145	201	24	160	223	28	148	204
	m³/h	56	521	722	88	575	803	101	534	733
Available static pressure	Pa	1	50	97	1	50	99	3	50	92
Cooling mode**										
Total cooling capacity	kW	0.45	2.99	3.74	0.66	3.95	5.26	1.12	3.94	4.91
Sensible cooling capacity	kW	0.36	2.34	3.00	0.46	2.91	3.95	0.75	2.78	3.53
Water flow rate	l/s	0.02	0.12	0.17	0.03	0.19	0.25	0.06	0.25	0.26
	l/h	80	448	628	118	699	912	224	884	935
Water pressure drop	kPa	2	27	47	2	39	61	5	61	68
Water content	l	0.9	0.9	0.9	1.2	1.2	1.2	1.5	1.5	1.5
Two-pipe heating mode***										
Heating capacity	kW	0.51	3.56	4.45	0.75	4.72	6.33	1.19	4.53	5.77
Four-pipe heating mode****										
Heating capacity	kW	0.62	3.12	3.70	1.08	4.30	5.18	1.87	5.47	6.54
Water flow rate	l/s	0.02	0.07	0.10	0.03	0.10	0.12	0.05	0.15	0.16
	l/h	60	267	348	94	376	449	168	550	577
Water pressure drop	kPa	1	15	23	4	32	41	8	67	73
Water content	l	0.2	0.2	0.2	0.29	0.29	0.29	0.45	0.45	0.45
Electric heater	V-ph-Hz	230-1-50								
Maximum capacity	kW	0.5	1.9	2.23	0.75	2.12	2.25	1	2.25	2.25
Maximum current drawn	A	11	11	11	11	11	11	11	11	11
Sound levels										
Sound power level (return + radiated)	dB(A)	29	53	59	34	52	59	32	56	61
Sound power level (supply)	dB(A)	26	59	66	20	63	69	31	65	72
Global sound power level	dB(A)	31	61	67	34	63	69	34	65	72
Sound pressure level†	dB(A)	10	40	46	13	42	48	13	44	51
NR value†		-	35	41	-	37	43	-	39	46
Electrical data, motor		230 V-1 ph-50 Hz, EC motor with low energy consumption								
Power input	W	4	49	160	4	68	174	5	46	186
Air filter F5 or F6	mm	240 x 400			240 x 550			315 x 550		
Physical data										
Connection diameter, chilled and hot-water coil	in	1/2 gas			1/2 gas			1/2 gas		
Spigot connection diameter	mm	200			200			250		
Length	mm	900			1100			1100		
Depth	mm	665			815			815		
Height	mm	270			270			345		
Unit weight (standard)	kg	31			40			50		

* Fan speed: L = Low, M = Medium, H = High
** Eurovent conditions: Entering air temperature 27°C/47% rh, entering water temperature 7°C, water temperature difference 5 K.
*** Eurovent conditions: Entering air temperature 20°C - entering water temperature 50°C, with same water flow rate as in cooling mode.
**** Eurovent conditions: Entering air temperature 20°C - entering water temperature 70°C, water temperature difference 10 K.
† Based on a hypothetical sound attenuation for the room and the system of -21 dB(A).

Codification

	Product type*				Size		Modification code*	Coils	Supply and return air plenum*	Valves	Valve motors	Control	Sensors	Filter and access	Fresh air	Motor wiring*
Product reference	4	2	B	J	1	9	E	A	T	A	A	A	A	A	A	W
Digit	1	2	3	4	5	6	7	8	9	10	11	12	13	14	15	16

* Fixed values

Digits 5/6	
1	9
2	9
4	9

Digit 8	
A	2 pipes right
B	2 pipes left
C	4 pipes right
D	4 pipes left
E	2 pipes/2 wires right, low pressure (PTC 2 wired stages)
F	2 pipes/2 wires left, low pressure (PTC 2 wired stages)
G	2 pipes/2 wires right, high pressure (PTC 5 wired stages)
H	2 pipes/2 wires left, high pressure (PTC 5 wired stages)
J	2 pipes/2 wires right, high pressure (PTC 4 wired stages)
K	2 pipes/2 wires left, high pressure (PTC 4 wired stages)

Digit 10	
-	None
C	2-way valve
D	3-way valve
J	2-way valve + flexible piping
K	3-way valve + flexible piping

Digit 11	
0	None
A	230 V on/off
C	3 points 230 V

Digit 12	
-	None
A	NTC
D	NTC + IAQ board
K	NTC + fuse holder
L	NTC + IAQ board + fuse holder

Digit 13	
-	None
A	Return air sensor
B	Supply air sensor
C	Changeover sensor
D	A + B
E	A + B + C
F	A + C
G	B + C
H	CO2 sensor
J	A + CO2
K	B + CO2
L	C + CO2
M	A + B + CO2
N	A + C + CO2
P	B + C + CO2
Q	A + B + C + CO2

Digit 14	
F	F5 access from below
G	F5 side access
H	F5 access from above
K	F6 access from below
L	F6 side access
M	F6 access from above
S	Activated carbon filters + UVPCO (access from below)
T	Activated carbon filters + UVPCO (side access)
U	Activated carbon filters + UVPCO (access from above)

Digit 15	
-	None
A	125 mm ø fresh air spigot only
B	8.3 l/s (30 m^3/h)
C	16.6-44.4 l/s (21/28/36) 60-160 m^3/h (75/100/130)
E	Motorised fresh air valve adapter ø 125 mm
X	SPECIAL

Features and advantages

Features

- Comfort
  The 42BJ ICM LEC can be equipped with a numerical Carrier NTC controller, with each room occupant having his or her own remote user interface, on a wall or desk, to select the preferred comfort level:
  - Ambient room temperature
  - Forced ventilation function (quick air renewal in the office)
  - Choice of occupied or unoccupied mode at each ICM LEC to control energy usage.

  Aquasmart Evolution allows all units to be controlled centrally to satisfy overriding criteria or to respond to local selections. The central energy management system continu-ously controls the comfort levels to achieve optimum energy usage without disturbing individual comfort level selections.

  If the product is supplied without a Carrier control device, verification of EMC conformity is the responsibility of the installer.

Air quality

- Indoor Air Quality (IAQ)
  Carrier is committed to developing an Indoor Air Quality (IAQ) control system that is integrated into the air conditioning units. This is a major innovation, and the beginning of a new era in air conditioning.

  It means that each individual comfort module (ICM) is equipped with a high-tech fresh air intake and filtration control system to effectively combat any type of pollutant.

  This guarantees optimised indoor air quality in two stages, as described below:
  - High-efficiency filtration with filter type F5 or F6
  - Modulation of the fresh air flow. In order to control the air flow supplied to a room, Carrier air conditioners can be equipped with a fresh air flow modulation system.
- Three objectives:
  - To adjust the ventilation rate to the actual occupation in the rooms
  - To maintain good indoor air quality in order to ensure comfort and hygiene for the occupants.
  - To control energy consumption due to the air renewal in the rooms and adjust it to avoid “overventilation” of the building, and to minimise the operating costs especially during unoccupied periods.
- Operating pinciples
  The occupants of a room release on average 0.0045 l/s (16,2 l/h) CO_2. A CO_2 sensor, placed in the return air duct of the terminal, checks the concentration in the air conditioned room. The measured concentration indicates the actual occupation of the room.

  The sensor sends a signal to the numerical Carrier controller which in turn passes an action signal to the fresh air valve:
  - if the CO_2 concentration is below a threshold value, the fresh air flow is minimal or zero,
  - if it is above, the fresh air flow is increased up to the specified maximum.
- Operating limits
  Supply air temperature 12°C, when the unit is installed in a room with an ambient temperature of 27°C dry bulb and 65% relative humidity.

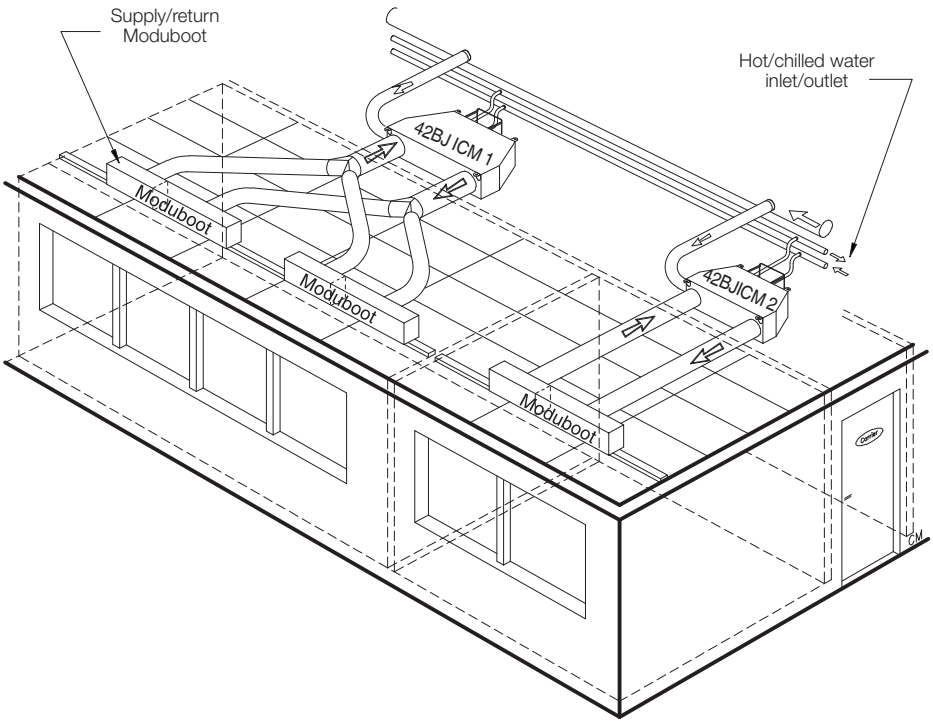

Main modules and components

- Variable-speed LEC fan motor assembly
  The 42BJ ICM LEC units are equipped with a variable-speed fan motor assembly controlled by a 0-10 V signal from the electronic Carrier controller.
- Water coil
  The water coil has aluminium fins mechanically bonded to copper tubes by expansion.

  Water inlet and outlet connections are threaded 1/2" gas. Air purge valves are standard. The coil is integral with the drain pan and the coil access door to ease removal for service. Coils available are:
  - two-pipe coils with changeover or for use with an electric heater.
  - four-pipe coils.

- Thermoformed condensate drain pan
  The main pan is below the coil with an auxiliary pan below the valves. This monobloc construction prevents leaks. With the coil on the suction side of the fan to facilitate drainage, condensate has to be drained through a non-return flap valve. The difference in height between the main and auxiliary drain pans is enough to overcome the depression within the unit and dispenses with the need for an in-built siphon.

  The auxiliary pan is insulated. The drain stub itself has 16 mm external diameter.
- Filter and access
  The 42BJ ICM is fitted with a high-efficiency F5 or F6 type filter.

  Fire rating medium M1, metal frame

  Three filter access options are provided on the 42BJ:
  - From above for units in false floor voids
  - From below for units in false ceiling voids
  - From the side (all applications)

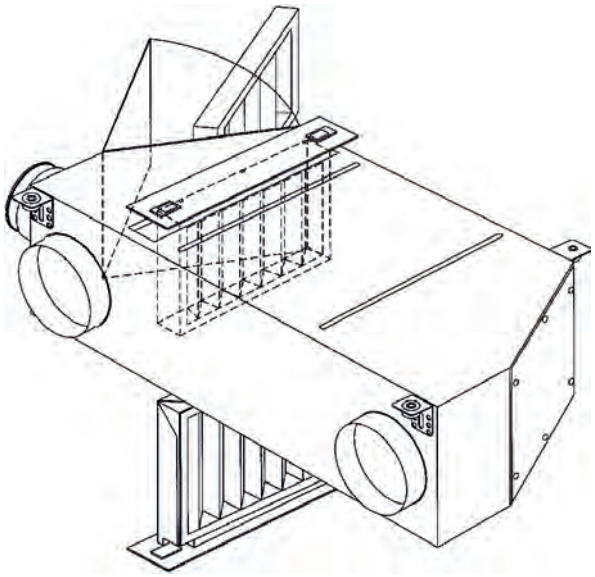

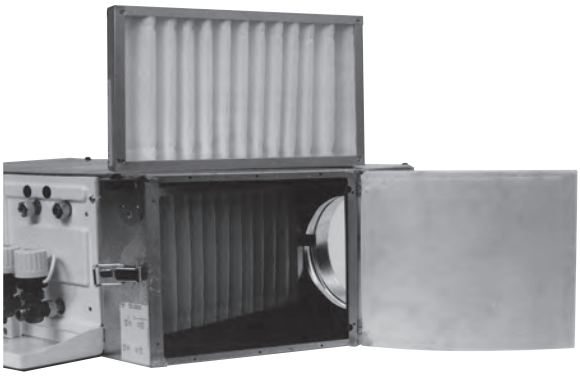

- Constant volume fresh air controller (option)
  The ICM unit can be fitted with a constant fresh air flow controller allowing the number of air changes to be controlled accurately. It is vital to choose the correct constant fresh air flow controller for the intended occupancy of the room or zone.

  The following range of controllers is available:
  - 8.3 l/s or 30 m³/h (-10%; +20%)
  - 16.6 l/s or 60 m³/h (-10%; +20%)

  The fresh air supply is located upstream of the water coil. The collar which houses the flow controller is made of ABS and has the following diameter:
  - 125 mm for the controller with 16.6 l/s (60 m³/h)
  - 74 mm for the controller with 8.3 l/s (30 m³/h).

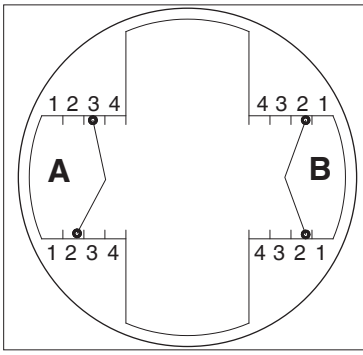

	l/s	m³/h	A	B
MR60	17	60	4-4	4-4
MR75	21	75	4-3	4-3
MR85	24	85	3-3	3-2
MR90	25	90	3-2	2-2
MR100	28	100	2-1	2-1
MR105	29	105	2-1	1-1
MR110	31	110	1-1	1-1
MR120	33	120	3-3	-
MR130	36	130	2-1	-
MR140	39	140	1-1	-
MR160	44	160	-	-

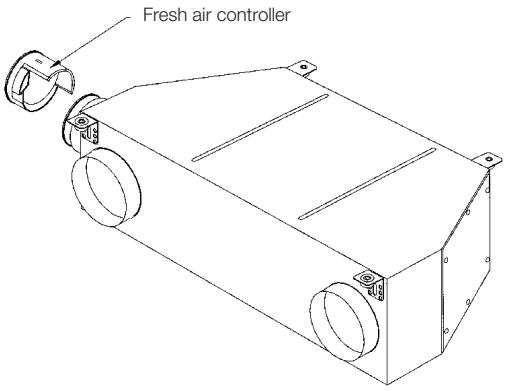

Important: If the ICM is fitted with a return air temperature sensor, the constant fresh air flow rate must not exceed 50% of the air flow rate delivered by the unit at minimum speed.

Note: The 16.6 l/s or 60 m³/h fresh air controller can be modified on site by removing or retracting of the two plastic restrictions in order to bring its capacity up to a maximum constant fresh air flow of 44.4 l/s (160 m³/h).

A label attached to the 42BJ shows how to modify the control of the two plastic restrictions.

Note: To operate correctly, the 8.3 l/s (30 m³/h) constant fresh air flow controller requires a differential pressure in the range 50 Pa to 200 Pa. The 16.6 l/s (60 m³/h) constant fresh air controller requires a differential pressure in the range 70 Pa to 200 Pa.

- PTC electric heater (option)
  These are high-performance PTC electric heaters (PTC = positive temperature coefficient) which make use of two technologies: electric heating and surface temperature limitation (a state-of-the-art technology based on the use of ceramics).

  The true dissipated power is then dependent on the temperature and flow rate of the incoming air.

The technology ensures totally safe self-regulation of the dissipated power. In addition, each electric heater is fitted with a self-resetting safety thermostat of the normally closed type that cuts out when the temperature rises to 70°C with an average differential of 20 K.

Caution: It is vital to disconnect the ICM from the general power supply before carrying out any work on the electric heater.

Enhanced comfort without stratification: supply air temperature = 35°C

Technical specifications

Valves (option)

It should be noted that the valve body is the same for whatever controller option is chosen.

- Electrothermal actuator
  The actuator is a 230 V a.c. on/off type. Linear movement is provided by the expansion and contraction of a wax element heated by an electrical resistor.
- Two-way 1/2” valve body
  - 1/2” male BSP connection for union nuts
  - Straight valve body with arrow indicating direction of flow embossed on valve body
  - Nominal size DN 15 for 1/2” valve
  - Fluid: water and glycol solution (max. 40% glycol)
  - Operating range: 2-90°C
  - Nominal pressure: PN 16 bar (1600 kPa)
  - Kvs = 1.6
- Three-way 1/2” valve body (with integral bypass)
  - 1/2” male BSP connection for union nuts
  - Straight valve body with arrow indicating direction of flow embossed on valve body
  - Nominal size DN 15 for 1/2” valve
  - Fluid: water and glycol solution (max. 40% glycol)
  - Operating range: 2-90°C
  - Nominal pressure: PN 16 bar (1600 kPa)
  - Kvs = 1

Water valve pressure drop

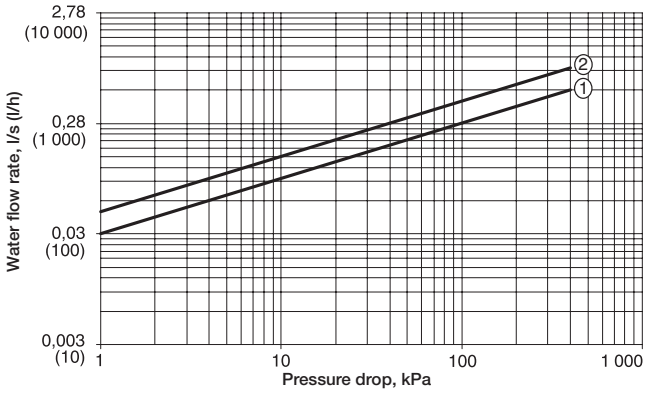

1 Kvs = 1
2 Kvs = 1.6

Flexible water pipes

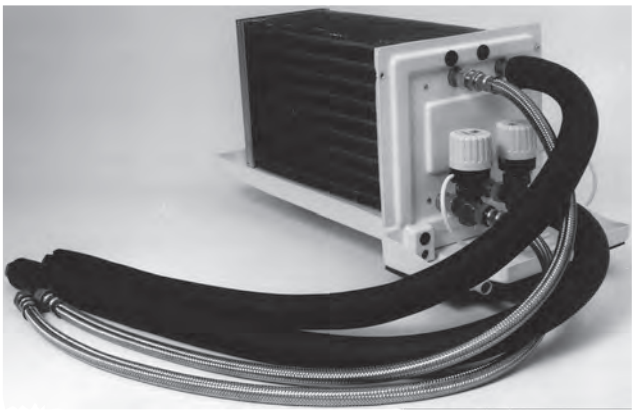

- Materials
  - Pipes: MEPD-based elastomer (modified ethylene-propylene-diene)
  - Braid: 304L stainless steel
  - Insulation: cellular foam rubber with M1 fire rating (9 mm thick, flexible water pipes).

- Characteristics
  - Minimum bend radius: 106 mm
  - The flexible water pipes are designed for treated or untreated water (maximum 40% ethylene glycol or propylene glycol).
  - Maximum hot water temperature 90°C
  - Maximum operating pressure: 16 bar
  - 1/2” flat gas connections
  - Length: 1 m.

Air distribution with Optimix linear diffusers

Cooling air flow

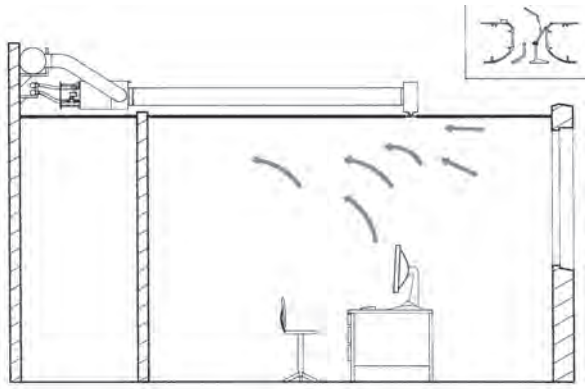

Heating air flow

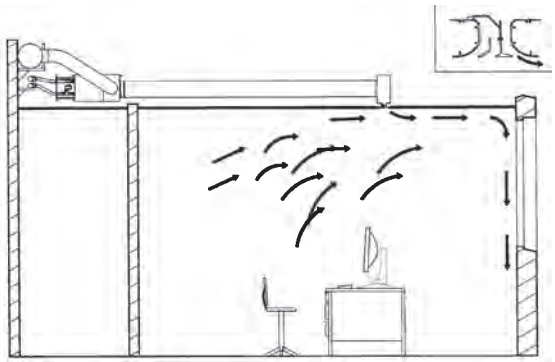

Water coil pressure drop

Water coil pressure drop curves, 42BJ MCI LEC size 1.9

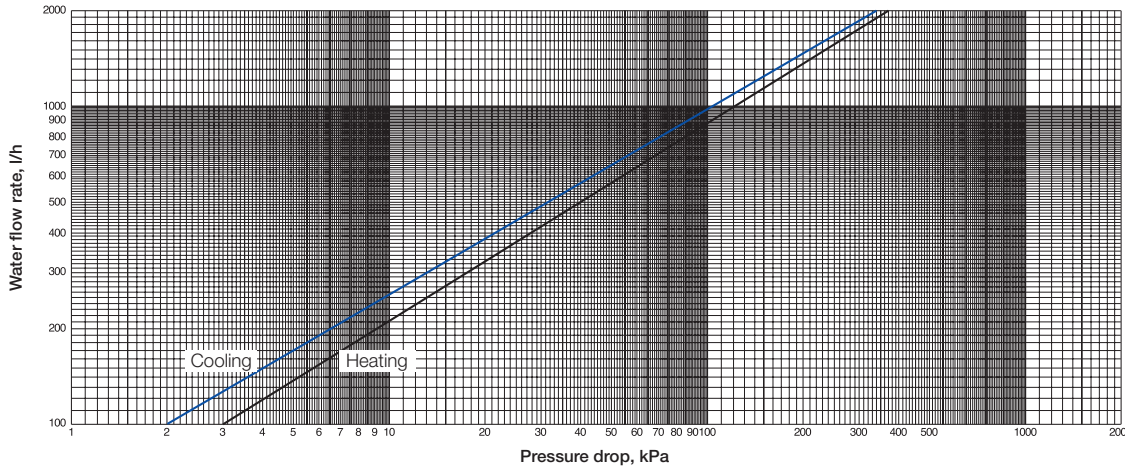

Water coil pressure drop curves, 42BJ MCI LEC size 2.9

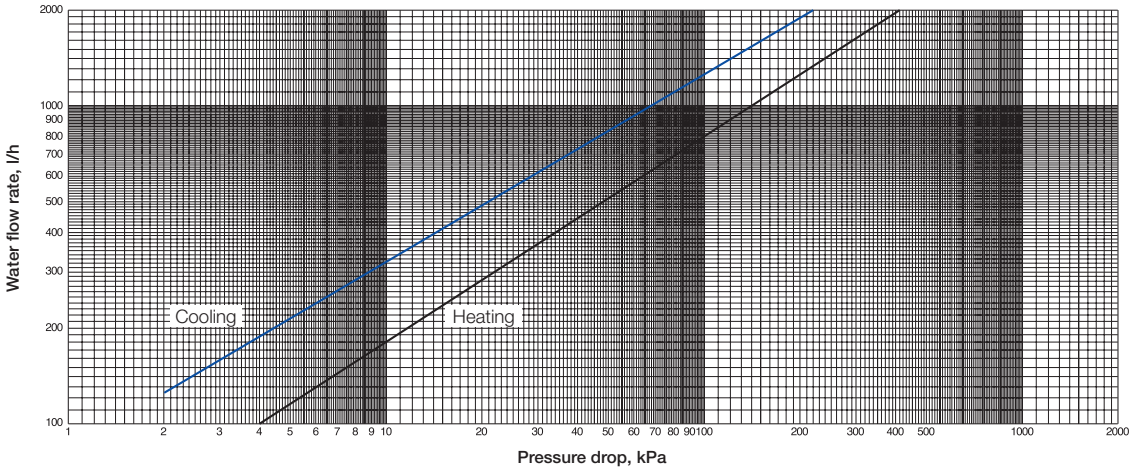

Water coil pressure drop curves, 42BJ MCI LEC size 4.9

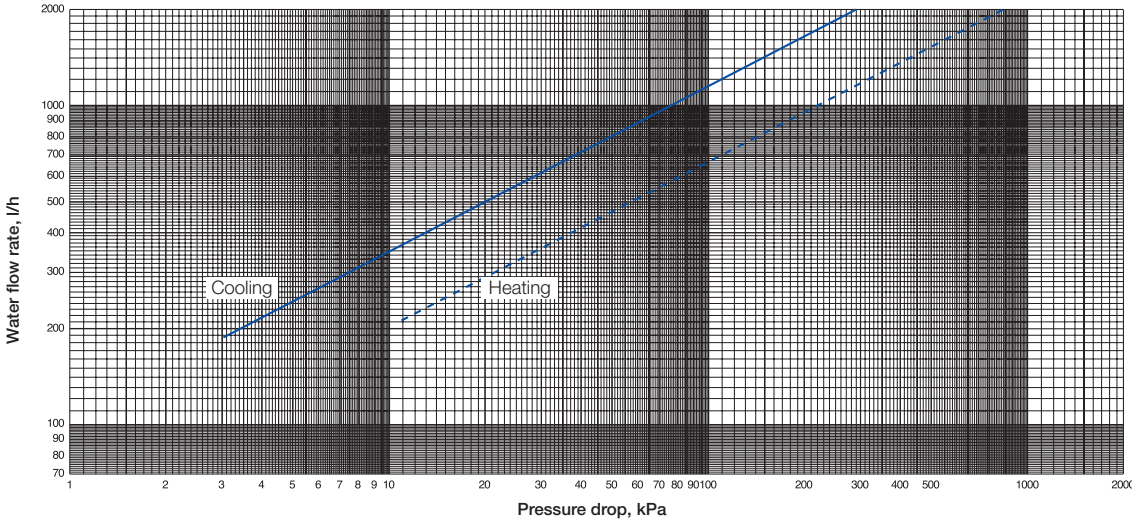

Notes: The curves are plotted for the following conditions: entering hot-water temperature 50°C, entering chilled-water temperature 6°C.
To convert l/h to l/s, please divide by 3600.

Air flow/available pressure curves

Available static pressure curve (Pa) as a function of air flow (m^3/h or l/s)

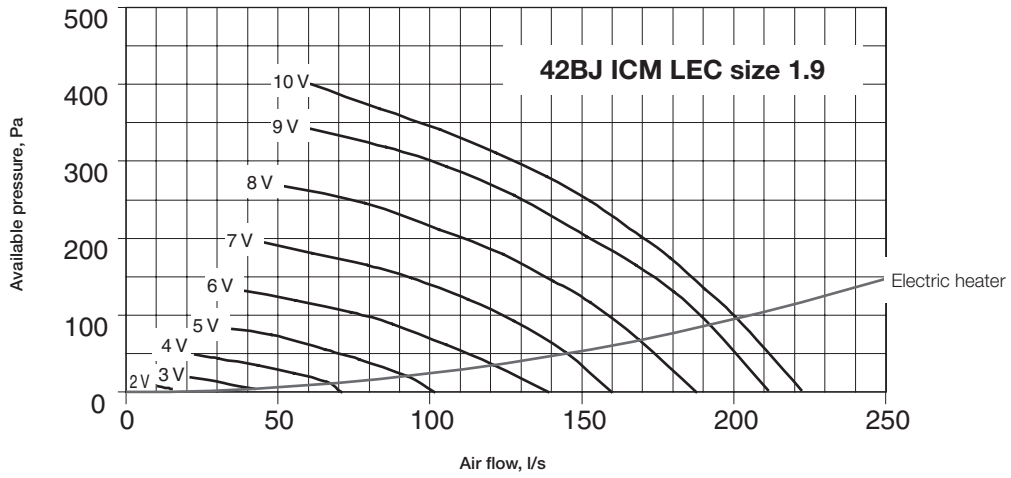

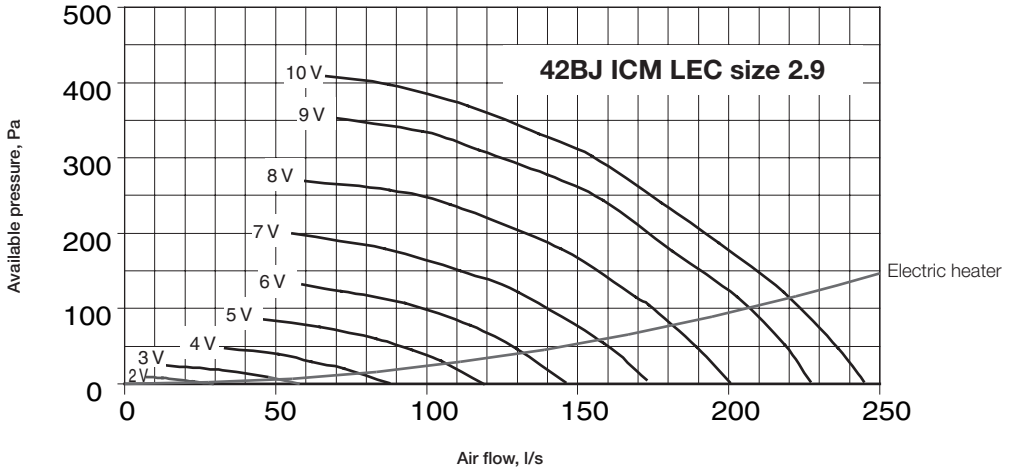

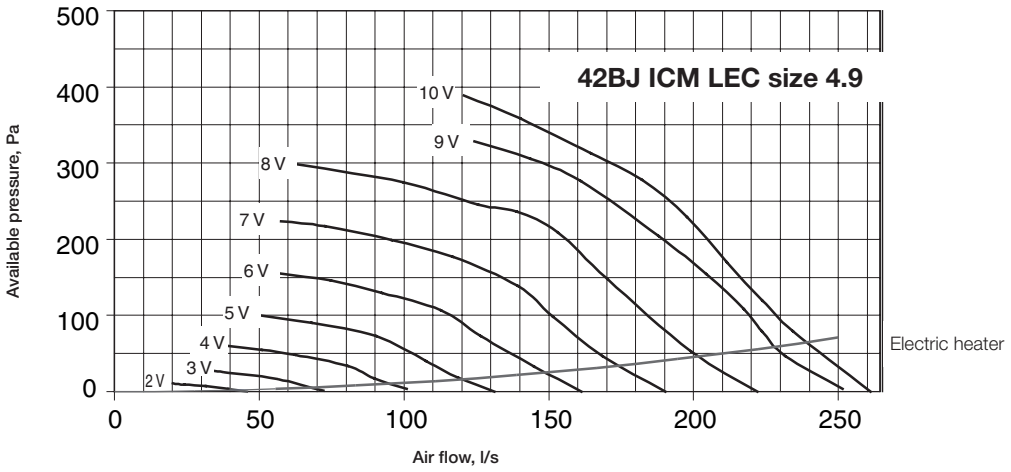

Dimensions and clearances 42BJ 1.9

Connections on the left-hand side

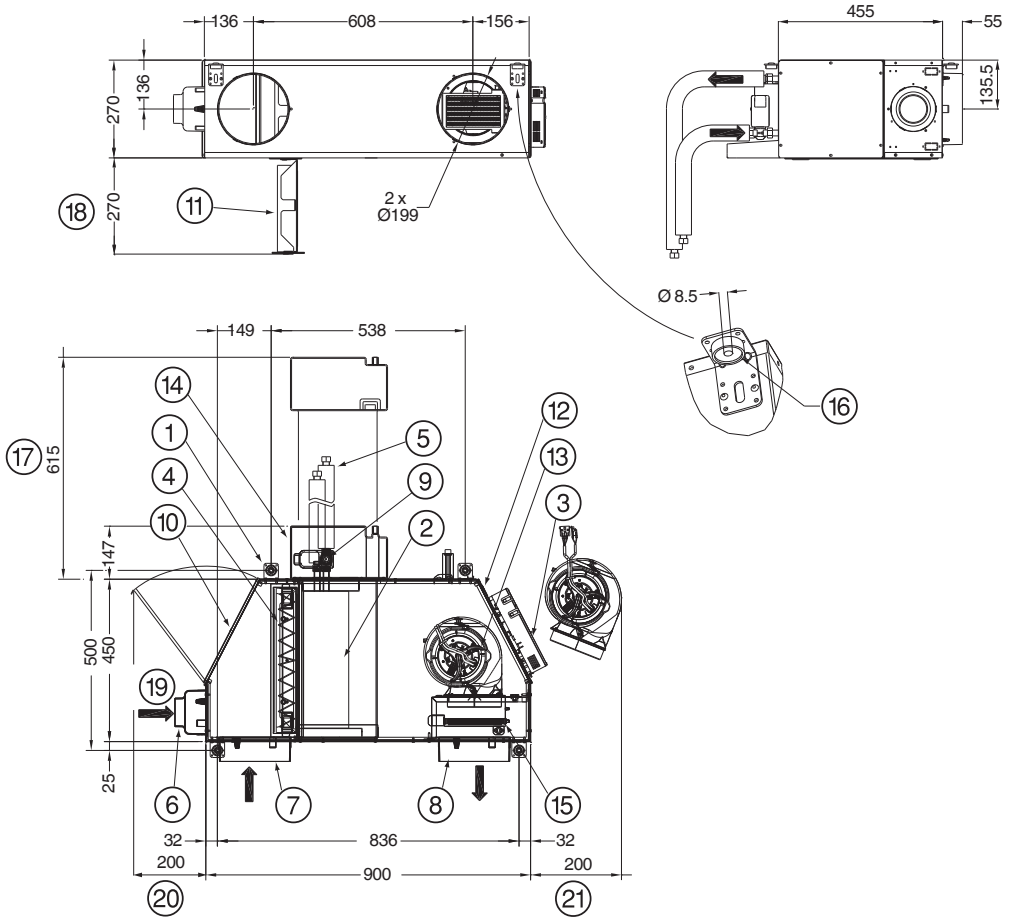

Connections on the right-hand side

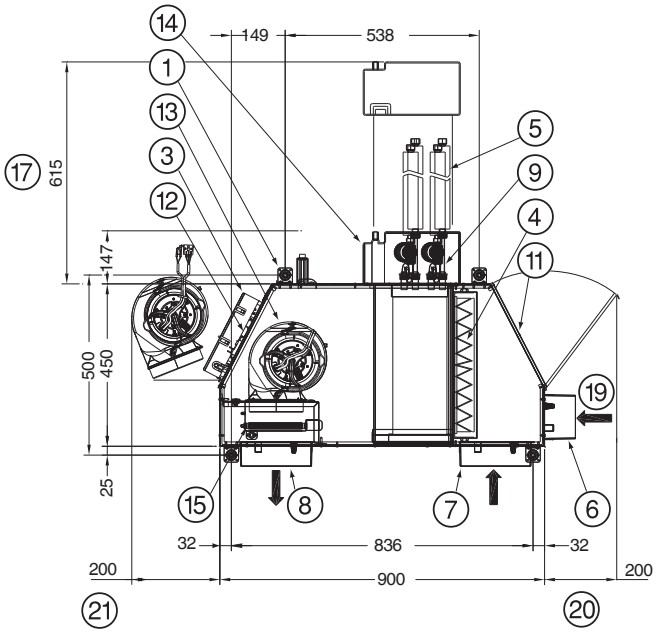

Legend
Dimensions are given in mm.

1. Suspension lugs
2. Hot/chilled-water coil (option)
3. Communicating numerical Carrier controller
4. Air filter
5. Hot/cold water supply and return connections
6. Fresh air connection (option)
7. Return air duct connection
8. Supply air duct connection
9. Water flow control valves (option)
10. Side filter access door
11. Motor access door
12. LEC fan motor assembly
13. Condensate drain pan
14. Electric heater (option)
15. Electric heater
16. Rubber grommet
17. Clearance condensate pan and coil assembly
18. Clearance bottom filter access (option)
19. Fresh air (option)
20. Clearance side filter access
21. Clearance for fan removal

Dimensions and clearances 42BJ 2.9

Connections on the left-hand side

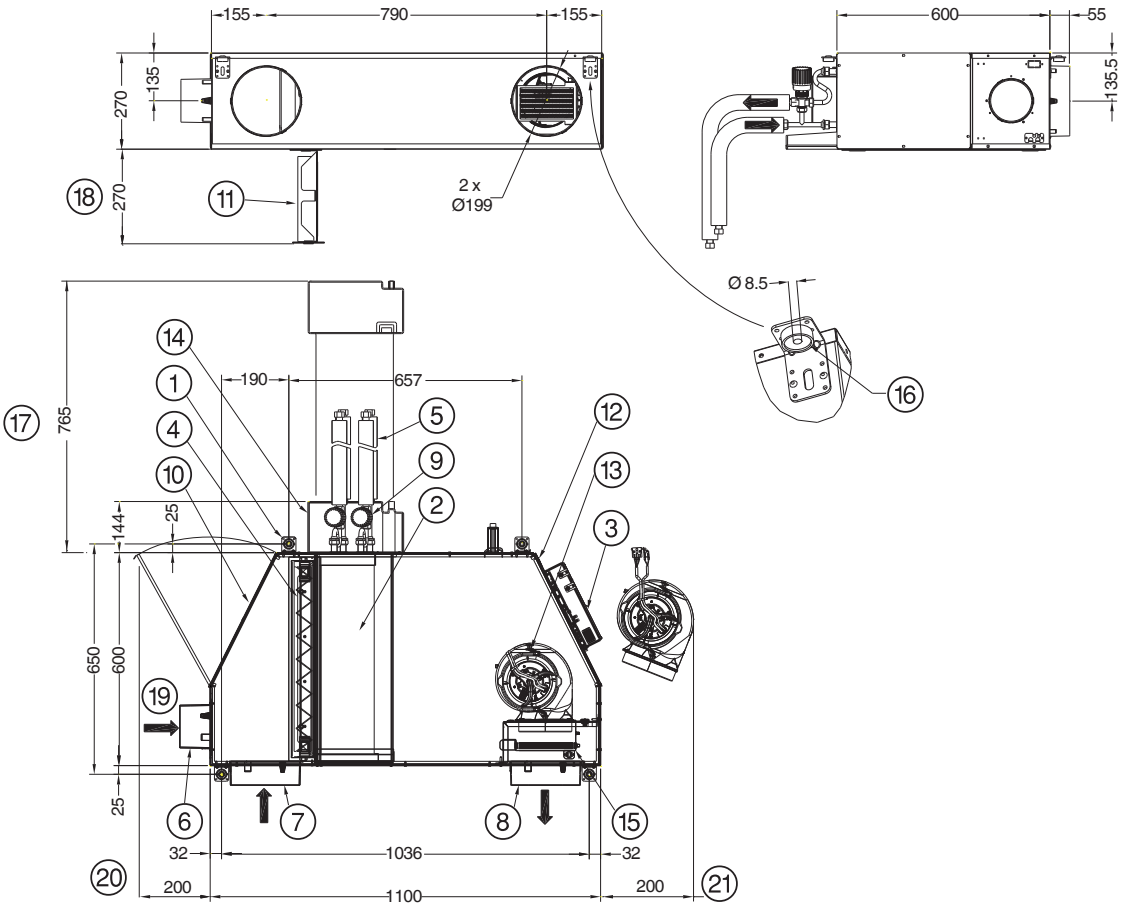

Connections on the right-hand side

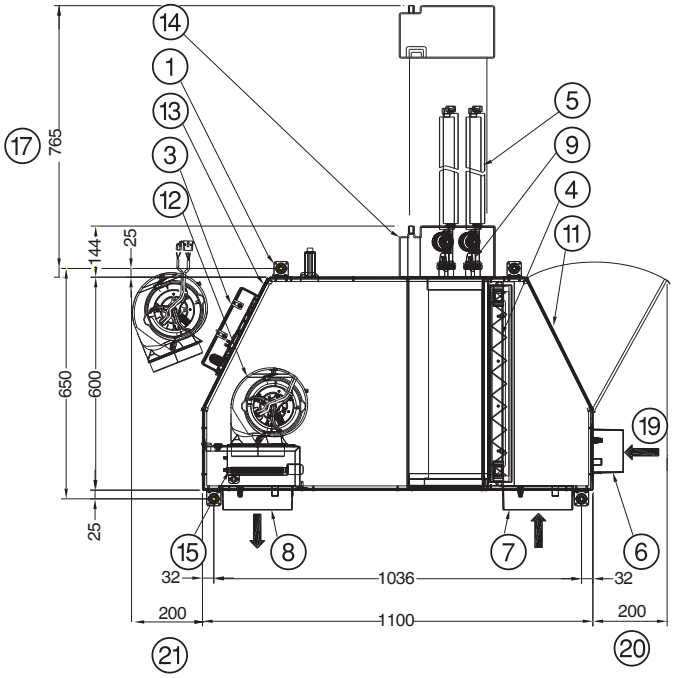

Legend
Dimensions are given in mm.

1. Suspension lugs
2. Hot/chilled-water coil (option)
3. Communicating numerical Carrier controller
4. Air filter
5. Hot/cold water supply and return connections
6. Fresh air connection (option)
7. Return air duct connection
8. Supply air duct connection
9. Water flow control valves (option)
10. Side filter access door
11. Motor access door
12. LEC fan motor assembly
13. Condensate drain pan
14. Electric heater (option)
15. Electric heater
16. Rubber grommet
17. Clearance condensate pan and coil assembly
18. Clearance bottom filter access (option)
19. Fresh air (option)
20. Clearance side filter access
21. Clearance for fan removal

Dimensions and clearances 42BJ 4.9

Connections on the left-hand side

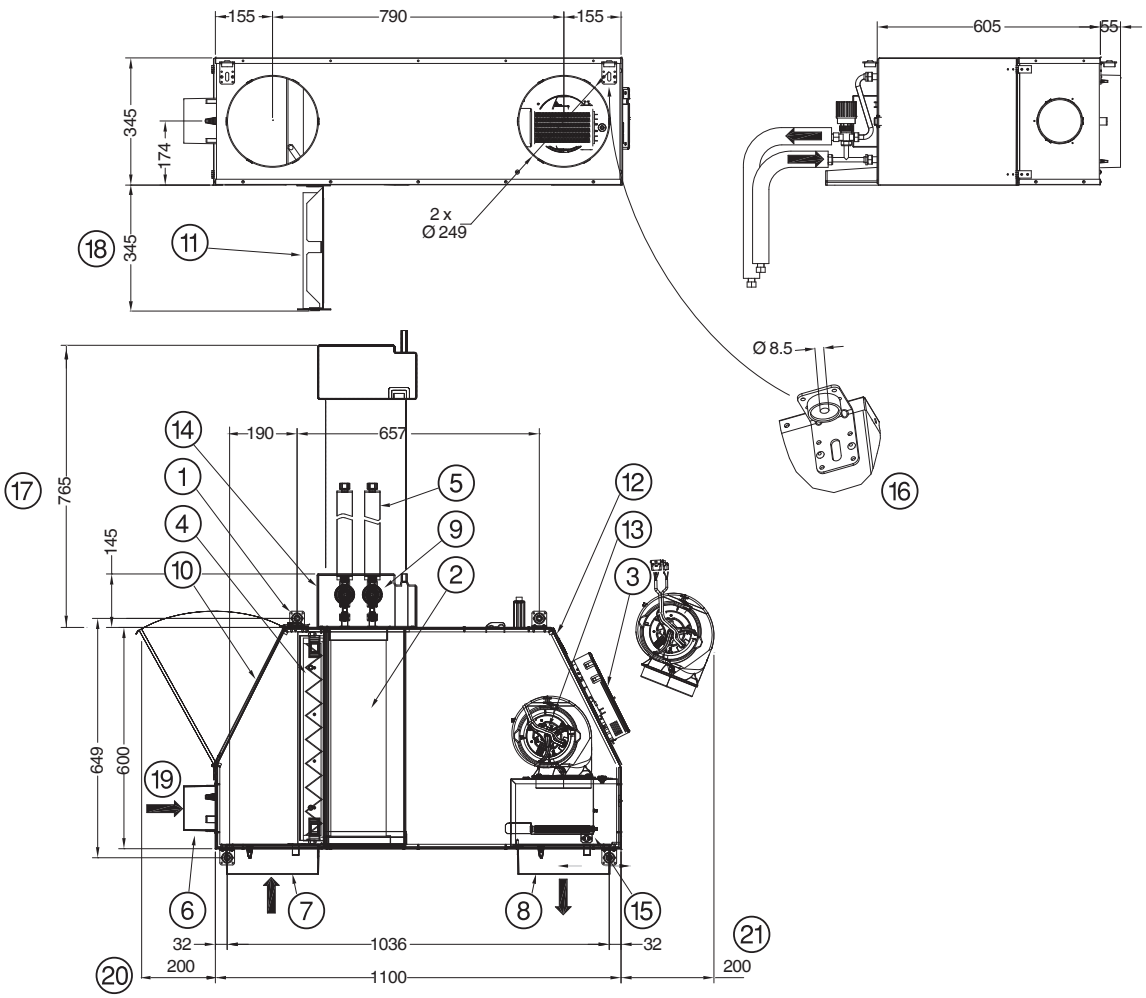

Connections on the right-hand side

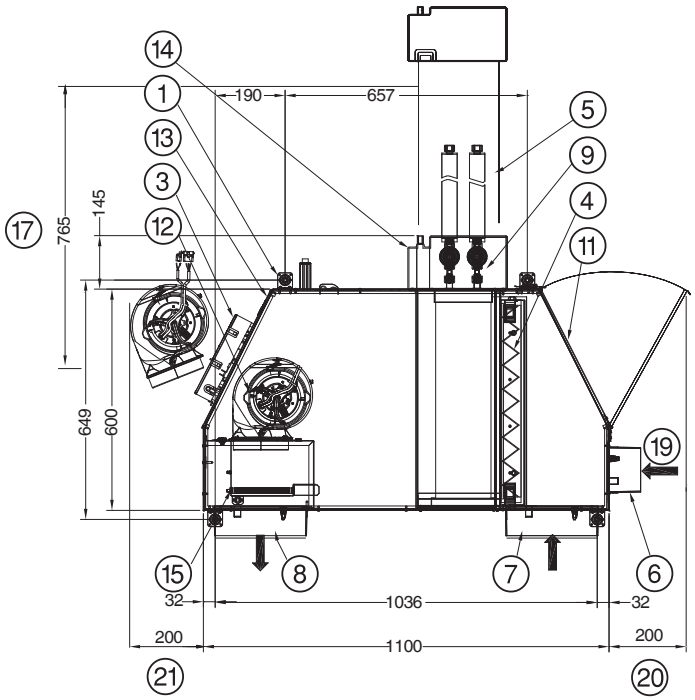

Legend
Dimensions are given in mm.

1. Suspension lugs
2. Hot/chilled-water coil (option)
3. Communicating numerical Carrier controller
4. Air filter
5. Hot/cold water supply and return connections
6. Fresh air connection (option)
7. Return air duct connection
8. Supply air duct connection
9. Water flow control valves (option)
10. Side filter access door
11. Motor access door
12. LEC fan motor assembly
13. Condensate drain pan
14. Electric heater (option)
15. Electric heater
16. Rubber grommet
17. Clearance condensate pan and coil assembly
18. Clearance bottom filter access (option)
19. Fresh air (option)
20. Clearance side filter access
21. Clearance for fan removal

42GM

IDROFAN

The 42GM Individual Air Treatment Module (ITM) is something more than a simple air conditioner which enables room air temperature to be controlled. It is a total, integrated comfort system in the building.

The Carrier 42GM is a compact central station air handler to supply conditioned air at a rate of 125 l/s to rooms with floor areas of approximately 25 m^2. The main components of the unit are an air filter, a fresh air supply, equipped with an air flow controller (option), a chilled water cooling coil, a hot water heating coil or an electric resistance heater, a centrifugal fan. The unit is controlled by a Carrier numeric controller.

Physical data

42GM		Size 1.9 (2 pipes)	Size 1.9 (4 pipes)
Fan			
Air flow	l/s (m^3/h)	94 (337)	94 (337)
Pressure drop	Pa	290	290
Cooling mode			
Total cooling capacity	kW	2.20	2.20
Sensible cooling capacity	kW	1.70	1.70
Water flow rate	l/s (l/h)	0.11 (380)	0.11 (380)
Water pressure drop	kPa	65 (with 2-way valve)	47 (with 2-way valve)
4-pipe heating mode			
Heating capacity	kW	-	2.21
Water flow rate	l/s	-	0.05 (190)
Water pressure drop	kPa	-	10
Electric heater			
Low-capacity heating	W	470	-
High-capacity heating	W	1750	-
Sound levels			
Sound power level (inlet and radiated)	dB(A)	65	65
Sound power level (outlet duct)	dB(A)	70	70
Sound pressure level*	dB(A)	49	49
NR value		45	45
Power supply	V-ph-Hz	230-1-50	230-1-50
Power input	W	115	115
Current draw	A	0.81	0.81
Dimensions			
Coil inlet/outlet diameters	in	1/2 gas	1/2 gas
Length	mm	1202	1202
Height	mm	412	412
Depth	mm	300	300
Weight	kg	30	30

Based on Eurovent rating standards:
Cooling: Entering/leaving air temperature = 27°C db/19°C wb – entering/leaving water temperature = 7°C/12°C.
Heating (2 pipes): Entering air temperature = 20°C – entering water temperature = 50°C, same water flow rate as in cooling.
Heating (4 pipes): Entering air temperature = 20°C – entering/leaving water temperature = 70°C/60°C.
* Based on a hypothetical sound attenuation for the room and the system of -21 dB(A).

Options/accessories

- Customised product on request

35BD linear diffuser (supply and return air)

Features and advantages

- One size with two-pipe plus electric heater or four-pipe coils, with an air flow of 94 l/s, a cooling capacity of 2.2 kW and a heating capacity of 1.7 kW.
- Decentralised compact ducted chilled-water fan coil system, designed for installation in plant rooms. This allows centralised service and maintenance.
- Reliable and efficient heating and cooling for office blocks and institutional buildings.
- High efficiency EU6 filter.
- Extremely low sound level.
- The LEC (low energy consumption) fan motor assembly is available as standard. This direct-drive motor is electronically commutated (EC motor), controlled by a 0–10 V signal and allows precise, simple and quiet unit operation in a wide range of rotational speeds in variation from the original speed.
- High-pressure centrifugal fans, compatible with air distribution systems up to 300 Pa.
- Compatible with the 35BD air diffuser range.
- Safe factory-installed electric heater for single or two-stage hot water heating.
- Available with demand control ventilation (DCV) and CO_2 sensor.
- Can be equipped with a UV-PCO IAQ module.
- Low hydraulic pressure drop with a valve mounted, compatible with all chiller pump kits.
- Quick installation with factory-installed options (controls, valves).

Dimensions/clearances

42GM with front fastening support with constant-flow fresh air

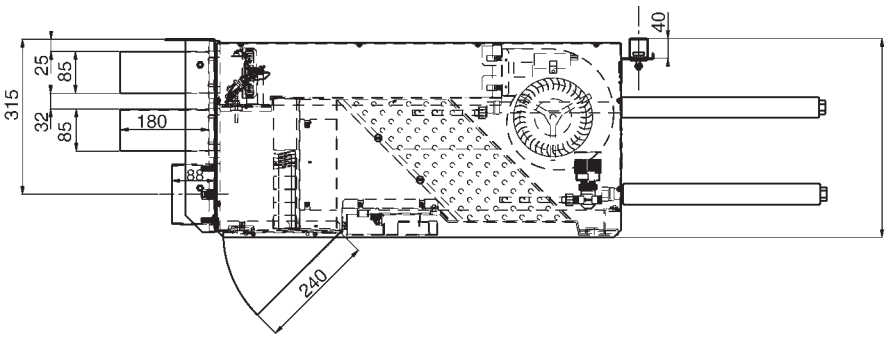

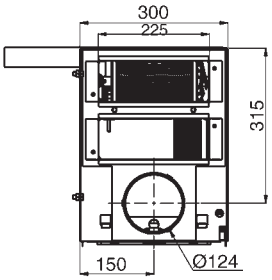

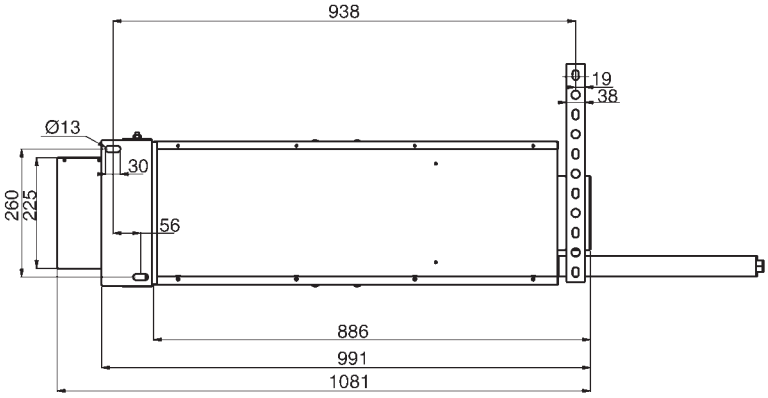

Dimensions are given in mm.

42GR

Nominal cooling capacity 3.1 kW
Nominal heating capacity 2.9 to 3.5 kW

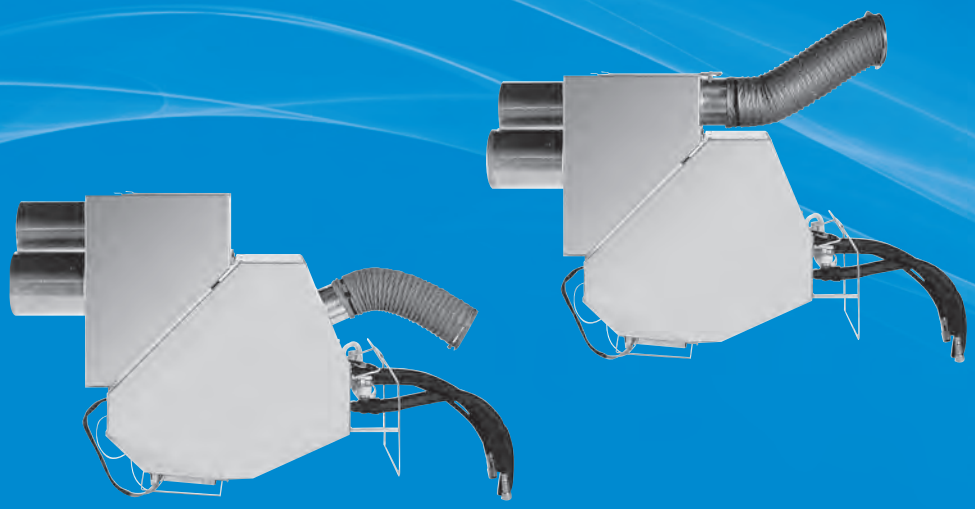

IDROFAN

Two sizes with two-pipe plus electric heater or four-pipe coils, with an air flow range from 103 to 109 l/s, a cooling capacity of 3.1 kW and a heating capacity range from 2.9 to 3.5 kW.

Decentralised compact ducted chilled-water fan coil system, designed for installation in plant rooms. This allows centralised service and maintenance.

Reliable and efficient heating and cooling for office blocks and institutional buildings.

The LEC (low energy consumption) fan motor assembly is available as standard. This direct-drive motor is electronically commutated (EC motor), controlled by a 0–10 V signal and allows precise, simple and quiet unit operation in a wide range of rotational speeds in variation from the original speed.

Physical data

42GR		Size 1.9	Size 2.9
Fan			
Air flow	l/s (m³/h)	97 (350)	139 (500)
Pressure drop	Pa	310	285
Cooling mode			
Total cooling capacity	kW	2.44	3.97
Sensible cooling capacity	kW	1.8	2.81
Water flow rate	l/s (l/h)	0.117 (420)	0.189 (680)
Water pressure drop	kPa	18	15
2-pipe heating mode			
Heating capacity	kW	3.1	4.27
4-pipe heating mode			
Heating capacity	kW	2.63	4.16
Water flow rate	l/s (l/h)	0.0639 (230)	0.103 (370)
Water pressure drop	kPa	4	14
Electric heater			
Low-capacity heating	W	-	-
High-capacity heating	W	1700	1100
Sound levels			
Sound power level	dB(A)	64	66
Sound pressure level*	dB(A)	43	45
NR value		38	40
Power supply	V-ph-Hz	230-1-50	230-1-50
Power input	W	110	147
Current draw	A	0.48	0.64
Dimensions			
Coil inlet/outlet diameters	in	1/2"	1/2"
Length	mm	960	960
Height	mm	962	962
Depth	mm	250	420
Weight	kg	35	50

Based on Eurovent rating standards:
Cooling: Entering/leaving air temperature = 27°C db/19°C wb – entering/leaving water temperature = 7°C/12°C.
Heating (2 pipes): Entering air temperature = 20°C – entering water temperature = 50°C, same water flow rate as in cooling.
Heating (4 pipes): Entering air temperature = 20°C – entering/leaving water temperature = 70°C/60°C.
* Based on a hypothetical acoustic attenuation for the room and the air distribution system of -21 dB(A).

Cooling capacities, kW

42GR19

Water temperatures (°C) Inlet - Outlet		Relative Humidity 50 %														
		Air flow rate l/s (m³/h)														
		28 (100)			56 (200)			83 (300)			97 (350)			111 (400)		
		Dry bulb Air Temperature inlet (°C)														
		27	25	23	27	25	23	27	25	23	27	25	23	27	25	23
6 - 12	TC	0.94	0.78	0.64	1.70	1.40	1.10	2.32	1.91	1.51	2.60	2.13	1.69	2.85	2.34	1.86
	SHC	0.61	0.55	0.49	1.14	1.01	0.89	1.60	1.42	1.26	1.81	1.61	1.43	2.01	1.79	1.59
	TSA	8.7	8.7	8.5	9.9	9.9	9.8	11.0	10.8	10.5	11.4	11.2	10.8	11.9	11.6	11.2
	DE	134	112	91	243	200	157	332	273	216	371	305	242	407	335	266
7 - 12	TC	0.91	0.75	0.60	1.66	1.36	1.07	2.27	1.87	1.47	2.54	2.09	1.65	2.78	2.29	1.82
	SHC	0.60	0.53	0.47	1.12	1.00	0.88	1.58	1.41	1.24	1.79	1.59	1.41	1.98	1.77	1.57
	TSA	9.1	9.1	9.1	10.2	10.1	10.0	11.2	11.0	10.7	11.7	11.4	11.0	12.1	11.8	11.3
	DE	156	129	102	284	234	183	390	322	252	436	360	283	478	394	312
8 - 13	TC	0.83	0.67	0.53	1.51	1.22	0.94	2.08	1.67	1.30	2.32	1.88	1.46	2.54	2.07	1.62
	SHC	0.56	0.50	0.44	1.06	0.93	0.82	1.50	1.32	1.16	1.69	1.50	1.33	1.88	1.67	1.48
	TSA	10.1	10.2	9.9	11.1	11.1	10.8	12.0	11.8	11.4	12.5	12.2	11.7	12.9	12.5	12.0
	DE	143.3	116	92	260	209	161	357	288	223	398	322	252	436	356	279
10 - 15	TC	0.67	0.54	0.42	1.21	0.95	0.73	1.67	1.31	1.03	1.87	1.48	1.17	2.06	1.64	1.30
	SHC	0.49	0.44	0.39	0.93	0.82	0.72	1.32	1.16	1.02	1.51	1.32	1.16	1.68	1.48	1.29
	TSA	12.2	12.0	11.4	13.0	12.8	12.3	13.7	13.4	12.8	14.0	13.6	13.1	14.3	13.9	13.3
	DE	115	92	71	208	163	126	287	226	178	322	254	201	354	282	224

42GR29

Water temperatures (°C) Inlet - Outlet		Relative Humidity 50 %																	
		Air flow rate l/s (m³/h)																	
		28 (100)			56 (200)			83 (300)			111 (400)			139 (500)			167 (600)		
		Dry bulb Air Temperature inlet (°C)																	
		27	25	23	27	25	23	27	25	23	27	25	23	27	25	23	27	25	23
6 - 12	TC	1.03	0.88	0.72	1.95	1.64	1.30	2.81	2.34	1.86	3.58	2.98	2.37	4.28	3.57	2.84	4.91	4.10	3.28
	SHC	0.65	0.59	0.53	1.26	1.12	0.99	1.83	1.63	1.44	2.36	2.11	1.86	2.86	2.56	2.26	3.32	2.98	2.65
	TSA	7.1	7.2	7.3	7.9	8.1	8.2	8.5	8.7	8.7	9.1	9.1	9.1	9.7	9.6	9.5	10.2	10.1	9.8
	DE	147	126	103	279	234	186	401	335	266	513	427	339	612	510	406	702	587	469
7 - 12	TC	0.98	0.83	0.67	1.88	1.57	1.24	2.71	2.25	1.78	3.46	2.88	2.27	4.14	3.44	2.72	4.76	3.96	3.15
	SHC	0.63	0.57	0.50	1.22	1.09	0.96	1.78	1.59	1.40	2.31	2.06	1.82	2.80	2.50	2.21	3.26	2.91	2.59
	TSA	7.9	8.0	8.0	8.4	8.6	8.7	9.0	9.1	9.1	9.5	9.5	9.4	10.0	10.0	9.8	10.6	10.4	10.1
	DE	168	142	115	323	269	213	466	387	305	595	494	390	711	591	468	818	679	541
8 - 13	TC	0.90	0.76	0.60	1.73	1.41	1.09	2.48	2.03	1.57	3.17	2.59	2.00	3.78	3.11	2.41	4.34	3.57	2.78
	SHC	0.60	0.53	0.47	1.15	1.02	0.89	1.68	1.49	1.30	2.18	1.93	1.69	2.64	2.35	2.07	3.08	2.74	2.42
	TSA	9.0	9.0	9.0	9.5	9.7	9.7	10.0	10.1	10.0	10.5	10.5	10.3	11.0	10.9	10.7	11.5	11.2	11.0
	DE	155.4	130	103	297	243	188	427	349	269	544	445	344	650	534	413	747	613	477
10 - 15	TC	0.75	0.60	0.46	1.41	1.11	0.84	2.02	1.59	1.20	2.57	2.02	1.54	3.08	2.43	1.87	3.54	2.80	2.18
	SHC	0.53	0.46	0.41	1.01	0.89	0.78	1.48	1.30	1.14	1.93	1.69	1.48	2.34	2.06	1.81	2.74	2.41	2.13
	TSA	11.0	11.0	10.8	11.6	11.7	11.4	12.0	12.0	11.7	12.4	12.3	11.9	12.8	12.6	12.2	13.2	12.9	12.4
	DE	129	104	79	242	190	144	347	273	206	443	348	266	530	418	322	609	482	375

Legend:

TC - Total cooling capacity, kW
SHC - Sensible heat capacity, kW
TSA - Air discharge temperature, °C
WF - Water flow, l/s

Options/accessories

- Custom-made product on request

Features and advantages

- Two sizes with two-pipe plus electric heater or four-pipe coils, with an air flow range from 103 to 109 l/s, a cooling capacity of 3.1 kW and a heating capacity range from 2.9 to 3.5 kW.
- Decentralised compact ducted chilled-water fan coil system, designed for installation in plant rooms. This allows centralised service and maintenance.
- Reliable and efficient heating and cooling for office blocks and institutional buildings.
- High efficiency EU6 filter.
- Extremely low sound level.
- The LEC (low energy consumption) fan motor assembly is available as standard. This direct-drive motor is electronically commutated (EC motor), controlled by a 0–10 V signal and allows precise, simple and quiet unit operation in a wide range of rotational speeds in variation from the original speed.
- High-pressure centrifugal fans, compatible with air diffusion systems up to 300 Pa.
- Compatible with the 35BD air diffuser range.
- Safe factory-installed electric heater for single or two-stage hot water heating.
- Available with demand control ventilation (DCV) and CO_2 sensor.
- Can be equipped with a UV-PCO IAQ module.
- Low hydraulic pressure drop with a valve mounted, compatible with all chiller pump kits.
- Quick installation with factory-installed options (controls, valves).

35BD linear diffuser (supply and return air)

Electrical data

42GR19

Control (Volts)	I (A)	Cos	Puis. (W)	Qv (m^3/h)	Qv (l/s)	P (Pa)
10V	0.90	0.54	112	492	137	2
	0.90	0.54	112	447	124	106
	0.91	0.53	112	397	110	232
	0.90	0.53	111	351	97	327
	0.91	0.53	112	303	84	418
	0.90	0.54	112	254	71	497
	0.80	0.53	98	197	55	560
9V	0.90	0.54	112	489	136	3
	0.90	0.54	111	448	125	98
	0.90	0.54	112	399	111	224
	0.92	0.53	112	349	97	330
	0.85	0.53	103	301	84	387
	0.78	0.52	93	249	69	413
	0.70	0.51	82	201	56	449
	0.61	0.50	71	154	43	485
8V	0.92	0.53	112	489	136	2
	0.92	0.53	111	449	125	93
	0.84	0.52	101	397	110	184
	0.77	0.51	91	349	97	239

Control (Volts)	I (A)	Cos	Puis. (W)	Qv (m^3/h)	Qv (l/s)	P (Pa)
8V	0.70	0.51	81	301	83	285
	0.63	0.50	72	249	69	319
	0.57	0.49	63	198	55	345
	0.50	0.48	55	152	42	374
7V	0.75	0.51	88	450	125	1
	0.68	0.50	80	399	111	78
	0.62	0.49	70	350	97	141
	0.56	0.49	62	301	84	188
	0.49	0.48	54	249	69	227
	0.43	0.47	48	198	55	251
	0.38	0.47	41	154	43	276
	0.34	0.46	36	110	31	298
6V	0.48	0.55	60	390	108	6
	0.44	0.54	55	350	97	59
	0.39	0.54	48	300	83	112
	0.34	0.54	42	249	69	157
	0.30	0.53	36	202	56	181
	0.25	0.52	30	151	42	194
	0.22	0.52	26	101	28	221
5V	0.30	0.53	37	324	90	2
	0.29	0.52	35	302	84	28
	0.25	0.51	29	249	69	74

legend:

V - Fan motor control voltage supply

42GR19

Control (Volts)	I (A)	Cos	Puis. (W)	Qv ( )	Qv (l/s)	P (Pa)
5V	0.22	0.50	25	201	56	103
	0.19	0.48	21	142	39	123
	0.17	0.45	18	102	28	143
4V	0.18	0.51	21	256	71	3
	0.15	0.50	17	199	55	46
	0.13	0.49	15	149	41	72
	0.11	0.48	13	104	29	82
	0.10	0.48	11	66	18	98
3V	0.11	0.45	11	184	51	0
	0.10	0.42	10	151	42	20

Control (Volts)	I (A)	Cos	Puis. (W)	Qv ( )	Qv (l/s)	P (Pa)
3V	0.09	0.41	8	106	29	38
	0.07	0.40	7	48	13	53
2V	0.06	0.39	5	106	29	2
	0.06	0.39	5	83	23	10
	0.05	0.38	4	33	9	22

legend:

V - Fan motor control voltage supply

42GR29

Control (Volts)	I (A)	Cos	Puis. (W)	Qv (m^3/h)	Qv (l/s)	P (Pa)
10V	1.44	0.55	179	806	224	2
	1.39	0.55	172	763	212	52
	1.37	0.53	165	728	202	94
	1.34	0.54	162	695	193	126
	1.31	0.52	159	590	164	224
	1.29	0.51	150	527	147	271
	1.21	0.53	146	497	138	290
	1.15	0.54	141	459	128	305
	1.02	0.54	128	374	104	352
	0.96	0.52	113	320	89	369
	0.78	0.52	94	183	51	406
9V	1.24	0.51	150	754	209	4
	1.24	0.52	148	716	199	47
	1.18	0.55	147	676	188	92
	1.07	0.53	140	621	173	151
	1.17	0.56	136	562	156	200
	1.05	0.54	127	511	142	239
	1.02	0.55	123	436	121	278
	0.86	0.54	108	373	104	307
	0.74	0.52	89	260	72	335
	0.68	0.52	82	186	52	350
8V	0.81	0.53	101	658	183	0
	0.81	0.53	101	605	168	62
	0.85	0.52	101	557	155	108
	0.86	0.54	105	506	140	153
	0.82	0.56	99	454	126	184
	0.73	0.54	90	404	112	209
	0.67	0.50	81	350	97	236
	0.60	0.52	69	302	84	249
	0.56	0.49	64	253	70	257
	0.48	0.56	56	158	44	273
7V	0.57	0.52	69	563	156	0
	0.56	0.55	69	517	144	48
	0.55	0.52	67	478	133	71
	0.57	0.49	71	431	120	115

Control (Volts)	I (A)	Cos	Puis. (W)	Qv (m^3/h)	Qv (l/s)	P (Pa)
7V	0.52	0.55	63	366	102	145
	0.45	0.53	51	301	84	168
	0.41	0.52	47	252	70	180
	0.39	0.51	45	201	56	188
	0.35	0.49	40	160	45	193
	0.33	0.46	36	124	35	195
6V	0.36	0.49	39	455	126	0
	0.35	0.48	39	395	110	45
	0.35	0.53	40	354	98	72
	0.31	0.53	33	298	83	91
	0.29	0.49	32	254	71	104
	0.26	0.73	28	198	55	113
	0.23	1.00	25	151	42	120
	0.21	1.00	23	119	33	123
5V	0.22	0.91	23	352	98	0
	0.21	1.00	21	300	83	25
	0.18	1.00	19	252	70	42
	0.17	1.00	17	201	56	54
	0.15	1.00	14	142	40	65
	0.14	1.00	12	95	26	69
	0.13	1.00	12	67	19	72
4V	0.16	1.00	15	290	80	1
	0.14	1.00	15	249	69	20
	0.14	1.00	14	205	57	32
	0.13	1.00	12	150	42	43
	0.12	1.00	10	110	31	49
	0.13	1.00	10	82	23	52
3V	0.11	1.00	8	200	55	1
	0.10	1.00	8	184	51	4
	0.09	1.00	7	140	39	16
	0.10	1.00	7	101	28	21
	0.09	1.00	7	86	24	22
2V	0.07	1.00	4	106	29	1
	0.06	1.00	2	74	21	5
	0.07	1.00	4	45	12	8

legend:

V - Fan motor control voltage supply

Air flow/available static pressure data

42GR19

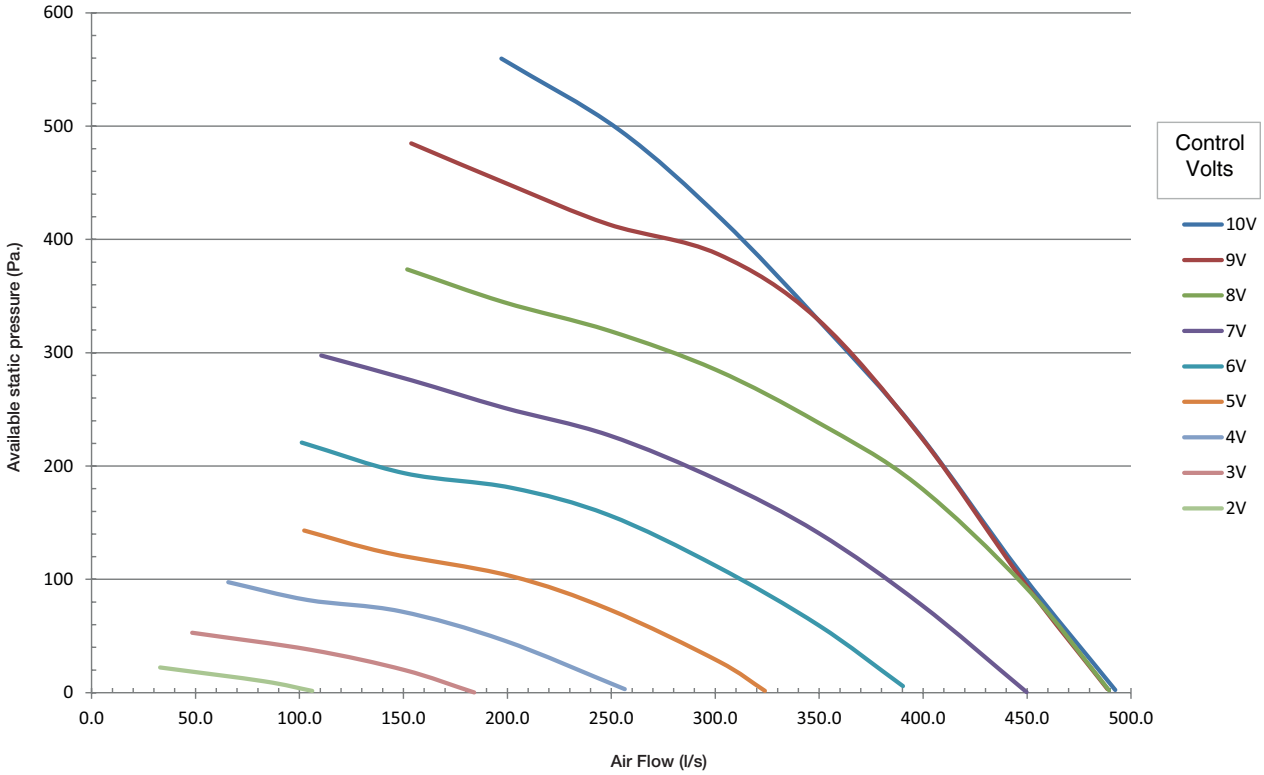

42GR29

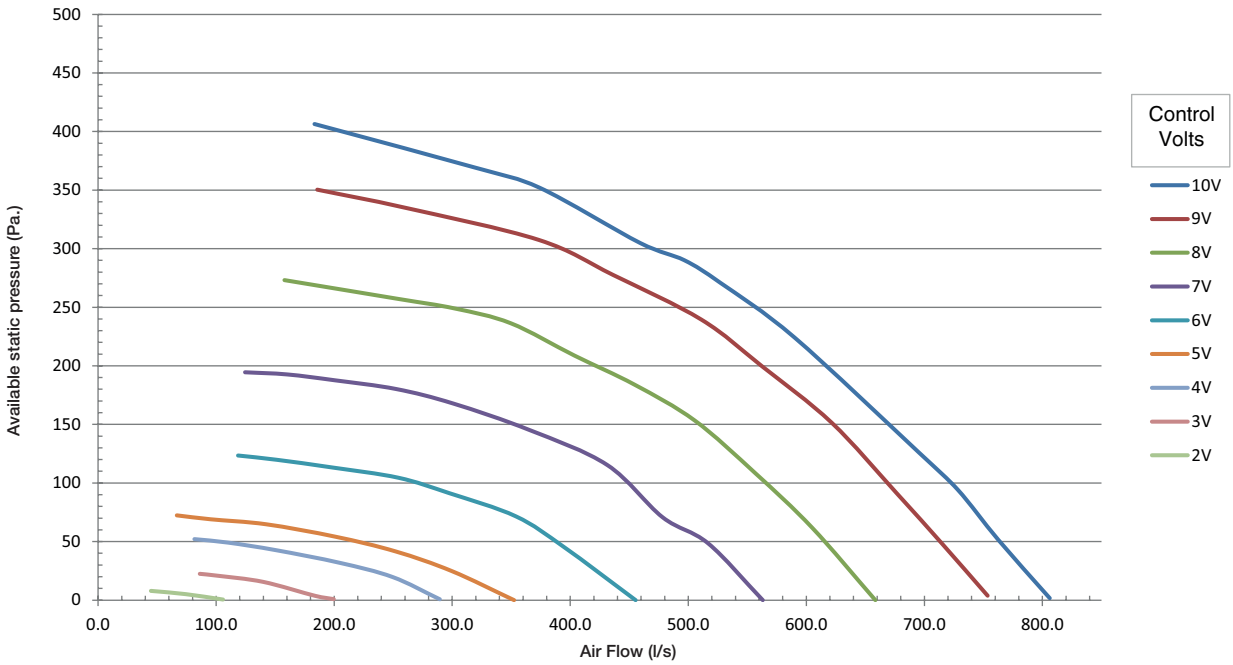

legend:

V - Fan motor control voltage supply

Sound power level

42GR19

		Octave band frequency (Hz)						
Volts	Type	125	250	500	1K	2K	4K	dB(A)
	SUP	49	51	47	60	60	54	64
10V	**RET**	39	43	41	46	49	39	52
	RAD	50	48	51	55	53	46	58
	SUP	48	51	46	59	58	52	62
9V	**RET**	39	42	40	47	46	38	51
	RAD	47	47	50	54	51	45	57
	SUP	47	50	45	58	56	51	61
8V	**RET**	38	42	39	48	44	37	50
	RAD	48	47	49	53	50	44	56
	SUP	44	47	43	56	51	47	58
7V	**RET**	35	38	36	43	39	32	45
	RAD	46	43	47	50	45	40	53
	SUP	41	43	40	54	46	42	56
6V	**RET**	31	34	33	38	34	28	41
	RAD	44	40	44	47	41	35	49
	SUP	36	39	36	48	40	38	49
5V	**RET**	26	29	30	34	27	24	36
	RAD	39	36	41	42	36	33	45
	SUP	32	34	32	41	34	32	43
4V	**RET**	22	23	26	31	21	20	32
	RAD	34	32	37	38	31	29	41
	SUP	28	30	28	35	28	27	37
3V	**RET**	17	20	23	27	17	16	29
	RAD	30	28	33	34	26	24	37
	SUP	25	28	26	32	25	23	34
2V	**RET**	15	18	20	25	15	15	27
	RAD	27	25	30	31	22	20	33

42GR29

		Octave band frequency (Hz)						
Volts	Type	125	250	500	1K	2K	4K	dB(A)
	SUP	66	64	60	50	46	52	61
10V	**RET**	66	54	53	48	50	45	57
	RAD	61	56	56	58	58	51	63
	SUP	65	62	58	48	45	50	60
9V	**RET**	65	52	51	47	48	43	55
	RAD	60	55	54	57	56	49	62
	SUP	64	60	57	47	43	48	58
8V	**RET**	63	50	49	45	46	41	53
	RAD	59	54	53	56	54	46	60
	SUP	61	57	53	44	38	43	55
7V	**RET**	61	48	47	44	43	38	51
	RAD	56	50	50	54	51	42	57
	SUP	58	53	49	42	34	38	51
6V	**RET**	59	45	45	42	39	34	48
	RAD	54	47	48	52	47	37	54
	SUP	54	48	44	38	26	29	46
5V	**RET**	54	39	39	36	30	-	42
	RAD	49	41	42	47	39	-	49
	SUP	49	43	38	34	18	20	40
4V	**RET**	49	34	32	30	21	-	36
	RAD	45	36	36	42	31	-	43
	SUP	41	36	33	28	16	-	34
3V	**RET**	43	31	30	28	18	-	30
	RAD	36	30	31	34	27	-	37
	SUP	34	29	27	22	14	-	28
2V	**RET**	38	29	28	26	15	-	23
	RAD	28	24	25	26	23	-	30

Legend:

V - Fan motor control voltage supply SUP - Supply (dB re = 10-12 W) RET - Return (dB re = 10-12 W) RAD - Radiated (dB re = 10-12 W)

Electrical heater performances

42GR19

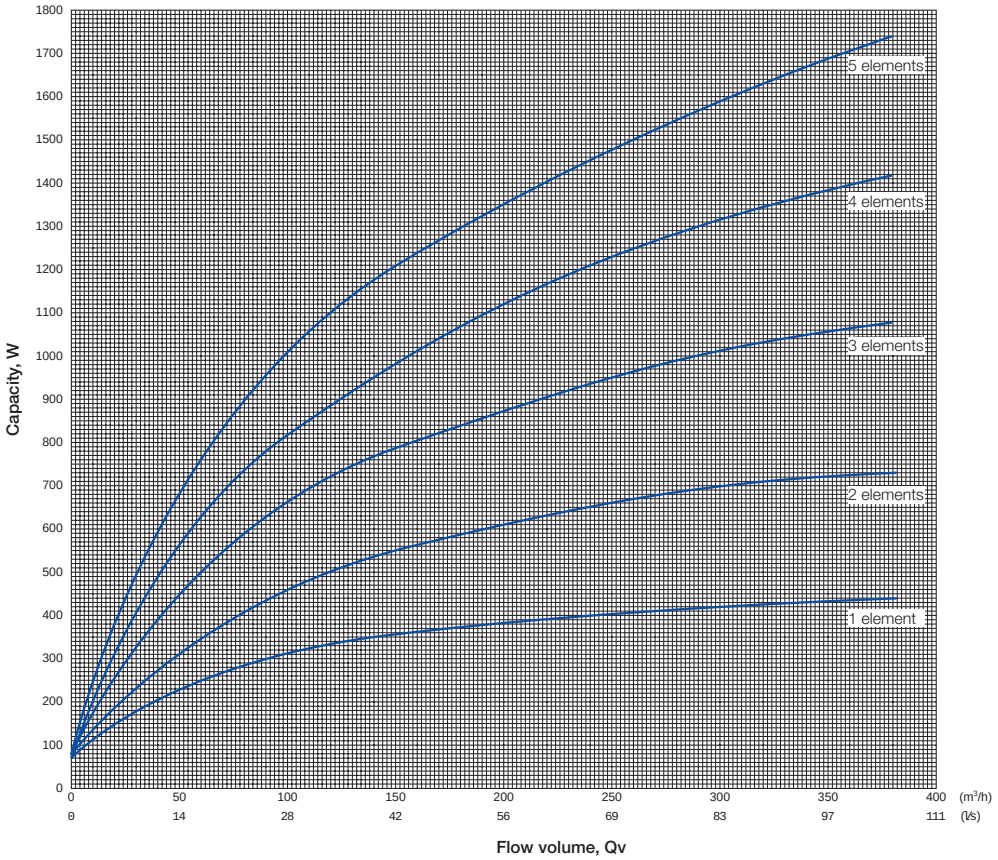

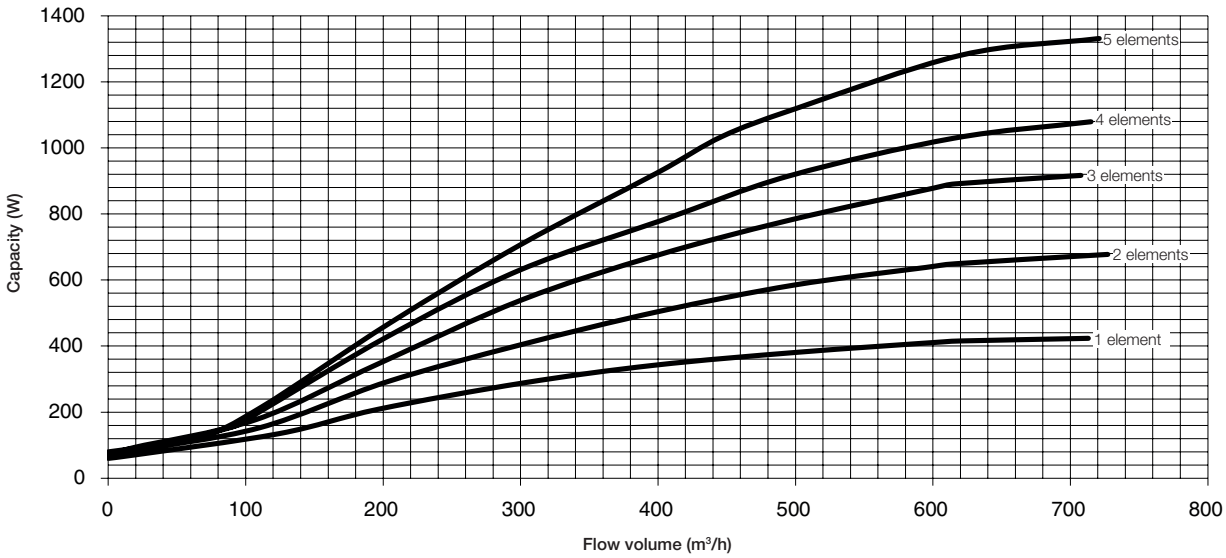

Dimensions/clearances, mm

Standard installation

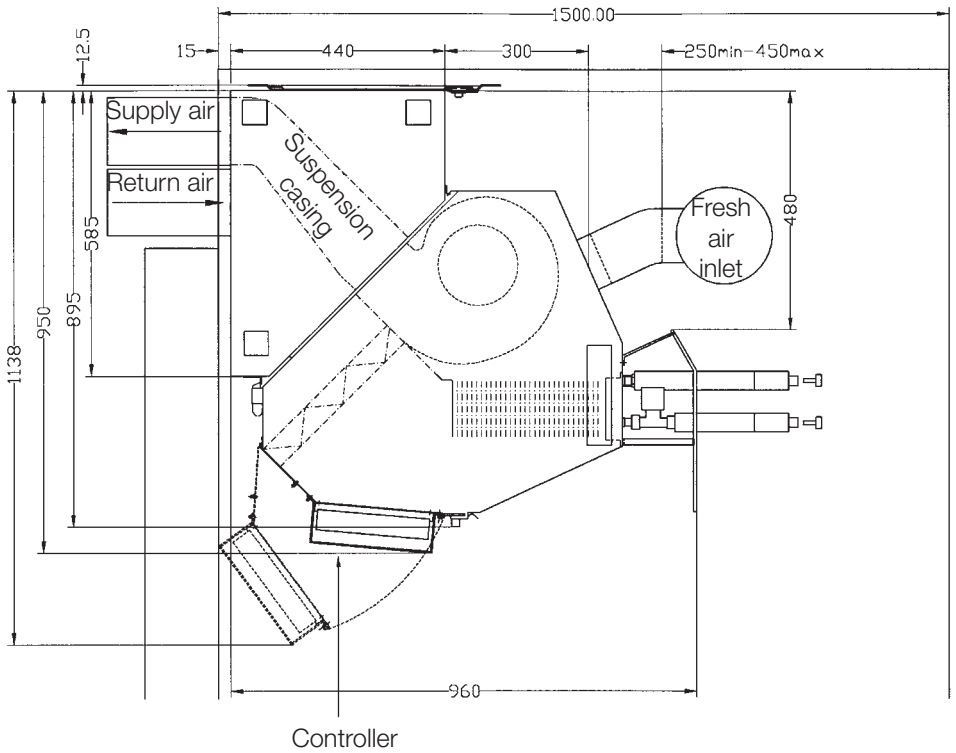

Air distribution with Optimix linear diffusers

Cooling air flow

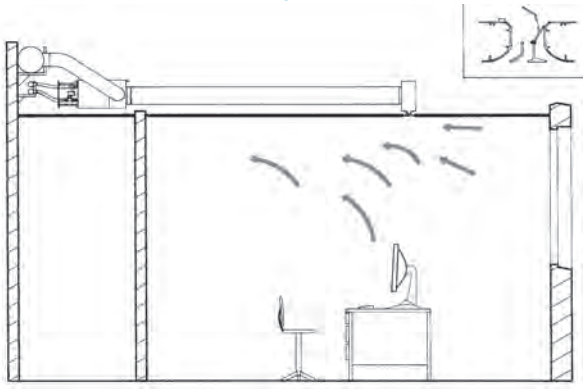

Heating air flow

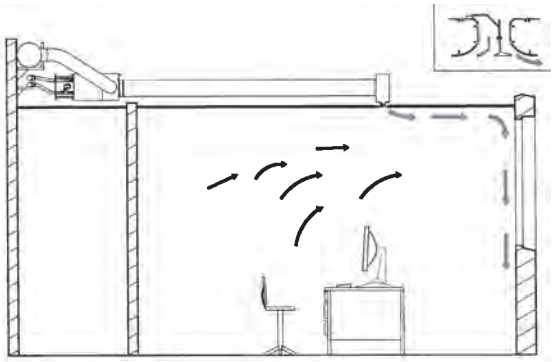

AIR TREATMENT

35BD/SR

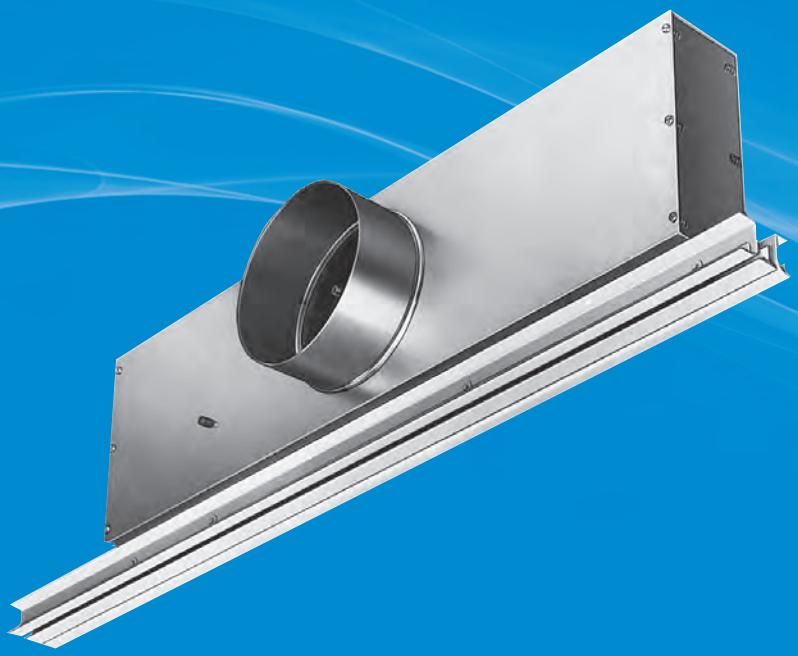

The Moduboot ceiling mounted diffuser is the result of Carrier's unique experience and expertise in the domain of air flow.

Due to the profile of its diffuser, which makes use of the «Coanda» effect, the Moduboot provides an unequalled level of comfort without inconvenience to the occupants.

Physical data

35BD supply or return air

Model	No. of slots	Duct diameter mm	Nominal diffuser length mm	Plenum length mm	Overall height mm
AG	2	159/199	600	473	270.4
	2	159/199	1200	939	270.4
	2	159/199	1500	1235	270.4
AH	2	199			
VH/MH	3	199	600	539	280.8
GH/JH	4	199	1200-1350	1139	280.8
BH/QH	5	199	1500	1439	280.8
CH	5	199			

35BD supply or return air Optimix

Model	No. of slots	Duct diameter mm	Nominal diffuser length mm	Plenum length mm	Overall height mm
SH	3	199			
EH/FH	3	199	1200-1350	1139	280.8
KH/XH	4	199	1500	1439	220.8
UH	4	199			
LH/NH	5	199			

Optimix diffuser profiles

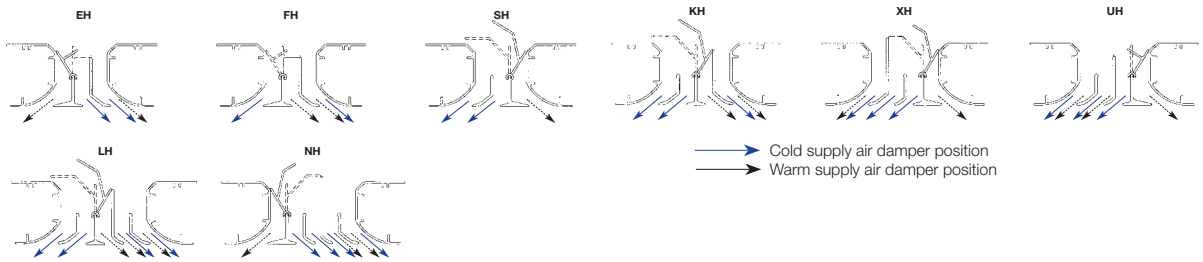

35SR supply/return air

Model	No. of slots	Duct diameter mm	Nominal diffuser length mm	Plenum length mm	Supply section length mm	Return section length mm	Overall height mm
VH/MH	3	159/199*					
GH	4	159/199**	1200-1350	1139	742	388	280.8
JH	4	159/199**	1500	1439	867	563	280.8
CH/QH	5	159/199***	1800	1739	1067	663	280.8
BH	5	159/199***					

* 159 mm for diffuser length 1200-1350 mm only
** 159 mm for diffuser length 1500 mm only
*** 159 mm for diffuser length 1800 mm only

35SR supply/return air Optimix

Model	No. of slots	Duct diameter mm	Nominal diffuser length mm	Plenum length mm	Supply section length mm	Return section length mm	Overall height mm
EH/FH	3	199					
SH	3	199					
XH	4	199	1200-1350	1139	742	388	280.8
UH	4	199	1500	1439	867	563	280.8
KH	4	199	1800	1739	1067	563	280.8
LH	5	199					
NH	5	199					

OWB - One-way blow
TWB - Two-way blow

Other diffuser profiles

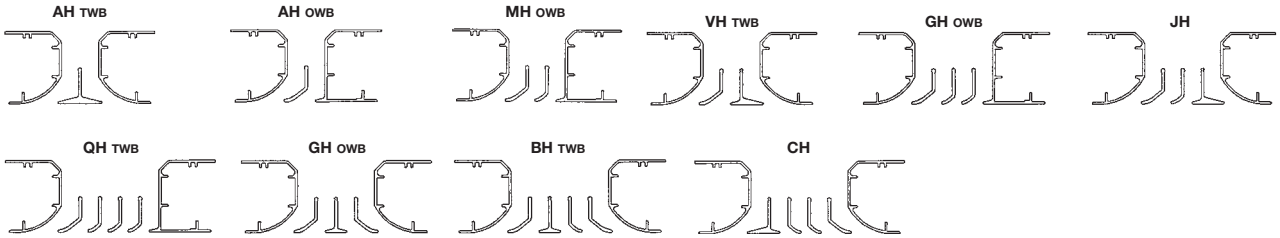

Accessories

- Return air diffusers
- Dummy diffusers
- Diffuser end trim strips
- Alignment channels
- Mounting brackets

Features and advantages

Features

- Linear diffusers with high induction, specially designed to be connected to the Carrier 42GR Air Treatment Modules, 42BJ Individual Comfort Modules, 42EM Atmosphera and 42DW ducted fan coil units.
- Two main types:
  - AG and AH profiles, two slots one-way and two-way blow for cold air diffusion and return air.
  - FH, SH, XH, LH profiles: two to five slots with Optimix damper for cold and warm air diffusion.
- 35BD models have a supply or return air Moduboot, 35SR models have a supply and return air Moduboot.
- 35BD – 19 diffuser profiles with two to five slots, and one-way or two-way blow for cold air diffusion or return air.
- 35SR – 17 diffuser profiles with three to five slots for cold and warm air diffusion.
- Four nominal lengths: 600 - 1200 – 1350 - 1500 mm for the 35BD and 1200 – 1350 – 1500 – 1800 mm for the 35SR.
- Choice of models allows air throw adjustment according to the required air flow.
- Damper position of the Optimix diffuser changes automatically with the primary air temperature.
- Comprises a galvanized sheet metal plenum with 13 mm thick fibreglass acoustic and thermal internal insulation.
- Aerodynamic diffuser design provides uniform air distribution without disturbing draughts.
- From fully cold to fully warm position, the damper operation provides adjusted air diffusion to ensure optimum comfort in the occupied space.

Air Distribution

Air distribution is a fundamental comfort factor.

The Carrier «Moduboot» diffuser uses the «Coanda» effect for air distribution.

The design of the Carrier Moduboot linear diffuser maintains the Coanda effect down to 15% of nominal unit air flow.

At lower air flows, the air velocity is such that the air feels still, and cold air drafts are avoided. At lower air flows it is unlikely that the space would be occupied, since it is mainly the occupants, lighting and other internal gains that make up the space heat load.

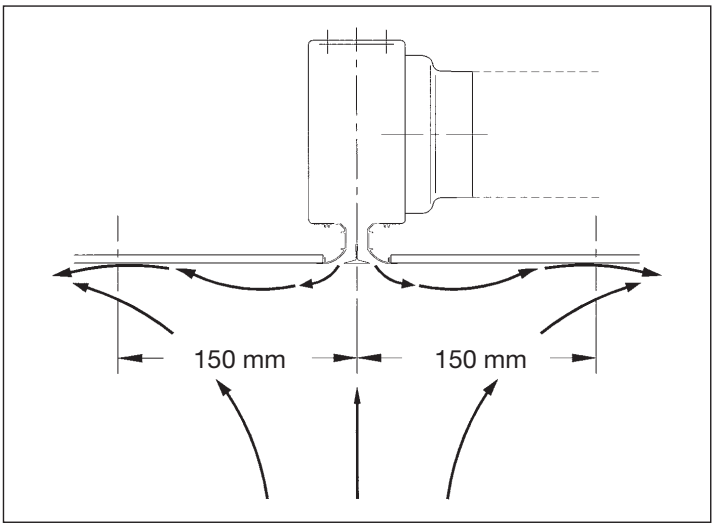

37A

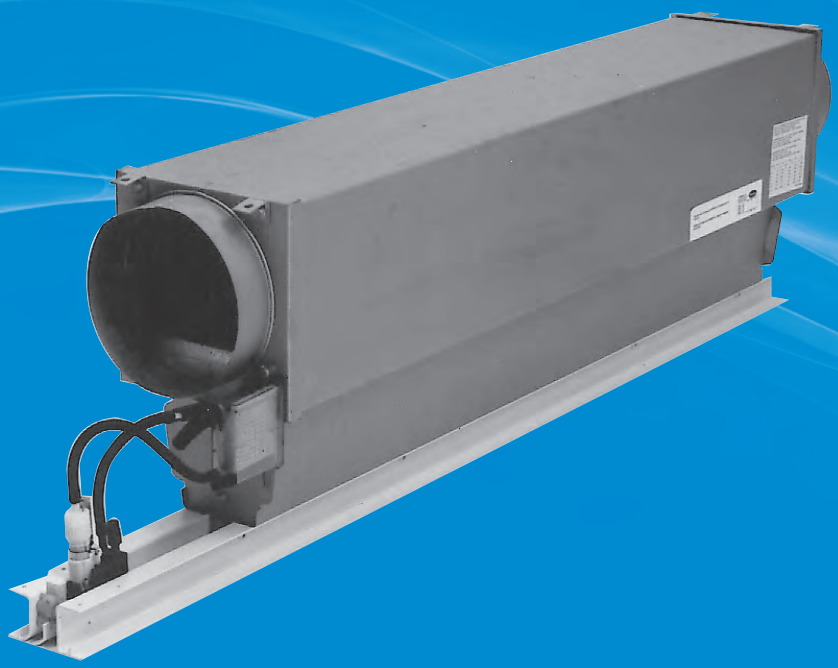

Carrier Moduline air conditioning terminals integrate air distribution and air volume flow control, constant volume or variable volume, in the terminal itself. The prime function of the unit is to control, automatically and accurately, the air flowing from it so that the temperature of the space which it serves stays sensibly constant at the level selected by the occupants.

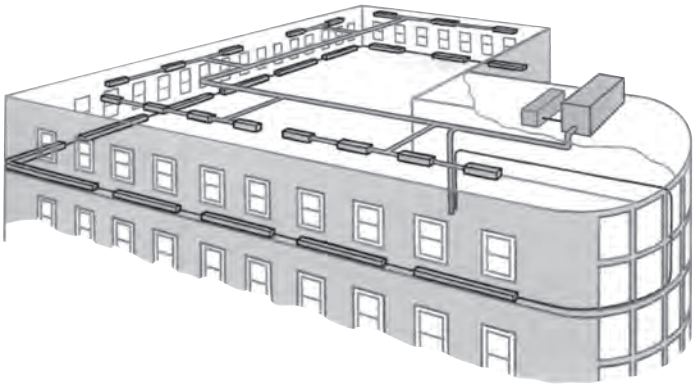

Physical data

37AG – nominal lengths 1200 and 1500 mm (active length 900 mm), air flow 56 l/s				
Nominal plenum height	mm	180	230	280
Plenum size	mm	178 x 178	229 x 229	279 x 279
Overall unit height	mm	327	378	428
Width	mm	181.5	232.5	282.5
Weight	kg	10	12	16

37AG – nominal length 1500 mm (active length 1200 mm) – air flow 74 l/s				
Nominal plenum height	mm	180	230	280
Plenum size	mm	178 x 178	229 x 229	279 x 279
Overall unit height	mm	327	378	428
Width	mm	181.5	232.5	282.5
Weight	kg	12	15	19

37AH – nominal lengths of 1200 and 1500 mm (active length 900 mm) – air flow 97 l/s			
Nominal plenum height	mm	230	280
Plenum size	mm	229 x 229	279 x 279
Overall unit height	mm	388	438
Width	mm	232.5	282.5
Weight	kg	15	16

37AS – nominal lengths of 1200 and 1500 mm (active length 900 mm) – air flow 56 l/s		
Nominal plenum height	mm	127
Plenum size	mm	127 x 178
Overall unit height	mm	170
Width	mm	288
Weight	kg	11.5

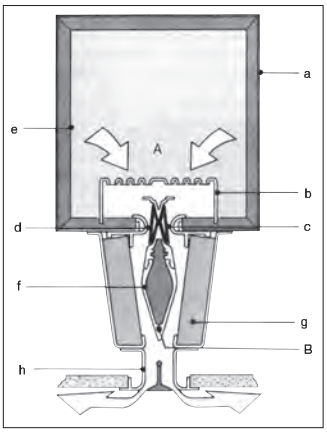

Moduline unit in cross section

37AG: Air flow range: 19-173 l/s

37AH: Air flow range: 47-236 l/s

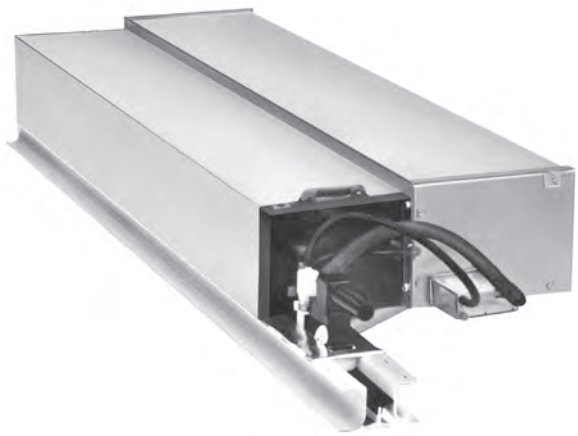

37AS: Air flow range: 19-78 l/s

Accessories

- One- or two-way T-bar or continuous, 2-way return air diffuser (AG, AH)
- One- or two-way T-bar or continuous dummy units (AG, AH)
- End trimming piece (all)
- Alignment channels (AG, AS)
- Plastic blanking piece (all)
- Constant volume control kit (all)
- Variable air volume controller with Moduline thermostat (all)
- Variable air volume controll with room thermostat (all)
- Minimum air flow controller
- Warm-up switch
- Various suspension accessories
- Various plenum accessories
- Various control accessories

Features and advantages

Features

- Three types of terminals with nominal air flows from 19 to 236 l/s.
- Wide range of capacities, weights and physical dimensions.
- Air distribution and air volume flow control, constant or variable volume are integrated in the terminal itself.
- One-piece, self-contained units, can be used in any type of air treatment unit: ducted central station air handlers or packaged indoor or outdoor air conditioners.
- Conditioned air is distributed through linear diffuser slots in the ceiling.
- Available in sizes to match standard false ceiling modules.
- Galvanised steel plenums (a).
- Perforated sheet steel distribution plate (b).
- Neoprene bellows which expand and contract with the control pressure (c).
- Felt-coated bellows stops control the noise level (d).
- Thermal and acoustic insulation (e).
- Aerodynamically profiled central air guide (f).
- Acoustic insulation, attenuates air flow noise (g).
- Air diffuser assembly of extruded aluminium (h).

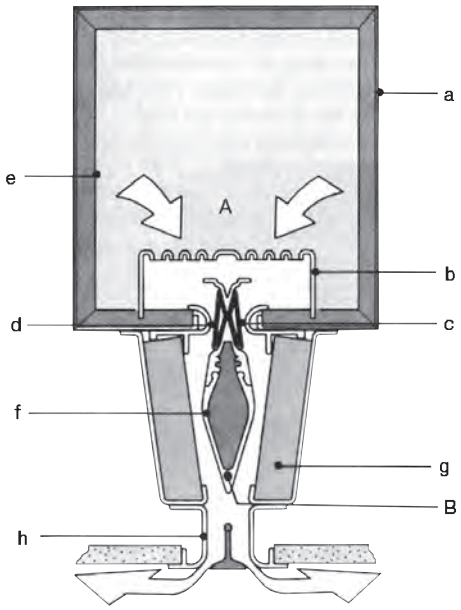

39CQ

NEW

The modular Ultra-Slim AHU is the guaranteed perfect solution

Ideal for a compact installation

Available in single-flow or aligned or adjacent dual-flow versions

The 39CQ air handling unit (AHU) is a modular ventilation unit, which can be configured to meet all your requirements whilst complying with current standards.

It is available in several versions: single-flow, aligned dual-flow, adjacent dual-flow.

The 39CQ AHU is used for fresh air change, air recirculation, air extraction and air handling using its filtration, heating, cooling, recovery and ventilation functions…

There are three different installations in the range, so it can be adapted to meet your needs:

- horizontal ceiling-mounted version, accessed from underneath,
- horizontal floor-mounted version, accessed from the top,
- vertical wall-mounted version, accessed via the front.

It is available in three sizes to meet all your needs, able to handle air flows from 1 000 to 6 000 m^3/h.

At 400 mm thick, it is ultra compact and can be fitted into the tightest of spaces.

This range is particularly well-suited to tertiary buildings:

- administration, offices,
- education facilities, libraries, community centres,
- cafés, hotels, restaurants,
- shopping centres, nursing homes, healthcare facilities,
- collective housing.

All installations requiring ventilation.

Range

The 39CQ range comprises 3 sizes from 1000 to 6000 m³/h.
There are four standardised lengths of casing, adapted to the configuration and options selected.
The AHU will therefore comprise one or several casings, depending on your selection; 610, 830, 1100 and 1400 mm modules.

39CQ		025	040		060
Assembly		Ceiling-mounted (C), Floor-mounted (F), Vertical (V)			
Width/Height		750*400	1310*400		1880*400
Nominal air flow (m³/h) (Speed: 3.1 m/s across finned layer)		2000	4000		6000
" Asynchronous motor NPL technology "	Plug fan	1	1	2	2
	Electric motor	1	1	2	2
	Available power	0.55 kW - 4-pole/1.1 kW - 2-pole/1.4 kW - 2 pole			
	Number of inverters	1	1	1	1
" EC motor EBM technology "	Plug fan	1	1	2	2
	EC motor	1	1	2	2
	Available power	1 kW			
Pleated filters		G4 / M5 / F7 HEE / F9 HEE			
Opacimetric filters (Short flexible pockets)		M6 / F7			
Opacimetric filters (Rigid pockets)		M6 / F7 / F8 / F9			
Hydraulic heating coil		1/2/3 rows	1/2/4 rows		1/2/4 rows
Hydraulic cooling coil		3/4/6 rows			
Direct expansion cooling oil		3/6 rows			
Electric heating coil		15 kW	24 kW		33 kW
Adjacent plate heat exchanger		Yes	Yes		No

Accessories and options

- 2-channel mixing box: 3 air flow positions available
- 3-way mixing box
- Angled or straight plenum
- Sound attenuator
- Adjacent plate heat exchanger (sizes 025 and 040 only)
- Control
- Surface-mounted electric heater unit, or delivered unassembled
- Control by factory preprogrammed controller, algorithm created in-house
- Hand-held cabled micro-terminal
- Fault summary contact
- Control by constant flow/constant pressure/CO_2
- Pressure and temperature sensors, depending on the selection
- Numerous options and functions available

Description

- Casing
  - Double-skin panels made from sheet steel, galvanised on both sides, thickness 8/10 mm
  - RAL 7035 lacquer coated finish on external panels
  - M0/A1 fire rating
  - Mineral wool, thickness 25 mm
- Connection and utilities

Hydraulic connection possible on the right or left (to be specified when ordering).

The access doors are positioned according to the choice of model:

- horizontal ceiling-mounted model: access doors located underneath the unit,
- horizontal floor-mounted model: access doors located on top of the unit,
- vertical wall-mounted model: access doors on the front of the unit.

- Damper
  - Uncased external damper
  - Damper in choice of sealing class 1 or 3, as per EN 1751
  - Damper thickness 110 mm and height 310 mm
  - Optional servomotor
- Filtration
  - Filter cell with universal dimensions
  - Three filtration stages possible per air flow rate
  - Pleated filters in efficiency class G4, M5, F7 and F9 HPE
  - Short bag filters in efficiency classes M6 to F7
  - Rigid bag filters in efficiency classes M6 to F9
  - Pressure tapping as standard on each filtration stage
  - Option, pressure switch, pressure gauge, …

Heat exchange coil

- Hydraulic coil
  - Copper tubes, aluminium fins
  - Choice of 3 coil sizes for each AHU size
  - Antifreeze thermostat with optional automatic reset
  - Stainless condensate drain pan
- Evaporator coil
  - Copper tubes, aluminium fins
  - Choice of 3 coil sizes for each AHU size
  - Stainless condensate drain pan

- Electric heater
  - Shielded resistors in scrolled finned pipes
  - 2 high-limit safety thermostats: one automatic and one manual reset
  - Anti-radiation screen, depending on the upstream and downstream elements

Output power supplied by the electric heaters			
AHU size	Main casing	Additional box	
	2 stages	2 stages	4 stages
25	2 * 7.5 = 15kW	2 * 7.5 = 15kW	4 * 7.5 = 30kW
40	2 * 12 = 24kW	2 * 12 = 24kW	4 * 12 = 48kW
60	2 * 16.5 = 33kW	2 * 16.5 = 33kW	4 * 16.5 = 66kW

Control

- Electrics box for power, control and internal regulation of the unit, comprising as standard:
  - 3-ph 400 V power supply + Earth,
  - Main disconnect switch,
  - Protected transformer,
  - Protection and control of all electrical components by a circuit breaker and contact switch,
  - Peripheral options and power terminal block.

Ventilation

- «Plug Fan» type direct drive FMA.
- 1 or 2 FMA for each air flow rate, depending on the size and conditions.
- Plug fan combined with a motor at the end of the shaft.
- AC motor with optional frequency inverter.
- EC motor (electronically commutated motor with built-in variable speed control).

AIR COMPACT		25	40		60
Assembly		Ceiling- / Floor-mounted / Vertical			
Nominal air flow (m^3/h) (speed: 3.1 m/s across finned row)		2 000	4 000		6 000
"Asynchronous motor NPL technology"	Plug fan	1	1	2	2
	Electric motor	1	1	2	2
	Available power	0.55 kW - 4-pole/1.1 kW - 2-pole/1.4 kW - 2-pole			
	Number of inverters	1	1	1	1
"EC motor EBM technology"	Plug fan	1	1	2	2
	EC motor	1	1	2	2
	Available power	1 kW			

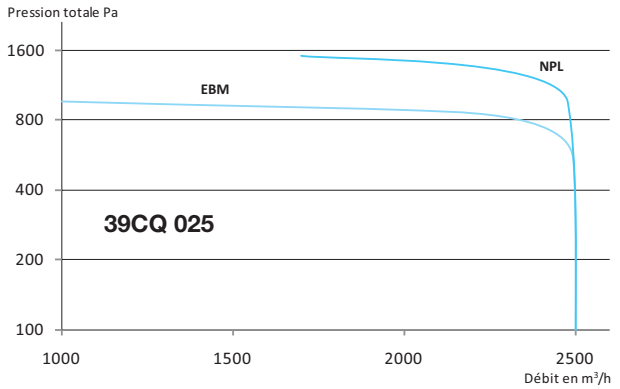

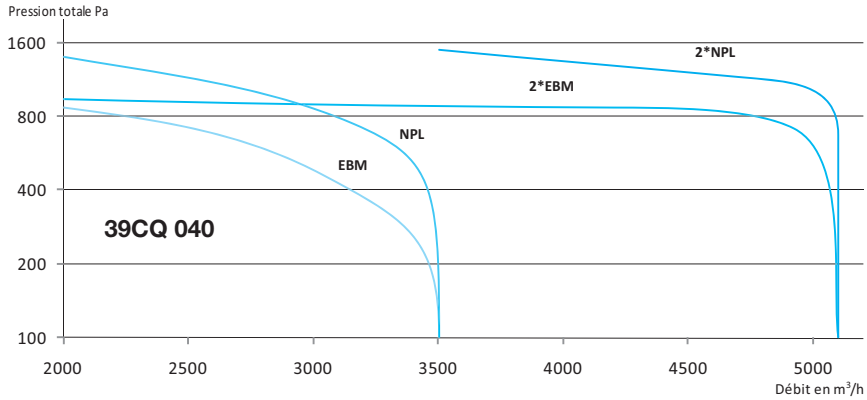

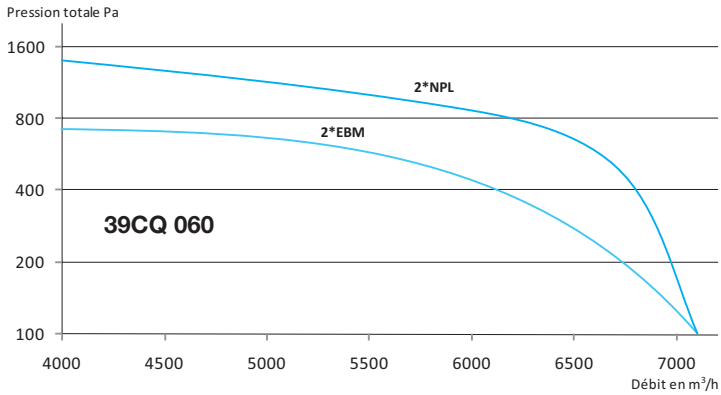

Space requirements and dimensions

DIMENSIONAL SPECIFICATIONS			
AHU size	25	40	60
External dimensions (in mm)	750 * 400	1 310 * 400	1 880 * 400
Casing length (in mm)	610 – 830 – 1 100 – 1 400: Four standardised lengths of casing, automatically adapted to the components and options selected		

610 mm module ▶ 1 x 540 mm door
830 mm module ▶ 1 x 595 mm door
1100 mm module ▶ 1 x 595 mm door + 1 x 435 mm door
1400 mm module ▶ 1 x 595 mm door + 1 x 735 mm door

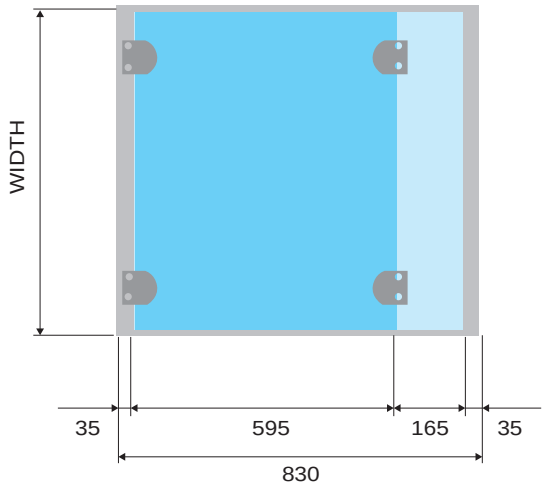

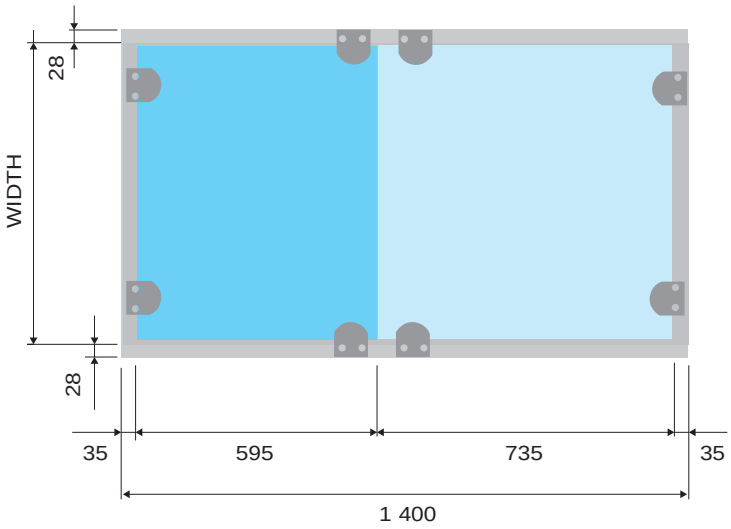

AIR TREATMENT

Air connection

- Air connection AHU intake
- AHU discharge
- Mixing and plate heat exchanger

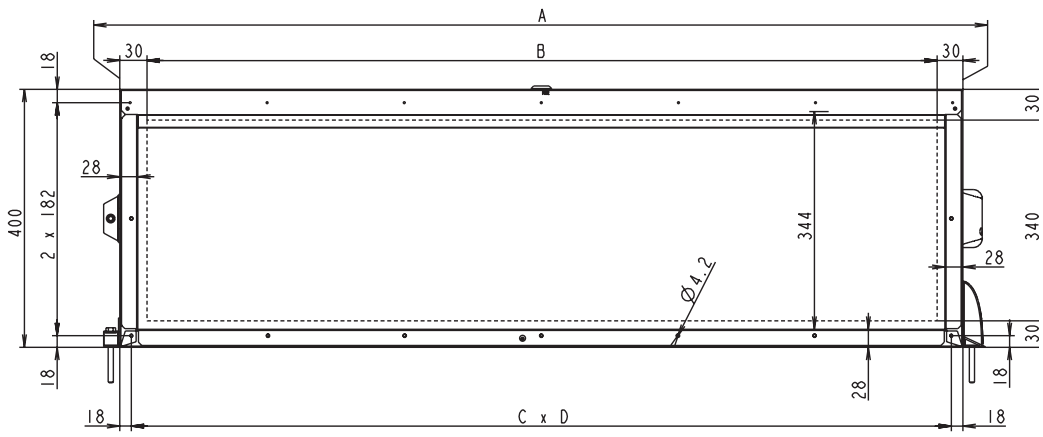

	A	B	C	D
39CQ 25	750	690	3	238
39CQ 40	1 310	1 250	6	212.3
39CQ 60	1 880	1 820	8	230.5

Examples of compositions

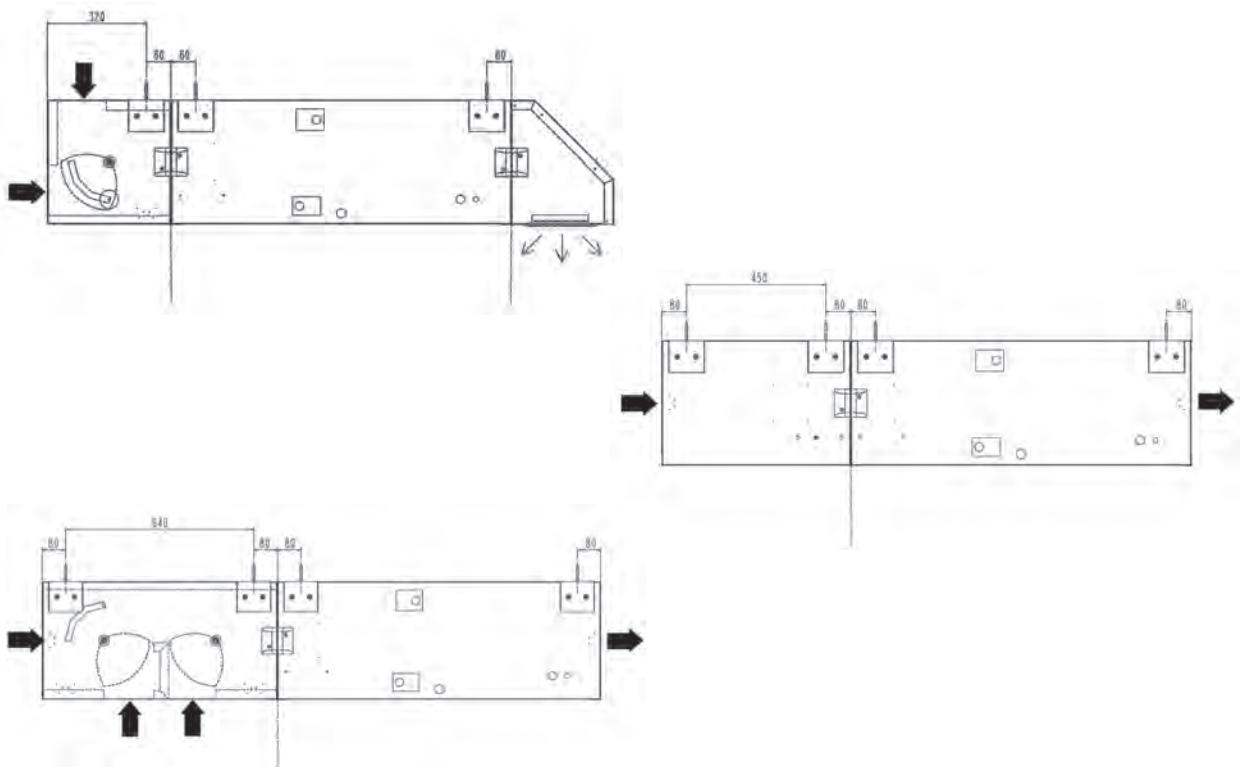

39HX

NEW

Plug & play unit (built-in control)

Class A across entire range

Classic/Vertical/ ceiling-mounted dual-flow units

High-efficiency heat recovery unit

High performance plug fan

39HX is a plug & play dual-flow ventilation unit equipped with a highly efficient heat recovery unit with plug fans and high performance EC motors, designed to meet all the requirements of recent thermal regulations.Unit supplied ready to use, prewired, preprogrammed in the factory and supplied with a remote control.

It draws clean, fresh air indoors using, on average, 80% less energy than that needed for air conditioning (cooling and heating).

These machines are designed for use in the following applications:

- Administrative buildings, offices
- Bars, hotels, restaurants
- Nursing homes, healthcare facilities
- Shops
- Collective housing
- Education facilities, libraries, community centres

➪ All facilities where ventilation is required.

E model: 9 sizes, air flow from 300 to 18 000 m³/h.
Floor-mounted horizontal unit with horizontal air flows and air connections on the sides.

C model: 5 sizes, air flow from 300 to 6 600 m³/h. Floor-mounted horizontal unit with horizontal air flows and air connections on the sides.

V model: 3 sizes, air flow from 300 to 2 600 m³/h. Floor-mounted vertical unit with vertical air flows and air connections on the top.

H model: 3 sizes, air flow from 300 to 1 900 m³/h.Ceiling-mounted horizontal unit with vertical air flows and air connections on the sides.

Range

Classic 39HXC & 39HXE

Models	Nominal flow rate (m³/h)	Max.* power (kW)	Max current* (A)	Voltage (V)
010	1000	1.43	6.2	1-Ph 230
020	2000	2.50	3.6	3-Ph 400
030	3000	3.82	5.5	
040	4000	4.23	6.1	
050	5000	4.23	6.1	
060	6000	6.03	8.7	
075	7500	6.03	8.7	
100	10000	12.06	17.4	
150	15000	15.45	22.3	

Vertical 39HXV

Models	Nominal flow rate (m³/h)	Max.* power (kW)	Max current* (A)	Voltage (V)
010	1000	1.43	6.2	1-Ph 230
015	1500	2.50	3.6	3-Ph 400
020	2000	2.50	3.6	

Ceiling-mounted 39HXH

Models	Nominal flow rate (m³/h)	Max.* power (kW)	Max current* (A)	Voltage (V)
007	700	1.43	6.2	1-Ph 230
012	1200	1.43	6.2	
016	1600	2.50	3.6	3-Ph 400

* These values are given as a guide for a dual-flow unit fitted as standard, without standard option (electric heater).

Description

- Casing
  - Double-skin panels made from steel sheets, galvanised on both sides, thickness 8/10 mm
  - RAL 7035 grey lacquer coating finish on external panels
  - M0/A1 fire rating
  - Mineral wool, thickness 50 mm
- Filtration
  - M5 HEE, F7 HEE, F9 HEE filters
  - Filter cells kept compressed by a special system to ensure a leaktight seal
  - Filter fouling value monitored by analogue sensor and displayed by controller
- Ventilation
  - Plug fan driven by an electronically commutated motor with built-in speed control
- Heat recovery units

Depending on its arrangement, two different highly energy-efficient heat recovery systems are available:

- Counter-flow plate heat exchanger with motorised partial by-pass (H, V and C models)

➪ Efficiency greater than 80% across the range of air flows.

- Rotary heat exchanger equipped with speed control (E model)

➪ Efficiency greater than 80% at nominal flow rate.

- Hydraulic coil
  - Copper pipes, aluminium fins
  - Coil can be integrated or additional (cased)
  - With the accessory fitted, 2 or 3-way control valve and 0-10V actuator controlled by 39HX Control for setpoint accuracy
  - Galvanised steel condensate drain pan (cooling coil or mixed coil only)
- Electric box

Electric box for power, control and internal regulation of the unit, comprising as standard:

  - Power supply (3-Ph/400 V/Earth or 1-Ph/230 V/Earth).
  - Main disconnect switch
  - Protected transformer
  - Protection and control of all electrical components by a circuit-breaker and a contact switch
  - Peripheral options and power terminal block
  - Control by factory pre-programmed CAREL pCO3 PLC
  - Hand-held cabled micro-terminal
  - Fault summary contact
  - 3 temperature sensors
  - 4 pressure sensors
- Electric heaters
  - High-limit safety thermostat with automatic and manual reset
  - Control by 2-stage on/off operation fully controlled by 39HX Control
- Accessories
  - Damper with airfoil blades driven by an on/off spring-return actuator
  - Flexible sleeve
  - Adjustable feet
  - CO_2 air quality sensorRoof
  - Canopy
  - Mixing section
  - Indoor environment switch
  - ModBus RTU, LON, KNX, ModBus TCP, BACnet IP communication card

Models & sizes	Power (kW)	Current (A)	Voltage (V)
C 010 & E 010 **V 010** **H 070 & H 012**	4.5	20	1-Ph 230
V 015 (additional casing) **H 016 (additional casing)**	7.20	11	3-Ph 400
V 015	8.1	12	
C 020 & E 020	10.8	16	
C 030 & E 030	12.6	19	
C 040 & E 040	16.8	25	
E 050	19.8	29	
C 060 & E 060	22.8	34	
E 075	31.2	46	
E 100	N/A	N/A	
E 150	N/A	N/A	

Specifications	Class
Mechanical strength	D2
Airtightness	L2
Filter by-pass leak	F9
Thermal transmission	T3
Thermal bridge	TB2

Control

39HX features, as standard, an electric box equipped with a factory-programmed PLC and a hand-held micro-terminal.

39HX CONTROL	Control function			Included	Options*
Fan timer programming	Integrated clock: management in series	4 events per year, and per week and per day		X	
Safety	Frost protection	By fresh air temperature control		X	
		By exhaust air flow pressure on heat recovery unit delta control (pressure sensor)			X
	Monitoring of sensor status			X	
	Monitoring operation values (thresholds)			X	
	Operating control of EC fan motor assemblies via a fault summary contact			X	
	Control of filter fouling (automatic calculation of "Dirty filter" and "Blocked filter" alarm thresholds)			X	
	Main and ordinary fault summary			X	
	Fire monitoring (potential free (dry) contact available (normally closed))			X	
Alarms	Management of alarms and log (100)			X	
Control mode	Control of return air or supply air temperature			X	
	Regulated temperature control based on outdoor temperature			X	
	Control of room temperature with a room terminal (Th-Tune)				X
Hot air and/or cold air production	Gradual action on the 2- or 3-way control valve on the hydraulic coil				X
	Gradual action on the electric heater TRIAC				X
	On/Off action on the various stages of the electric heaters				X
Free cooling operation	Rotary heat exchanger stop (E model)			X	
	Open by-pass on counter-flow plate recovery unit (V, H & C models)			X	
Night cooling function	Rotary heat exchanger stop (E model)			X	
	Open by-pass on counter-flow plate recovery unit (V, H & C models)			X	
Morning heating operation	Opening level control of mixing bypass (E model)				X
ECO recirculation operation	Opening level control of mixing bypass (E model)				X
Optimisation of output	Variation of the rotation speed of the rotary recovery unit (E model)			X	
Configuration of the air flow rate	2 air flow rate setpoints per air flow			X	
	Display of the air flow rate			X	
	Overpressure/negative pressure management			X	
Constant flow rate operation	Keeps the air flow rate constant regardless of how fouled the filters are			X	
Modulation of flow rates operation	Single zone	Signal 0-10 V	CO_2 sensor		X
		Contact	Presence contact		X
			External contact		X
	Multi zone	Air supply duct constant pressure operation			X
Communicating mode	Management by CMS	ModBus RS485 protocol			X
		LON protocol			X
		KNX protocol			X
		ModBus TCP/BACNET IP protocol			X
Miscellaneous	Languages supported (French/English/German/Dutch/Spanish/Italian)			X	
	Integrated temperature sensors (*3: fresh air supply and extraction, exhaust air extraction)			X	
	Integrated pressure sensors (*4: fresh air and exhaust air filter fouling level, fresh air and exhaust air fan)			X	
	Damper control				X
	Information provided to the user via the hand-held micro terminal			X	
	Contact for controlling the pumps for the hydraulic coils (with operating control)			X	
	Contact for controlling an external outdoor heat production system (boiler, etc.)			X	
	Contact for controlling a humidifier			X	
	Electric heater load shedding input			X	

Option*: Requires the component to be selected as an option damper, coil, CO_2 sensor, etc.

Classic 39HXE model performance

F5 exhaust filter, F7 intake filter, duct pressure: 200 Pa, heat recovery unit conditions: 0°C/90% & 20°C/50%

Operating pressure = F (Flow)

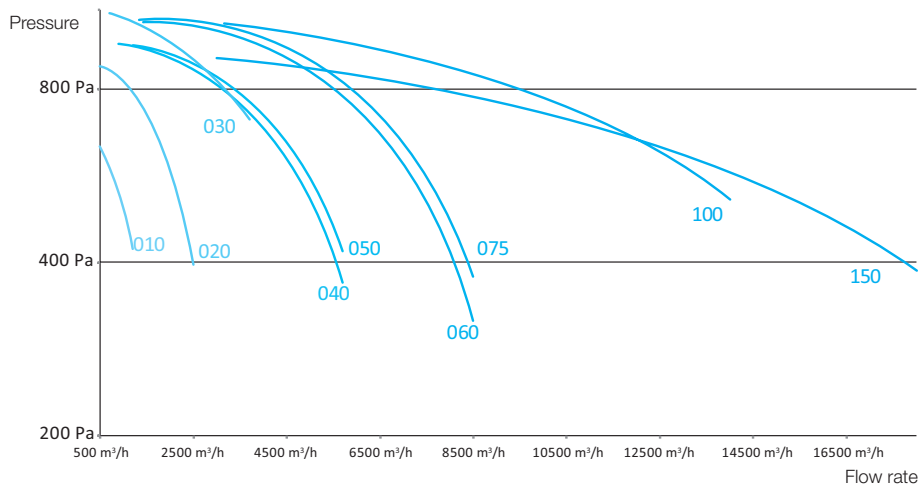

Performance recovery = F (Flow)

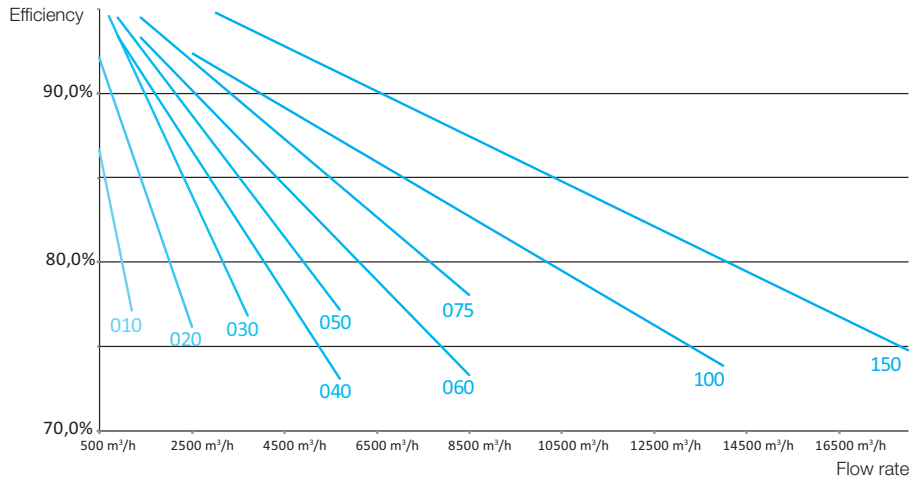

SFPv AHU = F (Flow)

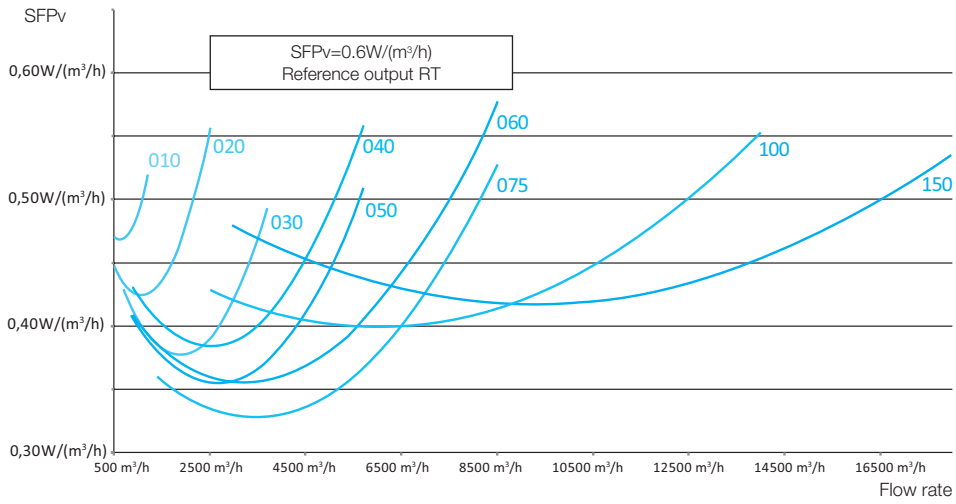

Classic 39HXC model performance

F5 exhaust filter, F7 intake filter, duct pressure: 200 Pa, heat recovery unit conditions: 0°C/90% & 20°C/50%

Operating pressure = F (Flow)

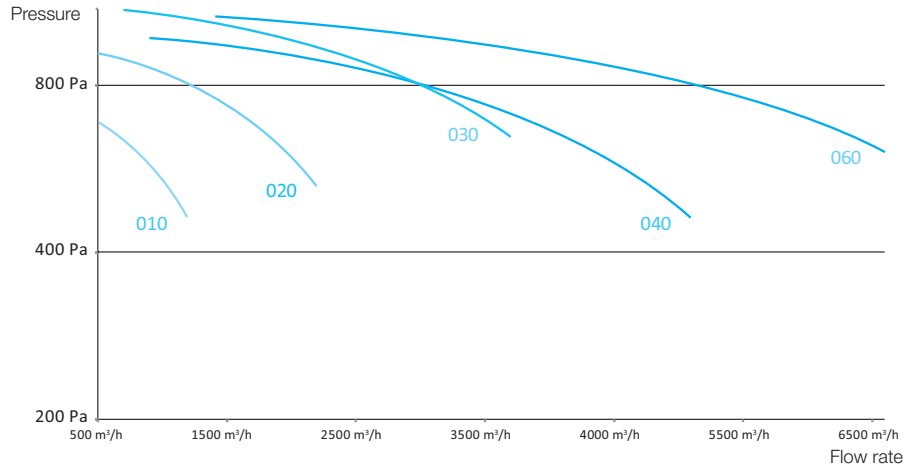

Performance recovery = F (Flow)

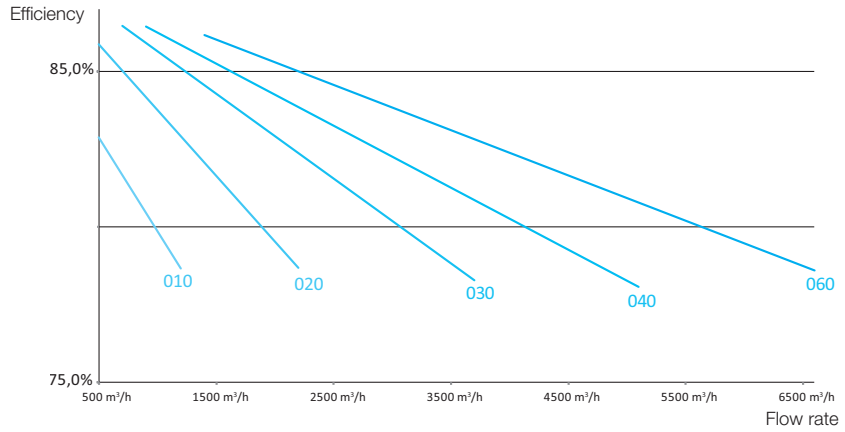

SFPv AHU = F (Flow)

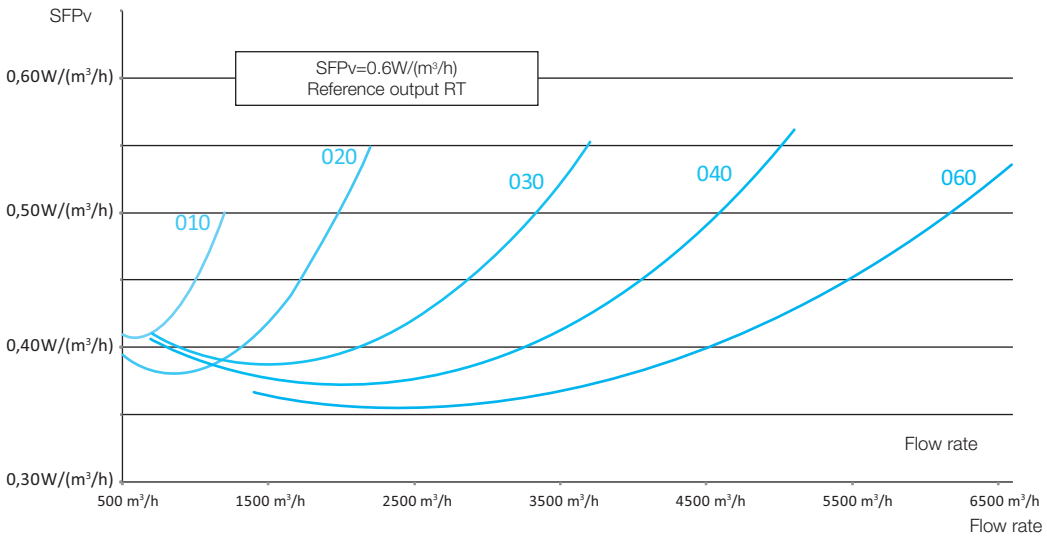

Vertical 39HXV model performance

F5 exhaust filter, F7 intake filter, duct pressure: 200 Pa, heat recovery unit conditions: 0°C/90% & 20°C/50%

Operating pressure = F (Flow)

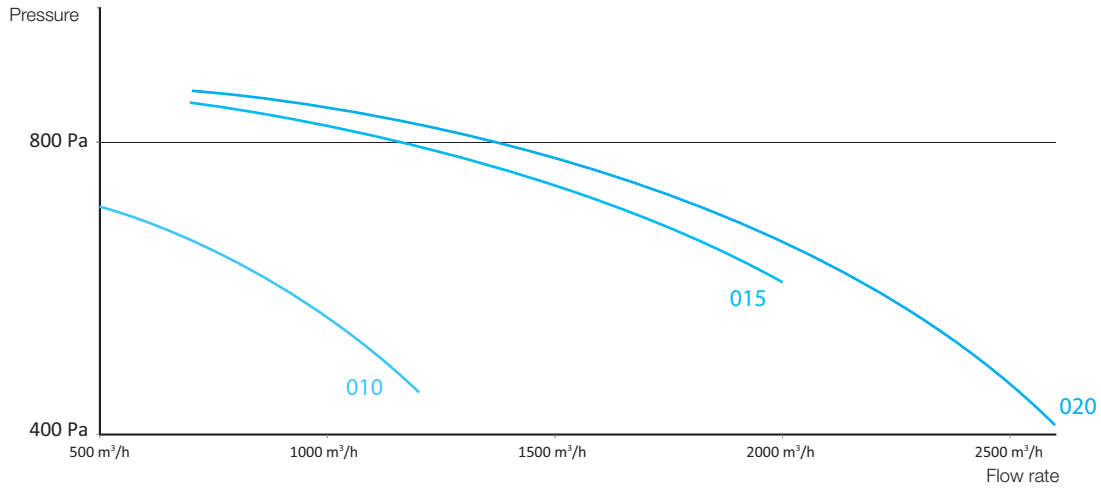

Performance recovery = F (Flow)

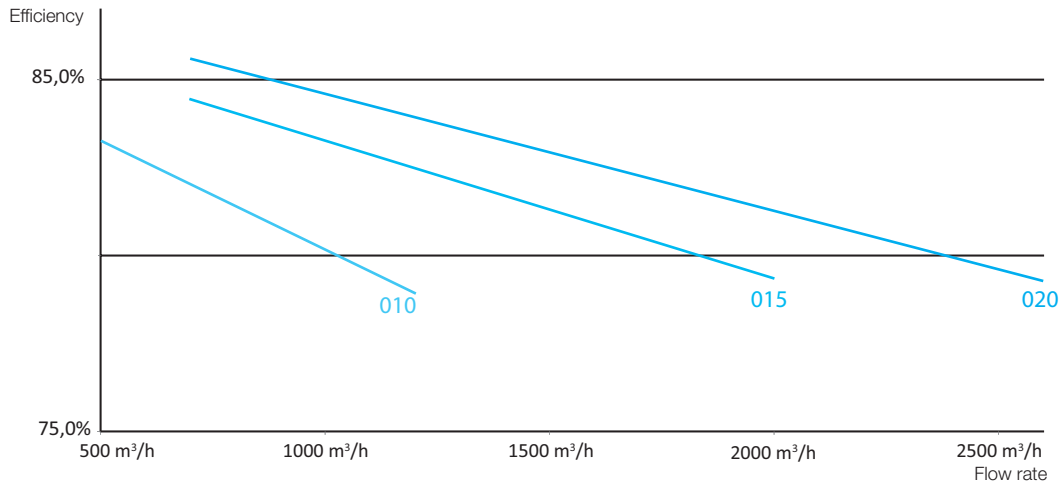

SFPv AHU = F (Flow)

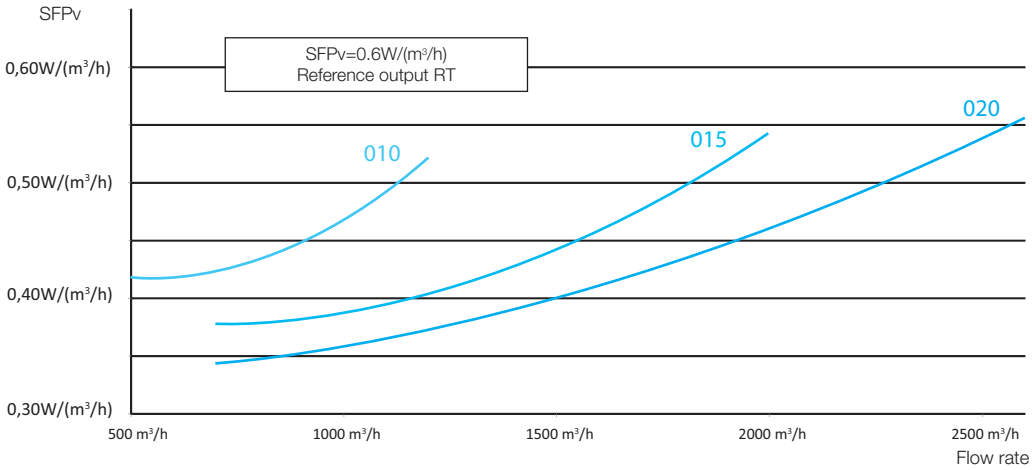

Ceiling-mounted 39HXH model performance

F5 exhaust filter, F7 intake filter, duct pressure: 200 Pa, heat recovery unit conditions: 0°C/90% & 20°C/50%

Operating pressure = F (Flow)

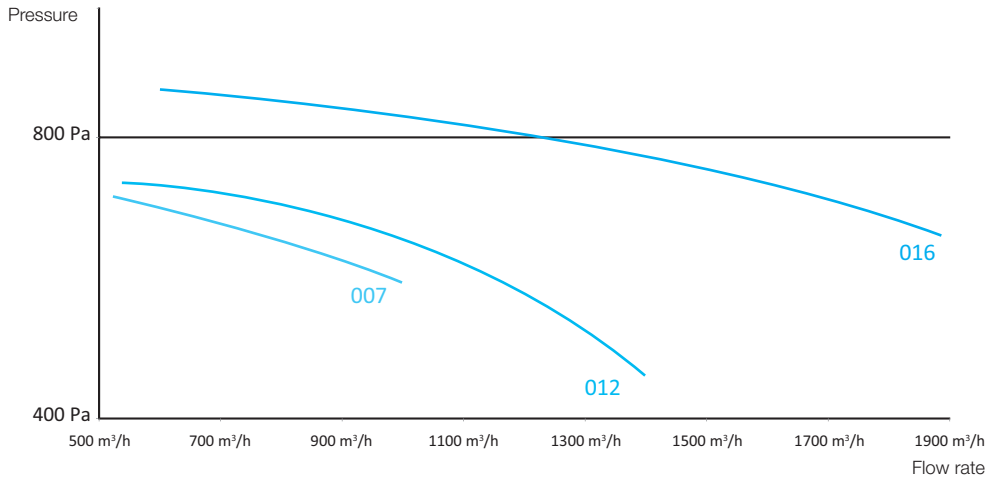

Performance recovery = F (Flow)

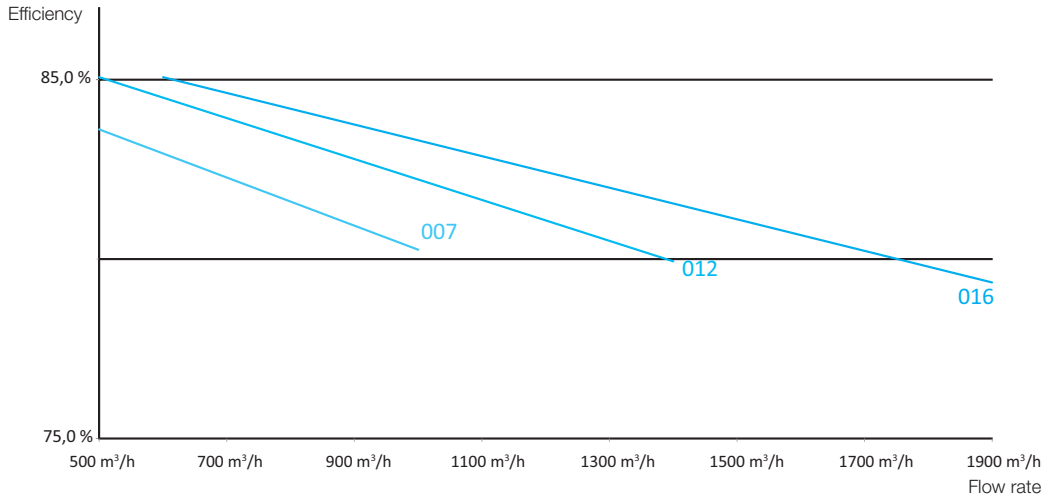

SFPv AHU = F (Flow)

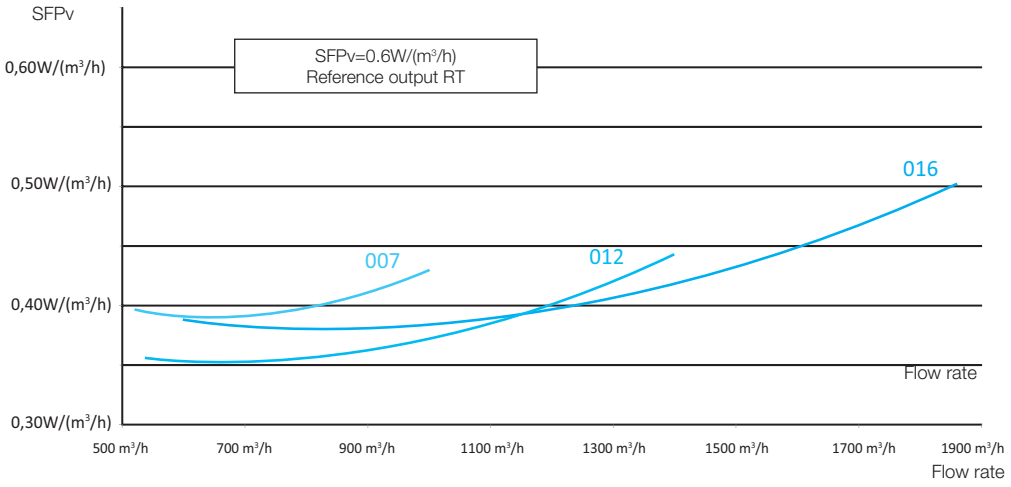

Dimensions and directions of air flows

Classic 39HXC & 39HXE

Models	39HXC & 39HXE					
	Height (C) (mm)	Width (B) (mm)	Length (A) (mm)		Weight (kg) *	
			C	E	C	E
010	958	810	1580**	1266**	200	201
020	1158	1010	1150 + 800**	510 + 800**	350	309
030	1359	1210	1264 + 800	800 + 800	465	432
040	1659	1510	1264 + 800	800 + 800	580	558
050	1659	1510	-	800 + 800	-	604
060	1959	1810	1407 + 800	800 + 800	765	702
075	1959	1810	-	800 + 800	-	751
100	2090	1920	-	1100 + 1100	-	955
150	2340	2192	-	1100 + 1200	-	1250

* Without internal option
** Round connection; beyond 47 mm on each side.

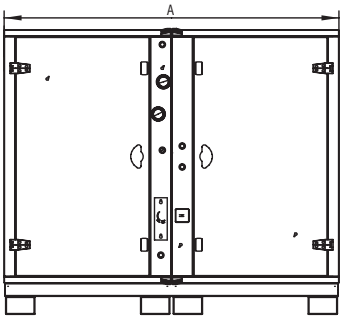

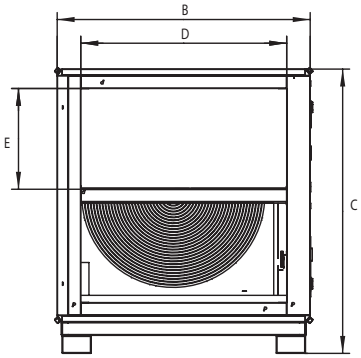

Direction of air flow

E models

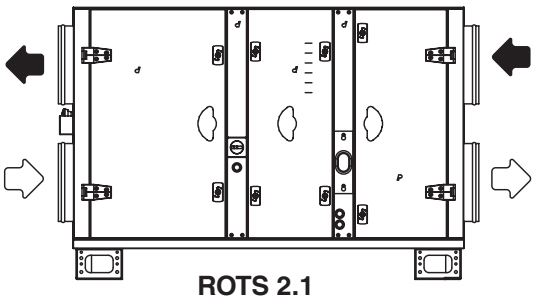

ROTS 2.1

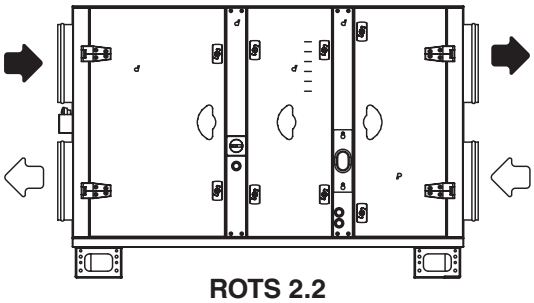

ROTS 2.2

WHITE ARROW = FRESH AIR
BLACK ARROW = EXTRACTED AIR

C models

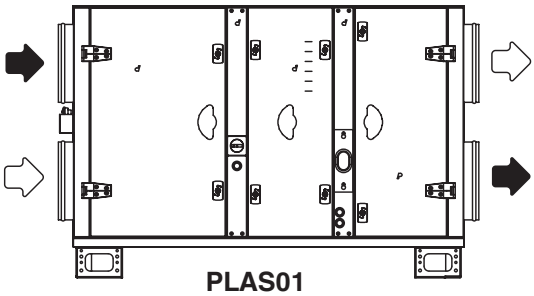

PLAS01

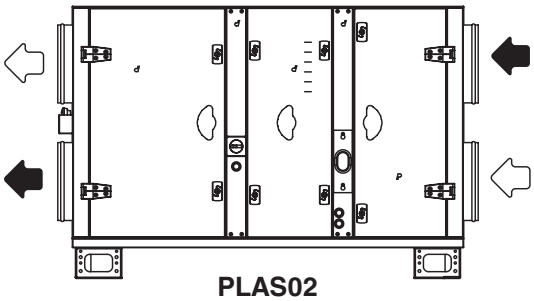

PLAS02

Vertical 39HXV

Models	Dimensions			Weight (kg) *
	Height (mm)	Length (mm)	Width (mm)	
010	1385	1313	730	202
015	1758	1593	832	330
020	1901	1735	832	389

Ø 16 mm condensate drain pipe
* Without internal option

Size 010

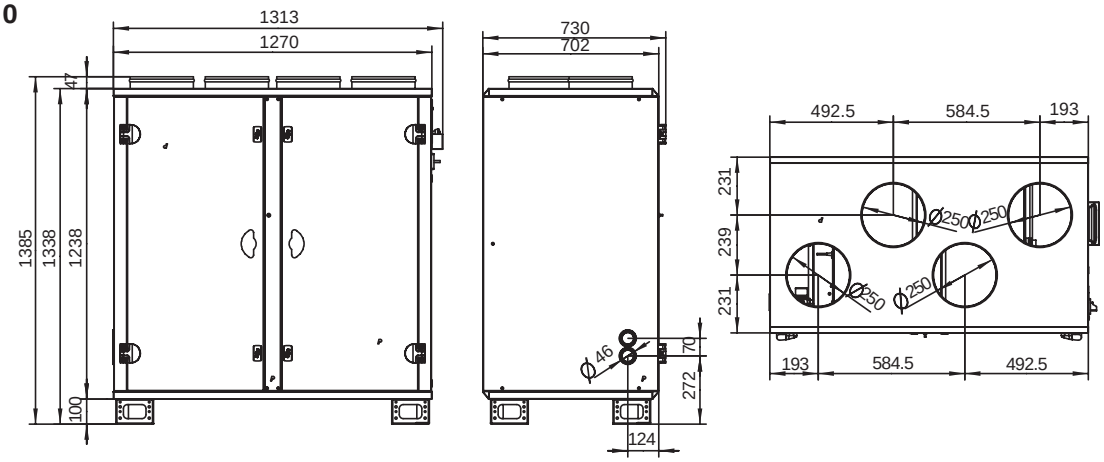

Size 015

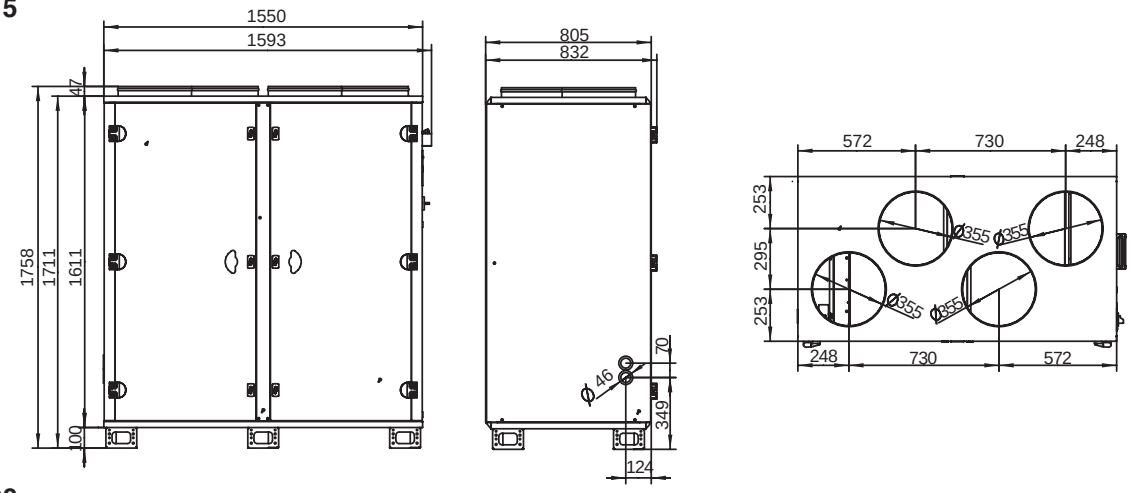

Size 020

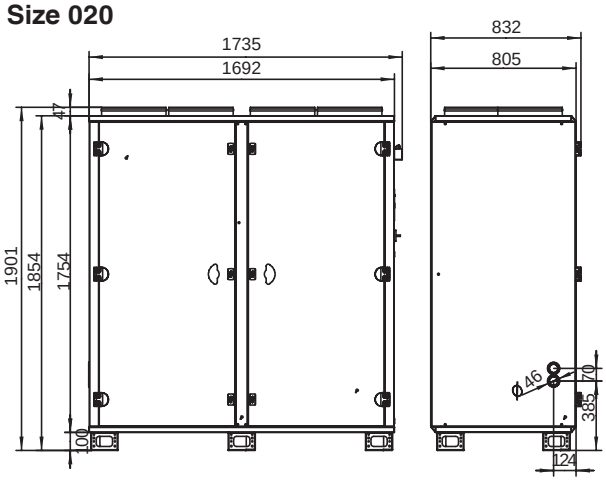

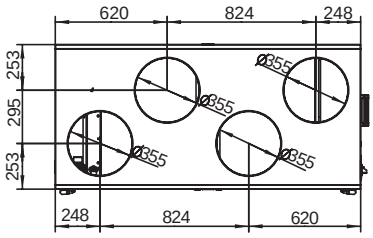

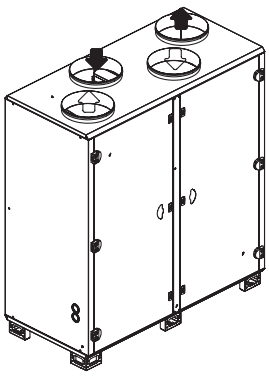

WHITE ARROW = FRESH AIR

BLACK ARROW = EXTRACTED AIR

Ceiling-mounted 39HXH

Models	Dimensions			Weight (kg) *
	Height (mm)	Length (mm)	Width (mm)	
007	585	1453	896	161
012	585	1592	1174	206
016	585	1850	1456	276

Ø 16 mm condensate drain pipe

Size 007

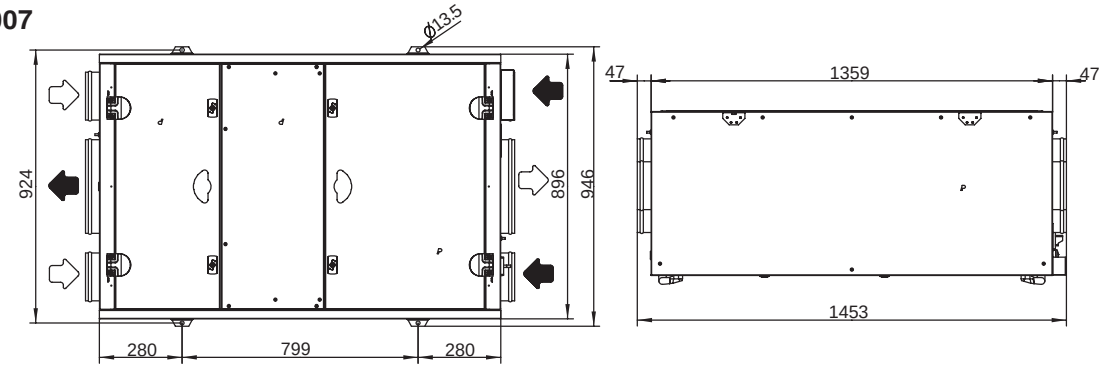

WHITE ARROW = FRESH AIR

BLACK ARROW = EXTRACTED AIR

Size 012

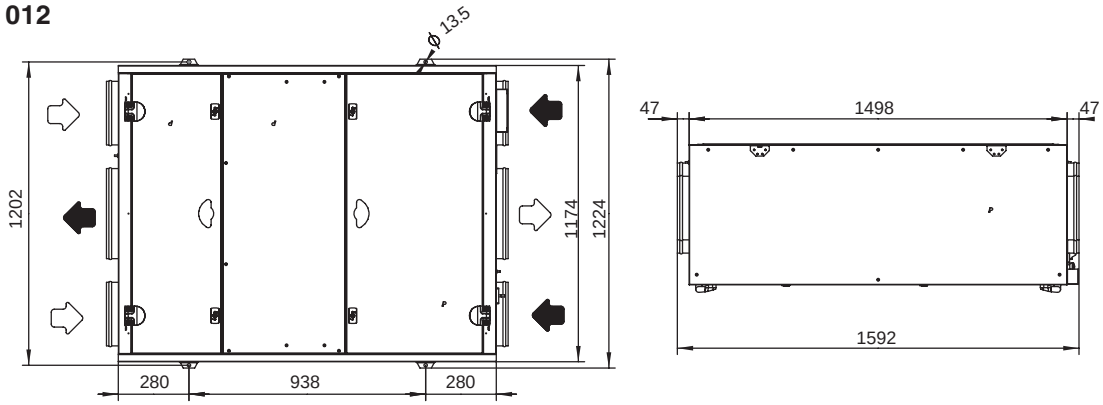

Size 016

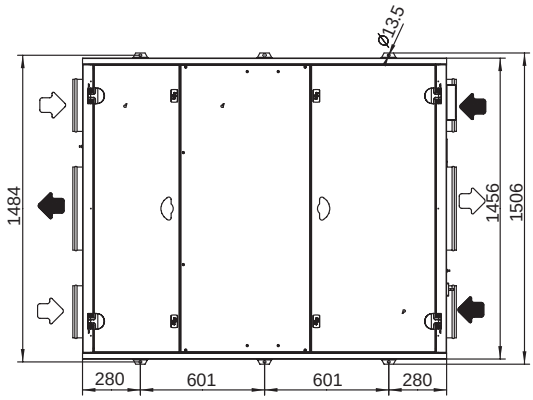

WHITE ARROW = FRESH AIR

BLACK ARROW = EXTRACTED AIR

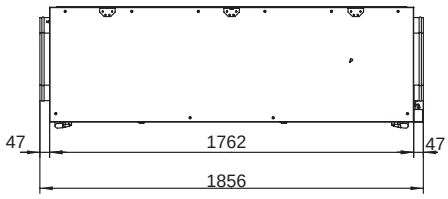

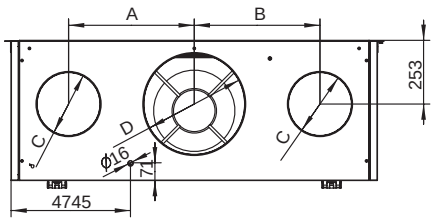

MODELS	AIR CIRCULATION DIMENSIONS (mm)			
	A	B	C	D
007	306	306	Ø160	Ø315
012	398	398	Ø250	Ø355
016	499.5	499.5	Ø250	Ø400

ADDITIONAL CASING (MUST ONLY BE POSITIONED IN A HORIZONTAL AIR FLOW)

39HX Models	Additional casing sizes (mm)	Weight (kg)
E 010 & C 010 **V 010** **H 007**	Size 1 542 x 496 x 810	49
E 020 & C 020 **V 015 & V 020** **P 012 & P 016**	Size 2 642 x 496 x 1010	62
E 030 & C 030	Size 3 759 x 400 x 1210	68
E 040 & E 050 **C 040 & C 050**	Size 4 909 x 400 x 1510	88
E 060 & E 075 **C 060 & C 075**	Size 5 1059 x 400 x 1810	112

Size 1

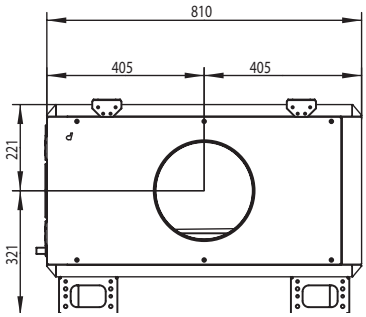

Size 2

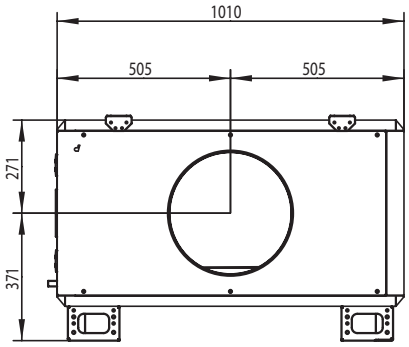

Size 3

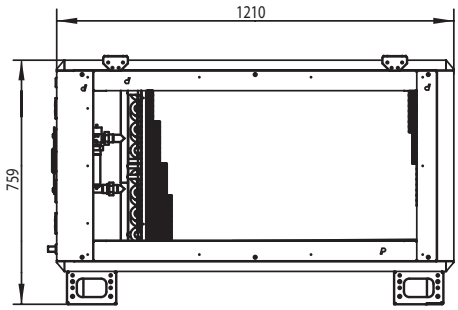

Size 4

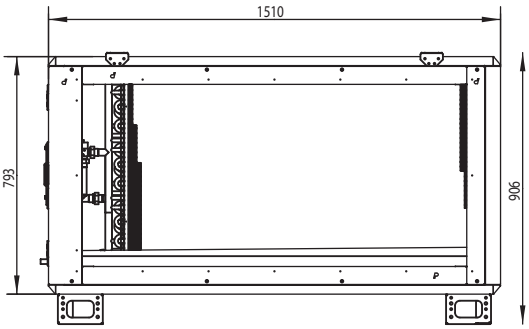

Size 5

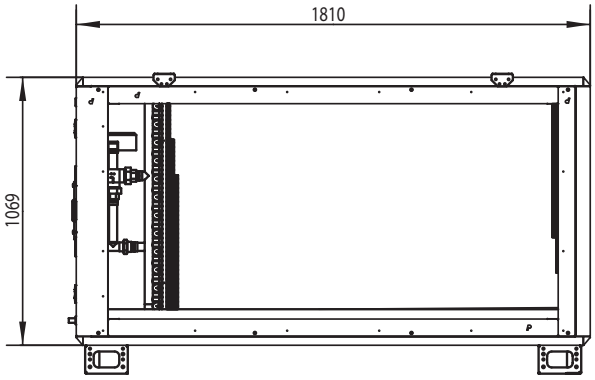

39CP

1000 to 30000 m^3/h

NEW

Available in june 2016

AIROVISION®

Plug and play with control included

High performance heat recovery system

High performance fan solution

Ready for ERP 1253-2014 2018

EN 1886 classification

Carrier's experts are developing a new generation of air handling unit to perfectly meet all your needs.

The 39CP range covers, in 9 sizes, airflow ranging from 1,000 to 30,000 m^3/h, and will be available in two levels of casing:

- L : for tertiary market
- H: for high tier application with low thermal bridge

Physical data

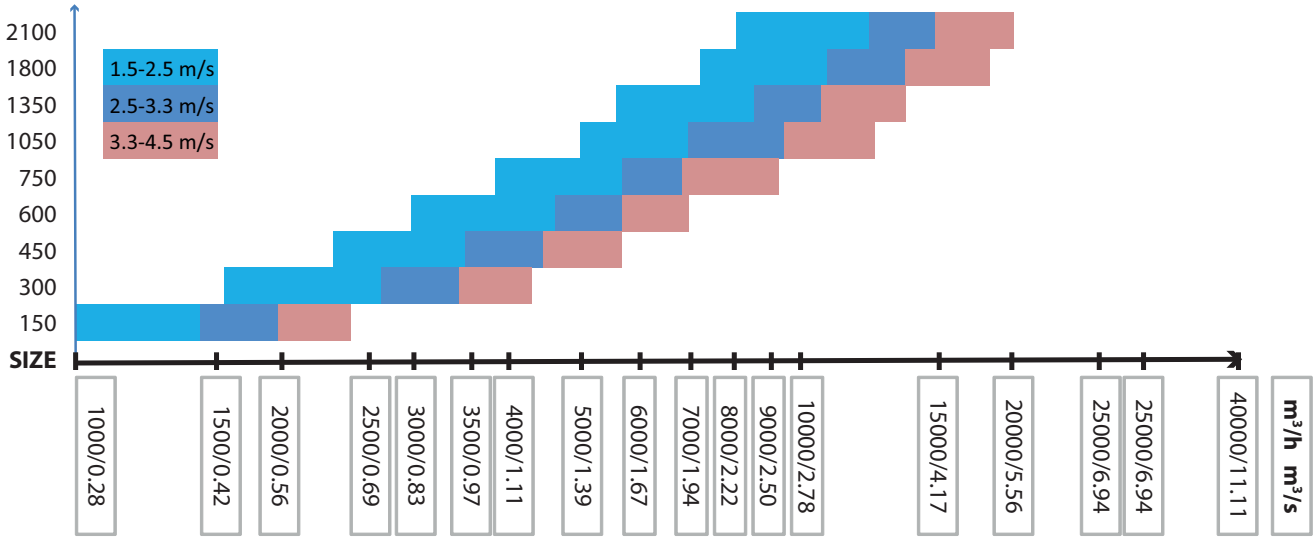

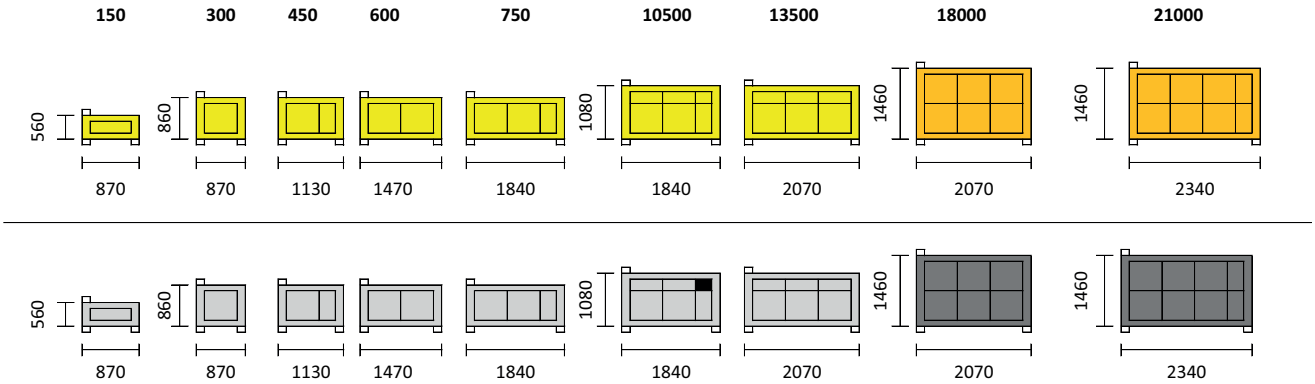

OPTIONS

Segment	39CP L for tertiary	39CP H for low thermal bridge
0-30000 m³/h	Std	Std
Casing thickness 50 mm	Std	Std
Casing low thermal bridge	-	Std
External coating casing	Opt	Std
Internal coating casing	-	Opt
Stainless steel casing	-	Opt
Plate heat exchanger efficiency up to 85%	Std	Std
Recovery Wheel efficiency up to 85%	Std	Std
Run arround coils efficiency up to 70 %	Std	Std
Heating and cooling coils	Std	Std
Super heating and steam coils	-	Std
Dx coils	Std	Std
Electrical heater	Std	Std
Steam humidifier	Std	Std
Double inlet fans	Std	Std
Plug fan with AC motors	Std	Std
Plug fan with EC motors	Std	Std
Filter for G4 to H14	Std	Std
Sound attenuator	Std	Std
Control	Std	Std

39SQ

AIROSTAR

New generation standardised air handling units for tertiary and commercial applications.

Eurovent-certified performances.

“Clean concept” design with smooth internal surfaces for easy cleaning and better air quality.

60 mm double-skin construction for good thermal insulation and low-noise operation.

Three basic configurations:

- Exhaust unit
- Supply unit with a single fan
- Combined return and supply unit with two fans

Physical data

39SQ		0402	0404	0604	0606	0806	0808	1008	1010	1210
Height (including base frame)	mm	560	800	800	1120	1120	1440	1440	1760	1760
Width	mm	738	738	1058	1058	1378	1378	1698	1698	2018
1 - Exhaust unit										
Air flow	m^3/s	0.58	1.17	1.75	2.63	3.5	4.67	5.83	7.29	10.2
Length	mm	660	820	900	1060	1140	1220	1300	1540	1620
2 - Supply unit heating										
Air flow	m^3/s	0.58	1.17	1.75	2.63	3.5	4.67	5.83	7.29	8.9
Heating capacity	kW	24.5	48.5	74.5	112.3	140.1	188.5	243.7	304.4	394.2
Length	mm	1380	1540	1620	1780	1860	1940	2180	2340	2340
3 - Supply unit heating and cooling										
Air flow	m^3/s	0.54	1.00	1.72	2.58	3.2	4.36	5.73	7.1	8.9
Heating capacity	kW	22.5	42.6	73.3	110	132.7	181.1	241	300.2	394.2
Cooling capacity	kW	10	19.2	33.1	49.9	63	86.2	112.3	139.7	237.4
Length	mm	1860	2020	2100	2260	2340	2420	2660	2820	2980
4 - Supply unit: mixing/heating/cooling										
Air flow	m^3/s	0.54	1.00	1.72	2.58	3.2	4.36	5.73	7.1	8.9
Heating capacity	kW	22.5	42.6	73.3	110	132.7	181.1	241	300.2	394.2
Cooling capacity	kW	10	19.2	33.1	49.9	63	86.2	112.3	139.7	237.4
Length	mm	2180	2340	2420	2660	2740	3060	3220	3460	3620
5 - Combined exhaust and supply unit										
Air flow	m^3/s	0.54	1.00	1.72	2.58	3.2	4.36	5.73	7.1	8.9
Heating capacity	kW	22.5	42.6	73.3	110	132.7	181.1	241	300.2	394.2
Cooling capacity	kW	10	19.2	33.1	49.9	63	86.2	112.3	139.7	252.2
Length total	mm	3460	3520	3620	4100	4260	4740	5220	5620	5940
Length section 1	mm					2530	2930	3170	3410	3490
Length section 2	mm					1730	1810	2050	2210	2450
Electric heater option										
Heating capacity 1	kW	7.5	7.5	18	27	36	36	45	60	126
Heating capacity 2	kW	11.3	15	27	36	48	60	75	90	180
Heating capacity 3	kW	15	22.5	36	54	72	96	120	150	234
Heating capacity 4	kW	18.8	30	45	63	84	120	150	180	288
Heating capacity 5	kW	30	37.5	54	81	108	144	180	225	396
Pre-heating coil option										
Heating capacity	kW	6.4	12.2	20.9	31.4	38.8	53	69.6	86.5	108.5

Standard conditions:
Heating: air -10°C/90% rh, +25°C, water 80/60°C
Cooling: air 28°C/50% rh, +16°C, water 7/12°C
Pre-heating: air -5°C, +5°C, water 80/70°C
External static pressure 300 Pa

Options

- Outdoor installation
- Inspection section in between heating and cooling coils
- Reversed hot/chilled water coils
- Differential pressure gauges
- Differential pressure taps
- Direct-expansion R-410A refrigerant coil
- Lighting with switch
- Door safety screen
- Variable-speed drive with integrated disconnect switch
- Run-around coils for energy recovery
- Hygienic options for hospital/laboratory applications: class 3 dampers, F9 fanal filter, inspection sections
- Empty section
- Plug fan EC motors
- Plug fan AC motors
- Outdoor installation
- Prodialog Controller with human interface (local or remote installation)
- Jbus, Bacnet communications gateway

Features and advantages

- New generation standardised air handling units for tertiary and commercial applications.
- Eurovent-certified performances.
- Standardised components for short delivery time (target 4 weeks) and competitive price positioning.
- “Clean concept” design with smooth internal surfaces for easy cleaning and better air quality.
- 60 mm double-skin construction for good thermal insulation and low-noise operation.
- Three basic configurations:
  - Exhaust unit
  - Supply unit with a single fan
  - Combined return and supply unit with two fans
- Eight sizes with air flows from 0.4 to 7.3 m^3/s (1400 to 26300 m^3/h).
- Galvanised steel frame and casing with large hinged access doors.
- Casing performance (EN1886): air leakage L1, thermal transmittance T3, thermal bridging TB3.
- Double or single mixing section.
- Pre-heating hot water coil.
- G4 pleated or/and F7 bag filters.
- Hot water coil or electric heaters.
- Chilled water coil.
- Belt-driven forward/backward curved fans or direct-drive plug-in fans.

Controls

NEW

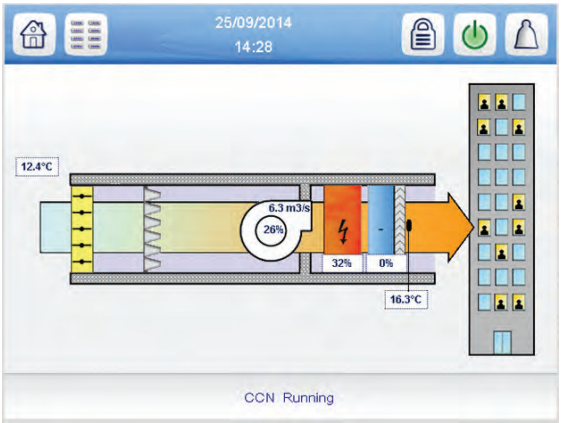

Dimensions/clearances

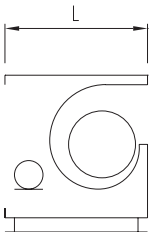

1 – Exhaust unit
Exhaust fan

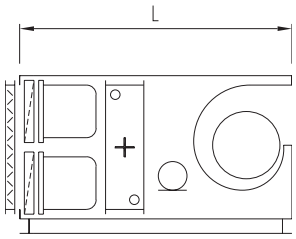

2 – Supply unit heating
Return air damper
G4+F7 filter
Heating coil 2 rows
Supply fan

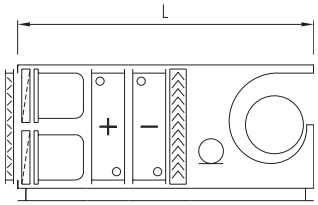

3 – Supply unit heating and cooling
Return air damper
G4 + F7 filters
Heating coil 2 rows
Cooling coil 6 rows
Supply fan

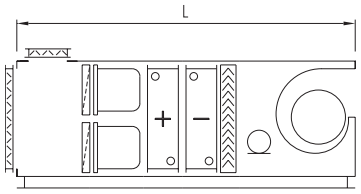

4 – Supply unit: mixing/heating/cooling
Return air damper
Fresh air damper
G4 + F7 filters
Heating coil 2 rows
Cooling coil 6 rows
Supply fan

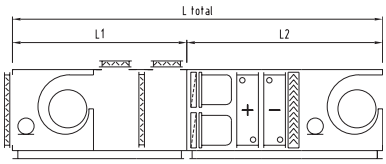

5 – Combined exhaust and supply unit
Return air damper
Return fan
Exhaust damper
Mixing damper
Fresh air damper
G4 + F7 filters
Heating coil 2 rows
Cooling coil 6 rows

Hospital exhaust and supply units with run-around coil for energy recovery

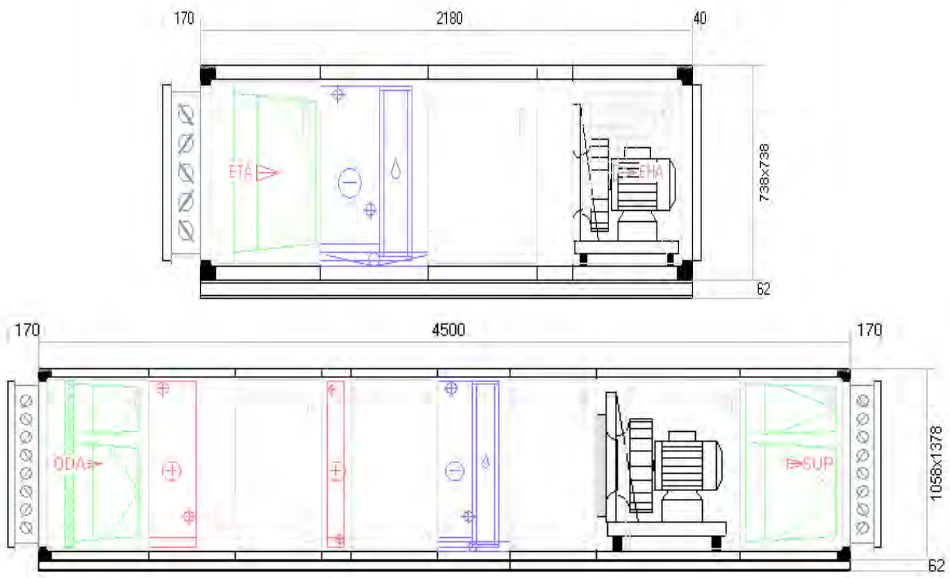

Notes on dimensions:

- All dimensions are for indoor units with backward-curved fans, except size 0402 that has dimensions with a forward-curved fan
- Casing length is exclusive of return air damper
- Electric heater option: length varies with heating capacity
- Pre-heating coil option: length + 160 mm
- Contact your Carrier representative for certified dimensional drawings

39SQC/R/P

AIROSTAR Heat Recovery

Three versions in nine sizes with air flows from 0.2 to 8.4 m^3/s (700 to 30000 m^3/h).

39SQ units are designed to supply fresh air to any type of building. The efficient air-to-air heat exchanger recycles the heat from the exhaust air, pre-heats cold outdoor air in winter and pre-cools hot outdoor air in summer, resulting in impressive energy savings.

High-efficiency units with counter-flow plate (C models) or rotary heat exchangers (R models) with a thermal efficiency up to 85%.

Casing performance (EN1886): air leakage L1, thermal transmittance T3, thermal bridging TB3.

Standard-efficiency units with cross-flow plate heat exchangers (P models) with a thermal efficiency up to 54%.

Physical data

EUROVENT CERTIFIED PERFORMANCE
AHU N° 11.09.003
Range 39SQ
www.eurovent-certification.com

Model		39SQC			39SQR								
Size		0405	0506	0606	0606	0707	0808	0909	1010	1111	1212	1412	1416
Weight													
Unit without coils	kg	218	294	345	328	385	516	586	717	852	1043	1623	2605
Unit with reheating and cooling coils	kg	301	399	469	428	509	660	757	952	1121	1346	2026	3049
Unit air flow													
Maximum	m^3/s	0.43	0.72	0.88	1.25	1.70	2.22	2.81	3.47	4.20	5.00	5.83	8.19
	m^3/h	1565	2580	3150	4500	6125	8000	10125	12500	15125	18000	21000	29500
Minimum	m^3/s	0.20	0.34	0.43	0.43	0.62	0.91	1.25	1.48	1.91	2.18	2.64	8.19
	m^3/h	737	1225	1549	1549	2247	3265	4501	5328	6882	7847	9500	13000
Unit thermal efficiency*	%	94	94	94	77.5	78	78	79	79	79	79	75	76
Unit external static pressure													
At max. air flow (low static fan)	Pa	500	700	700	150	-	-	-	120	-	150	610	480
At max. air flow (high static fan)	Pa	1550	2000	1700	600	400	1200	500	950	800	1050	960	940
Specific unit fan power**	$kW/m^3/s$	2.4	2.1	2.5	2.3	2.3	2.1	2.1	1.9	2	1.7	1.3	1.1
Unit sound data***													
Sound power level, casing radiated	dB(A)	68	68	71	70	73	68	73	69	73	69	68	70
Sound power level, extract duct	dB(A)	74	74	77	76	79	75	79	76	79	76	79	81
Sound power level, supply duct	dB(A)	84	84	88	87	89	85	89	86	89	86	89	90
Heat reclaim heat exchanger		Counter-flow plate			Rotary								
Material		Aluminium			Aluminium								
Capacity control		Bypass damper			Variable speed drive								
Exhaust and supply fans		Plug fan (backward curved)											
Fan diameter	mm	225	280	280	280	315	400	400	500	500	630	2X500	2X560
Drive		Frequency inverter											
Rated motor power (low static)	kW	0.55	1.1	1.5	1.5	2.2	2.2	2.2	4	5.5	5.5	2X4	2X5.5
Rated motor power (high static)	kW	1.5	2.2	3	3	4	5.5	5.5	7.5	11	11	2X5.5	2X7.5
Exhaust and supply air filters		Bag filter 500 mm, filter efficiency F7											
Outside air pre-heating coil		Hot-water coil or electric heater (option)											
Supply air reheating coil		Hot-water coil or electric heater (option)											
Supply air cooling coil		Chilled-water coil (option)											
Control system		Digital control with web server											
Chassis paint colour		Colour code: RAL 7035											

* Thermal efficiency of supply air at 2 m/s with the effect of supply air fan, outside air -10°C, extract air 22°C/50%.
** Specific fan power with clean filters at 2 m/s and 200 Pa.
*** Sound power at 2 m/s and 200 Pa.

Note: Data for standard unit without optional coils and dampers.

Model		39SQP						
Size		0405	0506	0606	0707	0808	0909	1010
Weight								
Unit without coils	kg	210	275	324	395	536	578	688
Unit with reheating and cooling coils	kg	277	360	423	518	712	783	923
Unit air flow								
Maximum	m^3/s	0.68	1.04	1.25	1.70	2.22	2.81	3.47
	m^3/h	2450	3750	4500	6125	8000	10125	12500
Minimum	m^3/s	0.20	0.34	0.43	0.62	0.91	1.25	1.48
	m^3/h	737	1225	1549	2247	3265	4501	5328
Unit thermal efficiency*	%	62	63	63	64	64	63	62
Unit external static pressure								
At max. air flow (low static fan)	Pa	400	-	0	-	50	-	150
At max. air flow (high static fan)	Pa	650	800	650	450	1300	550	1000
Specific unit fan power**	$kW/m^3/s$	2.2	1.9	2.1	2	1.8	1.9	1.7
Unit sound data***								
Sound power level, casing radiated	dB(A)	67	66	69	73	67	73	69
Sound power level, extract duct	dB(A)	77	75	79	82	77	79	78
Sound power level, supply duct	dB(A)	84	82	86	88	84	89	86
Heat reclaim heat exchanger		Cross-flow plate						
Material		Aluminium						
Capacity control		Bypass damper						
Exhaust and supply fans								
Fan diameter	mm	225	280	280	315	400	400	500
Drive								
Rated motor power (low static)	kW	1.1	1.1	1.5	2.2	2.2	2.2	4
Rated motor power (high static)	kW	1.5	2.2	3	4	5.5	5.5	7.5
Exhaust and supply air filters		Pleated filter 100 mm, filter efficiency F7						
Outside air pre-heating coil		Hot-water coil or electric heater (option)						
Supply air reheating coil		Hot-water coil or electric heater (option)						
Supply air cooling coil		Chilled-water coil (option)						
Control system		Digital control with web server						
Chassis paint colour		Colour code: RAL 7035						

* Thermal efficiency of supply air at 2 m/s with the effect of supply air fan, outside air -10°C, extract air 22°C/50%.
** Specific fan power with clean filters at 2 m/s and 200 Pa.
*** Sound power at 2 m/s and 200 Pa.

Note: Data for standard unit without optional coils and dampers.

Electrical data

Model 39		SQC 0405	SQC 0506	SQC 0606	SQR 0606	SQR 0707	SQR 0808
		SQP 0405	SQP 0506	SQP 0606		SQP 0707	SQP 0808
Power circuit		Built-in main disconnect switch					
Nominal power supply	V-ph-Hz	400-3-50 neutral					
Voltage range	V	360-440					
Maximum unit power	kW	3	4.77	6.37	6.37	8.75	11.75
Maximum supply cable size	mm^2	2.5	4	4	4	6	6
Main switch	A	25	25	25	25	40	40
Short circuit unit capacity	kA	15	15	15	15	15	15
Recommended power line fuse protection	A	20	25	25	25	35	35
Control circuit power		Built-in 24 V control transformer					

Note: Electric pre-heater and reheater have separate power supply.

Model 39		SQR 0909	SQR 1010	SQR 1111	SQR 1212	SQR 1412	SQR 1416
		SQP 0909	SQP 1010				
Power circuit		Built-in main disconnect switch					
Nominal power supply	V-ph-Hz	400-3-50 neutral					
Voltage range	V	360-440					
Maximum unit power	kW	11.75	15.75	22.75	22.75	22.75	30.75
Maximum supply cable size	mm^2	6	10	16	16	16	25
Main switch	A	40	63	63	63	63	80
Short circuit unit capacity	kA	15	15	15	15	15	15
Recommended power line fuse protection	A	35	50	63	63	63	80
Control circuit power		Built-in 24 V control transformer					

Note: Electric pre-heater and reheater have separate power supply.

Hospital exhaust and supply units with run-around coil for energy recovery

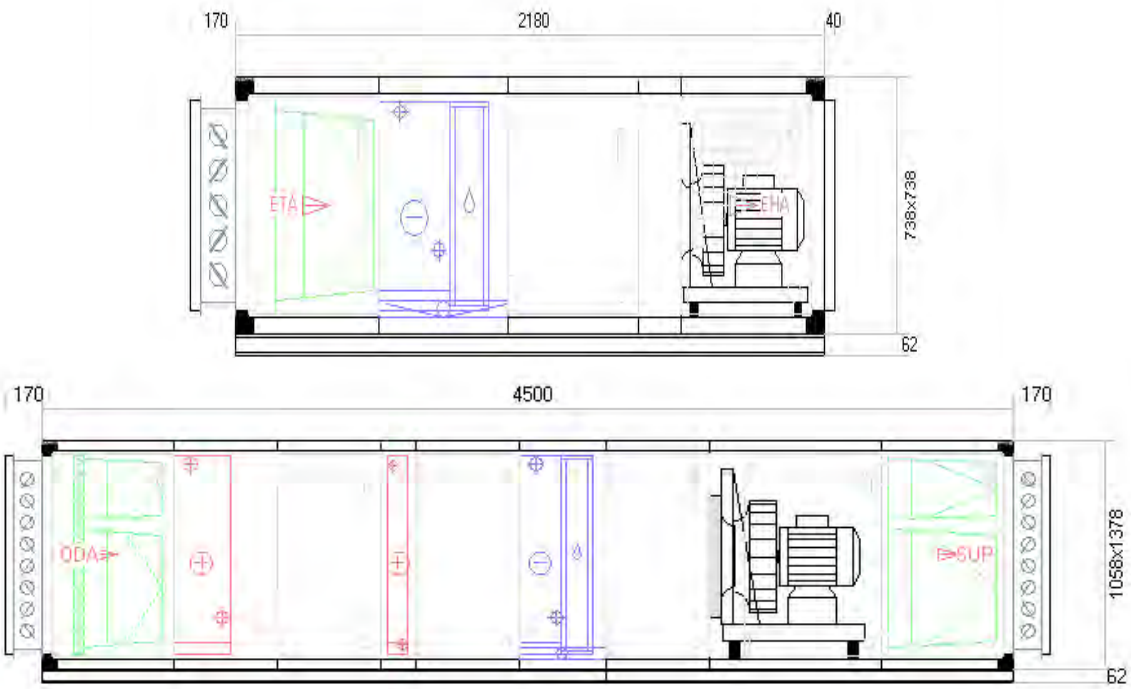

Options/accessories

- Plug fan EC motors
- Plug fan AC motors
- Outdoor installation
- Reversed extract/supply air duct connections
- Left-hand water connections & service side
- Outdoor air pre-heater to prevent air-to-air heat exchanger freezing at very low outside air temperatures
- Air heater (hot-water or electrical heater)
- Air cooler (chilled-water coil)
- Inspection chamber between heating and cooling coils
- Pro-Dialog controller with human interface (local or remote installation)
- Inspection windows
- Extract, exhaust, outside, supply air isolating dampers
- G4 fresh-air pre-filter
- Sound attenuators (accessory)
- Direct-expansion R-410A refrigerant coil
- JBus, BACnet communications gateways
- Cool/heat change-over coil for heat pump applications
- Coated coils
- Recirculation damper (39SQP/R)

Features and advantages

- Three versions in nine sizes with air flows from 0.2 to 8.4 m^3/s (700 to 30000 m^3/h).
- 39SQ units are designed to supply fresh air to any type of building. The efficient air-to-air heat exchanger recycles the heat from the exhaust air, pre-heats cold outdoor air in winter and pre-cools hot outdoor air in summer, resulting in impressive energy savings.
- Eurovent-certified performances.
- High-efficiency units with counter-flow plate (C models) or rotary heat exchangers (R models) with a thermal efficiency up to 85%.
- Casing performance (EN1886): air leakage L1, thermal transmittance T3, thermal bridging TB3.
- Standard-efficiency units with cross-flow plate heat exchangers (P models) with a thermal efficiency up to 54%.
- Plug & play installation thanks to factory-mounted control system.
- Delivered in one piece with integrated heating and cooling coils (only the 39SQR 1212 is delivered in two pieces).
- Field-separable casing in two pieces to facilitate installation in existing buildings.
- Plug fans with variable frequency drive.
- F7 efficiency filters.
- Main control system functions:
  - Air flow control: constant volume, constant pressure, variable volume (demand ventilation with CO_2 sensor)
  - Temperature control: extract or supply air temperature, room temperature sensor
  - Summer night free-cooling control
  - Alarm indication: temperature too low, coil frosting, clogged filters, etc.
  - Easy local or remote access by integrated web server (no specific software required)
  - RS485 communication port

Controls

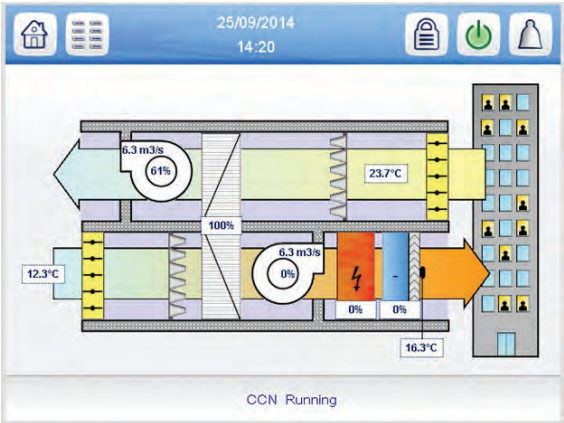

39HQ

AIROVISION®

Airovision is a modular construction that can be fully customised to provide the required performance for any application.

Special new casings encompass only high-quality components, including filters, heat recovery systems, fan assemblies, cooling and heating coils, humidifiers and attenuators.

The Airovision range also pays special attention to air quality and reduction of the energy required to cool, heat, humidify and supply the conditioned air.

Airovision is available in a large selection of sizes and arrangements, suitable for many different applications.

Controls (Option)

EUROVENT CERTIFIED PERFORMANCE
AHU N° 08.02.365
Range 39HQ
www.eurovent-certification.com

Options

- 100% stainless steel
- Direct-drive fans
- All types of humidification systems, including infrasonic
- Flat pack option for site assembly
- Heat recovery systems (run-around coil, plate heat exchanger and thermal wheels)
- Wide selection of standard accessories
- 316L stainless steel drain pan with PVC wall lining in the outside air inlet section and filter section
- Plug fan EC motors
- Pro-Dialog controller with human interface (local or remote installation)

Features and advantages

- Airovision is a modular construction that can be fully customised to provide the required performance for any application.
- Special new casings encompass only high-quality components, including filters, heat recovery systems, fan assemblies, cooling and heating coils, humidifiers and attenuators.
- The Airovision range also pays special attention to air quality and reduction of the energy required to cool, heat, humidify and supply the conditioned air.
- Airovision is available in a large selection of sizes and arrangements, suitable for many different applications.
- Applications include leisure and event complexes, theatres, museums, libraries, offices in companies and government institutions, shopping centres, super-markets, department stores and educational establishments, as well as oil drilling rigs, airports and cruise ships.
- In addition Airovision is also ideal in health care and in industries with stringent hygiene requirements.

Environmentally sound

- No paint treatment required after the production process
- 100% recyclable components
- Low energy usage due to optimised component selection
- High-efficiency heat recovery systems available

Technical specification (in accordance with EN1886)

- Heat transfer factor class T2
- Thermal bridging factor TB 2
- Air tightness class B (L2)
- Mechanical strength class 1A (DI)
- Filter bypass leakage
  - class F7 for standard slide-in construction
  - class F9 for special slide-in construction
  - class F9 for built-in construction

High-efficiency centrifugal fan

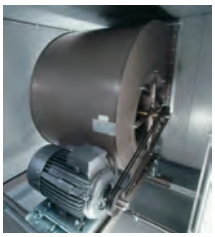

Special sorption heat recovery wheels

Filters are easily removable

Generously sized access doors

Rigid construction

1 Carrier profiled steel frame construction with purpose-built corner and centre posts
2 Panels with 60 mm thick thermal insulation
3 Robust base frame made of galvanised steel box profile

High corrosion resistance

4 316L stainless steel drain pan with PVC wall lining in the outside air inlet section and filter section (option)
5 Filters held in 316L stainless steel frames
6 Anti-corrosion protection available
7 Internal and external panels made of high-quality prepainted galvanised sheet steel
8 Cooling coils with integrated stainless steel drain pan and plastic droplet eliminator housed in an aluminium frame
9 Special panel design and frame detail eliminate the risk of condensation forming in the panels

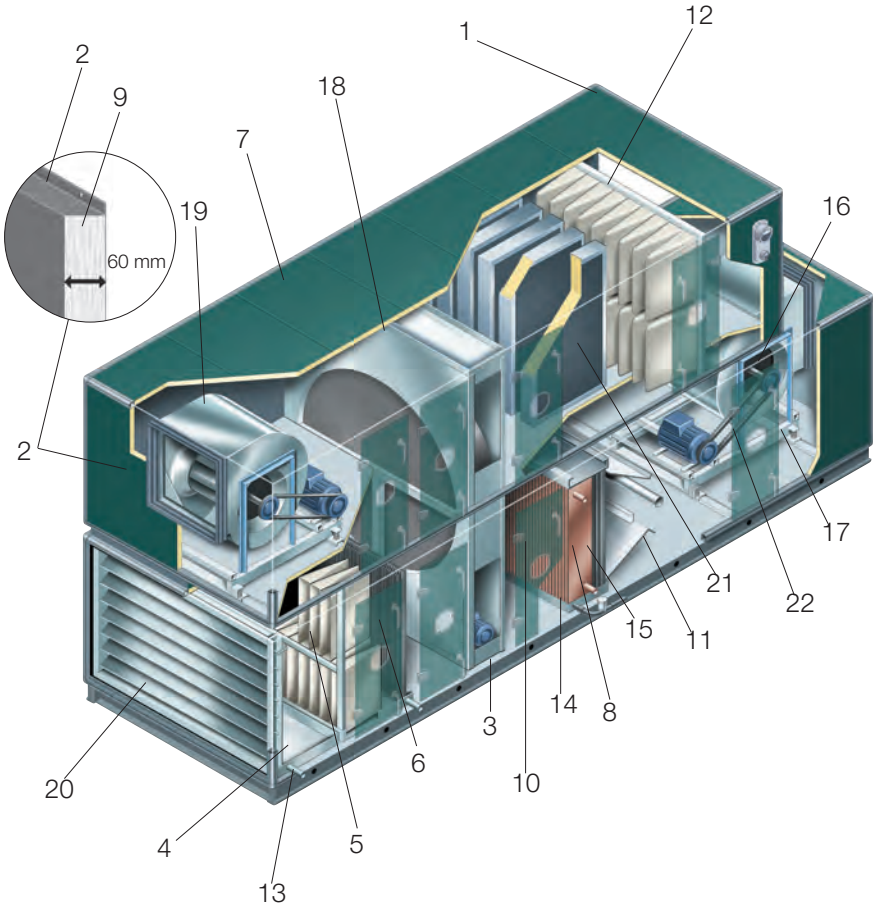

Easy maintenance

10 Various inspection options with generously sized clear opening access doors
11 Completely smooth internal surfaces
12 Filters easily removable
13 Drain pan in the outside air inlet section and filter section equipped with drain (option)
14 Cooling coil drain pan fully accessible for cleaning/disinfection
15 Moisture eliminator after the cooling coil easily removable
16 Long-life fan and motor bearings
17 Fans removable from the side

High-quality built-in components

18 Special sorption heat recovery wheels for optimised recovery of heat, cold and humidity
19 High-efficiency centrifugal low-noise fans, mounted on vibration isolators with low transmission factor
20 Aluminium dampers with UV-resistant double nylon bearings
21 Skrim faced sound absorption splitters
22 Matched high-efficiency belt drives

Central station air handling unit range (based on a nominal filter loading of 1.11 m³/s)

Height \ Width	4	5	6	7	8	9	10	11	12	13	14
2.5	0.56	0.69	0.83								
4	1.11	1.39	1.67	1.81	2.22	2.50	2.78	3.06	3.33		
6	1.67	2.22	2.50	2.92	3.33	3.75	4.17	4.72	5.00	5.56	5.83
8			3.33	3.89	4.44	5.00	5.56	6.11	6.67	7.22	7.78
10					5.56	6.39	6.94	7.64	8.33	9.03	9.72
12						7.50	8.33	9.17	10.00	10.83	11.67
14									11.67	12.78	13.61
16										14.44	15.56
18											
20											

Height \ Width	15	16	17	18	19	20	21	22	23	24	25
2.5											
4											
6	6.39	6.67	7.22	7.50							
8	8.33	8.89	9.44	10.00	10.56	11.11	11.67	12.22	12.78	13.33	
10	10.56	11.11	11.94	12.50	13.33	13.89	14.72	15.28	16.11	16.67	17.50
12	12.50	13.33	14.44	15.00	15.83	16.67	17.50	18.33	19.17	20.00	20.83
14	14.72	15.56	16.67	17.50	18.61	19.44	20.56	21.39	22.50	23.33	24.44
16	16.67	17.78	18.89	20.00	21.11	22.22	23.33	24.44	25.56	26.67	27.78
18				22.50	23.89	25.00	26.39	27.50	28.89	30.00	31.39
20						27.78	29.17	30.56	31.94	33.33	34.72

Preferred range — Combination with heat recovery — Other sizes

Note: All air flow values are in m³/s. Larger unit sizes are possible.

Module dimension:	160 mm
External width:	n x module plus 98 mm
External height:	n x module plus 98 mm
Base frame height:	60 mm or 62 mm

Example:	type 39HQ12.10
Width:	12 x 160 plus 98 = 2.018 mm
Height:	10 x 160 plus 98 = 1.698 mm
Nominal air flow:	8.33 m³/s

39CZ

NEW

1000 to 66000 m³/h
39CZ - CL/HE (Ultra clean applications)

AIROVISION®

The air treatment reference for all applications in the tertiary sector and industry

Complete range, large number of options

Wide air flow rate range

High EN 1886 classification

All air treatment function combinations

Air handling for all applications

An extended range of air flow equipment and an exhaustive selection of air-processing options make 39CZ an efficient solution for applications in both the office and industrial sectors.

The wide range of solutions available and the product's extensive modular design, as well as the various horizontal, vertical, stacked and side-by-side assembly formats for both indoor and outdoor use, provide solutions to meet every requirement.

Performing to new standards

39CZ air handling units have been designed in line with the EN 13053 manufacturing standard and with the aim of fulfilling the strictest EN 1886 standard grades: transmittance and thermal bridge, mechanical endurance and airtight jacket, filter by-pass leakage, compliance with mechanical safety requirements for fans.

Carrier has developed all the components and accessories (handles, safety latches, through-wall unions, inspection windows, seals) that give high performance, thanks to a special design that has become a reference in its field.

Range

The 39CZ range covers, in 11 sizes, airflows ranging from 1,000 to 66,000 m³/h.

The following chart shows the required size based on:

- The air flow rate through the front area exchanger coil assembly
- The rate of air flow to be treated

The diagrams show the types of layout with the operating limits of the components.

Air heater (A), air conditioner without droplet separator (B), with standard droplet eliminator (C), with high speed droplet separator (D).

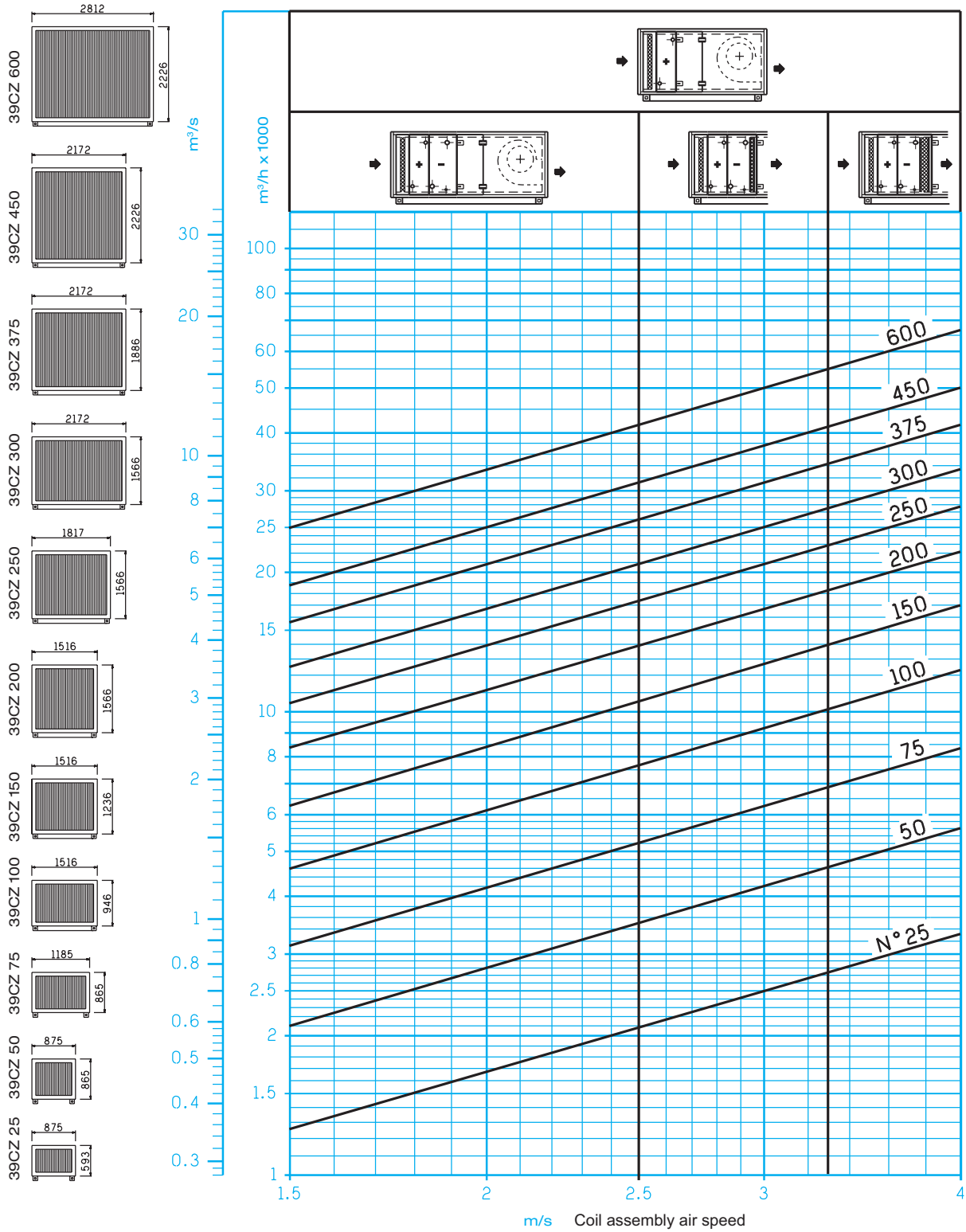

Features

- Simplified installation and maintenance operations:
  - Threaded hydraulic connections
  - Coils and eliminators on slides
  - Multifunction support
  - Standard access doors
  - Operating and monitoring accessories: frequency inverter, antifreeze thermostat, pressostat, sensors, etc.

Our systems can be delivered flat-packed or can be disassembled on-site for the renovation market and difficult access sites.

39CZ – CL/HE

Ultra clean reference

- Design, adaptation and options in full compliance with EN 13053 standard hygiene recommendations related to controlled atmosphere room air treatment
- High quality solutions and materials
- Entirely smooth inner design, all elements can be cleaned and effectively decontaminated.
- Clean rooms, laboratories, pharmaceutical industry, microelectronics, car industry, plastics, hospital sector

Ultra-cleanliness

- An AHU that meets high demands
  - Plug fan with profiled, high efficiency blades.
  - Air flow control by an integrated frequency inverter with display (option).
  - Filter assemblies adapted to the necessary level of filtration to ensure the highest filtration performances.
  - Materials and coatings ensure the levels of chemical resistance, bacteriological cleanliness, and cleanability required to control contamination.
  - Panels and accessories designed to meet the highest performance level requirements (airtightness, acoustics, thermal, etc.).
- Meets new standards in performance
  - Design tailored to the most stringent requirements of new-generation ultra-clean processes.
  - Maximum efficiency particulate filtration.
  - Reinforced seals withstand required pressure levels.
  - Easy decontamination.
  - Total control over quality, from design to manufacturing.
- 39CZ - CL concept
  - Completely smooth inside and outside.
  - White RAL 9010 coated casing inside and outside.
  - Mineral wool insulation (long fibres, thickness 50 mm).
  - Panels, inside components and accessories made of 304L or 316L stainless steel (option).
  - Specific coatings and steels available for each function.
  - Flat or sloped stainless steel bottom (option).
- 39CZ - HE concept
  - Completely smooth inside.
  - White RAL 7035 coated casing inside and outside.
  - Mineral insulation (long fibres, thickness 50 mm).
  - 4-slope hygienic condensates drain pan.
  - Flat or sloped stainless steel bottom (option).
- High standards right down to the smallest details
  - Offset hinges and lockable handles made of composite materials: excellent corrosion resistance, proven strength, easy to open and close, good temperature resistance (-40 to +80°C).
  - The hinge pins are designed to avoid any leakage and ensure the casing's thermal performances.
  - Base frame raised above water.
  - Double-shouldered door profile with specially shaped EPDM seal for optimum leakage performance.
  - Large double-wall, square inspection window with central seals on the inside and outside and inside the panel provided by a one-piece bellow.

38RBS

Nominal cooling capacity 40-160 kW

AQUASNAP®

Commercial and industrial applications

Compact design

Quiet operation

The 38RBS condensing unit range was designed for commercial (air conditioning of offices, hotels etc.).

The units integrate the latest technological innovations:

- Non-ozone depleting refrigerant R410A
- Scroll compressors
- Low-noise fans made of a composite material
- Auto-adaptive microprocessor control

Physical data

38RBS		039	045	050	060	070	080	090	100	120	140	160
Nominal cooling capacity, standard unit*	kW	40.4	45.9	52.4	58.5	66.7	77.9	90.4	100.9	119.4	139.6	161.7
Power input	kW	13.8	16.3	19.0	21.2	24.4	28.8	31.8	36.0	43.6	50.2	58.7
EER	kW/kW	2.92	2.81	2.75	2.76	2.74	2.7	2.84	2.81	2.74	2.78	2.75
Weight ex-factory, standard unit**	kg	390	399	416	439	426	450	689	692	710	796	836
Sound levels												
Standard unit												
Sound power level 10-12 W***	dB(A)	80	81	81	81	87	87	84	84	84	90	90
Sound pressure level at 10 m****	dB(A)	49	49	49	49	55	55	52	52	52	58	58
Unit with option 15LS (very low sound level)												
Sound power level 10-12 W***	dB(A)	79	80	80	80	80	80	83	83	83	83	83
Sound pressure level at 10 m****	dB(A)	48	48	48	48	48	48	51	51	51	51	51
Compressors		Hermetic scroll compressor, 48.3 r/s										
Circuit A		2	2	2	2	2	2	3	3	3	2	2
Circuit B		-	-	-	-	-	-	-	-	-	2	2
Number of capacity stages		2	2	2	2	2	2	3	3	3	4	4
Refrigerant		R-410A										
Control		Pro-Dialog+										
Minimum capacity	%	50	50	50	50	50	50	33	33	33	25	25
Capacity split, circuit A/B	%	100/0	100/0	100/0	100/0	100/0	100/0	100/0	100/0	100/0	50/50	50/50
Condensers		Grooved copper tubes, aluminium fins										
Fans		Axial Flying Bird 4 fans with rotating shroud										
Quantity		1	1	1	1	1	1	2	2	2	2	2
Total at flow (high speed)	l/s	3800	3800	3800	3800	5300	5300	7600	7600	7600	10600	10600
Speed	r/s	12	12	12	12	16	16	12	12	12	16	16
Refrigerant connections												
Suction line diameter	in	1-3/8	1-3/8	1-3/8	1-3/8	1-3/8	1-3/8	1-5/8	1-5/8	1-5/8	1-5/8	1-5/8
Liquid line diameter	in	7/8	7/8	7/8	7/8	7/8	7/8	7/8	7/8	7/8	7/8	7/8
Chassis paint colour		Colour code: RAL 7035										

* Nominal evaporating temperature condition: 5°C, outdoor air temperature 35°C, superheat 5 K, 15 m equivalent length
** Weight shown is a guideline only.
*** In dB ref=10-12 W, (A) weighting. Declared dualnumber noise emission values in accordance with ISO 4871 (with an associated uncertainty of +/-3dB(A)). Measured in accordance with ISO 9614-1.
**** In dB ref 20 µPa, (A) weighting. Declared dualnumber noise emission values in accordance with ISO 4871 (with an associated uncertainty of +/-3dB(A)). For information, calculated from the sound power level Lw(A). Please refer to the unit nameplate.

Electrical data

38RBS		039	045	050	060	070	080	090	100	120	140	160
Power circuit												
Nominal power supply	V-ph-Hz	400-3-50										
Voltage range	V	360-440										
Control circuit supply		24 V, via internal transformer										
Maximum start-up current (Un)*												
Standard unit	A	114.2	132.4	141.3	143.7	170.4	209.4	169.4	196.4	240.4	226.2	275.2
Unit with electronic starter option	A	74.7	86.5	93.8	96.2	114.4	139.8	-	-	-	-	-
Unit power factor at maximum capacity**		0.83	0.81	0.81	0.83	0.81	0.78	0.83	0.81	0.79	0.81	0.78
Maximum unit power input**	kW	19.5	22.3	24.5	27.9	31.2	35.8	42.3	45.6	52.5	62.4	71.6
Nominal unit current draw***	A	26.2	30.4	34.6	37.6	44.2	53.8	57.8	64.4	78.8	88.4	107.6
Maximum unit current draw (Un)****	A	35.6	40.0	43.8	48.6	55.8	65.8	74.3	81.8	96.8	11.6	131.6
Maximum unit current draw (Un-10%)†	A	38.0	49.0	51.2	57.8	73.2	79.8	88.1	107.9	117.9	146.4	159.6
Customer-side unit power reserve	kW	Customer reserve at the 24 V control power circuit										
Short-circuit stability and protection		See table "Short-circuit stability current" in Product Selection Data										

* Maximum instantaneous start-up current at operating limit values (maximum operating current of the smallest compressor(s) + fan current + locked rotor current of the largest compressor).
** Power input, compressors and fans, at the unit operating limits (saturated suction temperature 15°C, saturated condensing temperature 65°C) and nominal voltage of 400 V (data given on the unit nameplate).
*** Nominal conditions: suction temperature 5°C, outside air temperature 35°C.
**** Maximum unit operating current at maximum unit power input and 400 V (values given on the unit nameplate).
† Maximum unit operating current at maximum unit power input and 360 V.

Options

Options	No.	Description	Advantages	Use 38RBS
Condenser with anti-corrosion post-treatment	2B	Coils with factory-applied Blygold Polual treatment	Improved corrosion resistance, recommended for urban, industrial and rural environments	38RBS 039-160
Condenser with pre-treated fins	3A	Fins made of pre-treated aluminium (polyurethane and epoxy)	Improved corrosion resistance, recommended for marine environments	38RBS 039-160
Very low noise level	15LS	Acoustic compressor enclosure and low-speed fans	Noise emission reduction at reduced fan speed	38RBS 039-160
Soft starter	25	Electronic compressor starter	Reduced compressor start-up current	38RBS 039-080
Winter operation	28	Fan speed control by frequency variator	Stable unit operation, when the air temperature is between -10°C and -20°C	38RBS 039-160
Main disconnect switch without fuse	70	Factory-installed main electric disconnect switch in the control box	Ease-of-installation and compliance with local electrical regulations	38RBS 039-160
Suction and liquid line valves	92B	Ball valves on the suction and liquid line	Unit isolation from the rest of the refrigerant circuit	38RBS 039-160
JBus gateway	148B	Two-directional communications board, complies with JBus protocol	Easy connection by communication bus to a building management system	38RBS 039-160
Bacnet gateway	148C	Two-directional communications board, complies with Bacnet protocol	Easy connection by communication bus to a building management system	38RBS 039-160
LonTalk gateway	148D	Two-directional communications board, complies with LonTalk protocol	Easy connection by communication bus to a building management system	38RBS 039-160
Remote Pro-Dialog+ user interface	275	Pro-Dialog+ user interface for remote installation	Remote control of the unit and its operating parameters	38RBS 039-160
Replaceable filter drier	277	Filter drier with cartridge to replace hermetic filter	Easy filter replacement without emptying the refrigerant circuit	38RBS 039-160
Temperature sensor kit	278	Room temperature sensor with adjustable set-point and supply air sensor for installation in the air handling unit for capacity control	Optimisation of the unit capacity control, based on the usage conditions	38RBS 039-160
Reinforced ECM filtration for fan VFD*	282A	Fan variable frequency drive compliance to IEC 61800-3 C1 class	Allows unit installation in domestic residential environment by reducing electromagnetic interferences	38RBS 039-160

*38RBS 039-160 with option 28

Remote Pro-Dialog+ interface

This interface can be installed up to 300 m away. It includes a box that can be mounted inside the building. The power supply is provided via a 220 V/24 V transformer supplied.

- Ease-of-use
  - Backlit LCD interface (option) includes a manual control potentiometer to ensure legibility under any lighting conditions.
  - The information is displayed clearly in English, French, German, Italian and Spanish (for other languages please consult Carrier)
  - The Pro-Dialog+ navigation uses intuitive tree-structure menus, similar to the Internet navigators. They are user-friendly and permit quick access to the principal operat-ing parameters: number of compressors operating, suction/discharge pressure, compressor operating hours, setpoint, air temperature.

Pro-Dialog+ interface

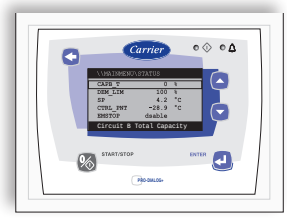

Room temperature and supply air temperature sensors for capacity control (option)

- The room temperature sensor permits temperature adjust-ment using a potentiometer.
- The supply air temperature sensor must be installed in the air handling unit air flow to control the minimum supply air temperature (adjustable via the remote Pro-Dialog+ interface.

Adustable room temperature sensor (option)

Features and advantages

Features

- Compressors
  - Low-noise scroll compressors with low vibration level
  - The compressor assembly is installed on an independent chassis and supported by anti-vibration mountings
  - Dynamic suction and discharge piping support, minimising vibration transmission (Carrier patent)
- Condenser section
  - Vertical condenser coils
  - Protection grilles on anti-vibration mountings to protect the heat exchanger against possible shocks.
  - Low-noise latest-generation Flying Bird IV fans, made of a composite material (Carrier patent) are now even quieter and do not generate intrusive low-frequency noise
  - Fan motor controlled by a variable-frequency controller, to allow reduction of the fan speed, if the extra low noise option 15LS is selected.
  - Rigid fan installation for reduced start-up noise (Carrier patent)
- The refrigerant circuit includes all components for easy connection to a direct-expansion air handling unit: filter drier, moisture sight glass, high and low pressure switch, as well as solenoid valves for pumpdown (to be installed on the evaporator). All pipes and the refrigeration components are welded. From size 38RBS 140 onwards, two independent refrigerant circuits ensure partial cooling capacity in all circumstances, and more flexible operation at part load.
- Year-round operation
  The 38RBS units are designed for year-round operation, and operate without the use of accessories down to -10°C. A control algorithm intelligently manages operation of the fans. Option 28 allows stable unit operation at air tempera-tures below -10°C and down to -20°C.

Easy and fast installation

- Physical features
  - Small unit footprint with a low height (1371 mm) for easy installation in any application.
  - The unit is enclosed by easily removable panels, covering all components (except air heat exchanger and fans).
- Simplified electrical connections
  - A single power supply point without neutral
  - Main disconnect switch (option 70) with high trip capacity
- The control circuit of the 38RBS units is equipped with a standard low-voltage transformer (24 V). This transformer can also supply the other electrical components of the air conditioning system: room thermostat and pumpdown solenoid valves.
- Fast commissioning
  - Systematic factory operation test before shipment
  - Quick-test function for step-by-step verification of the instruments, electrical components and motors.

Economical operation

- Increased energy efficiency at part load
  The refrigerant circuit includes several compressors connected in parallel. At part load, around 99% of the operating time, only the compressors that are absolutely necessary operate. At these conditions the compressors operating are more energy efficient, as they use the total condenser and evaporator capacity.
- Reduced maintenance costs
  - Maintenance-free scroll compressors
  - Fast diagnosis of possible incidents and their history via the Pro-Dialog+ control
  - R410A refrigerant is easier to use than other refrigerant blends

Environmentally balanced

- Non-ozone depleting refrigerant R410A
  - Chlorine-free refrigerant of the HFC group with zero ozone depletion potential
  - Very efficient - gives an increased energy efficiency ratio (EER, COP and ESEER)
- Leak-tight refrigerant circuit
  - Brazed refrigerant connections for increased leak-tightness (factory nitrogen charge)
  - Verification of pressure transducers and temperature sensors without transferring refrigerant charge.

Superior reliability

- State-of-the-art concept
  - Cooperation with specialist laboratories and use of limit simulation tools (finite element calculations) for the design of the critical components, e.g. motor supports, suction/discharge piping, etc.
- Auto-adaptive control
  - Automatic compressor unloading in case of abnormally high condensing pressure. If an anomaly occurs (e.g. fouled air heat exchanger coil, fan failure) the condensing unit continues to operate, but at reduced capacity.
- Exceptional endurance tests
  - Corrosion resistance tests in salt mist in the laboratory
  - Accelerated ageing test on components that are submitted to continuous operation: compressor piping, fan supports
  - Transport simulation test in the laboratory on a vibrating table.

Controls

Pro-Dialog+ control

Pro-Dialog+ combines intelligence with operating simplicity. The control constantly monitors all machine parameters and precisely manages the operation of compressors and fans for optimum energy efficiency.

- Energy management
  - Seven-day internal time schedule clock: permits unit on/off control and operation at a second setpoint
  - Setpoint reset by the user via a room sensor (option).
- Integrated features
  - Night mode: capacity and fan speed limitation for reduced noise level
  - Solenoid valve control for evaporator pumpdown (valves supplied as a kit with the unit).

Carrier Comfort Network (CCN) operating mode

Carrier Comfort Network (CCN) operating mode

A simple two-wire communication bus between the RS485 port and the Carrier Comfort Network offers multiple remote control, monitoring and diagnostic possibilities. Carrier offers a vast choice of control products, specially designed to control, manage and supervise the operation of an air conditioning system. Please consult your Carrier representative for more information on these products.

Remote operating mode with volt-free contacts (standard)

- Start/stop: opening of this contact will shut down the unit
- Alarm indication using an LED: availability of a volt-free contact that indicates the presence of a major fault that has led to the shut-down of one or two refrigerant circuits.
- User safety: this contact can be used for any customer safety loop, opening of the contact generates a specific alarm.

Operating limits, Standard units

Operating range

38RBS		Minimum	Maximum
Evaporator			
Suction temperature (dew point)	°C	-5	15
Condenser			
Entering air temperature*	°C	-10	48

* For transport and storage of the 38RBS units the minimum and maximum allowable temperatures are -20°C and +48°C. It is recommended that these temperatures are used for transport by container. Option 28 allows stable unit operation at air temperatures below -10°C and down to -20°C.

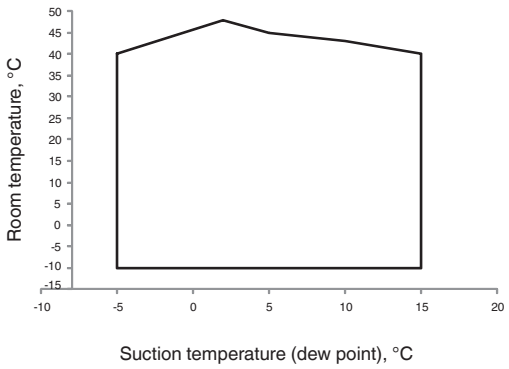

Dimensions/clearances

38RBS 039-080

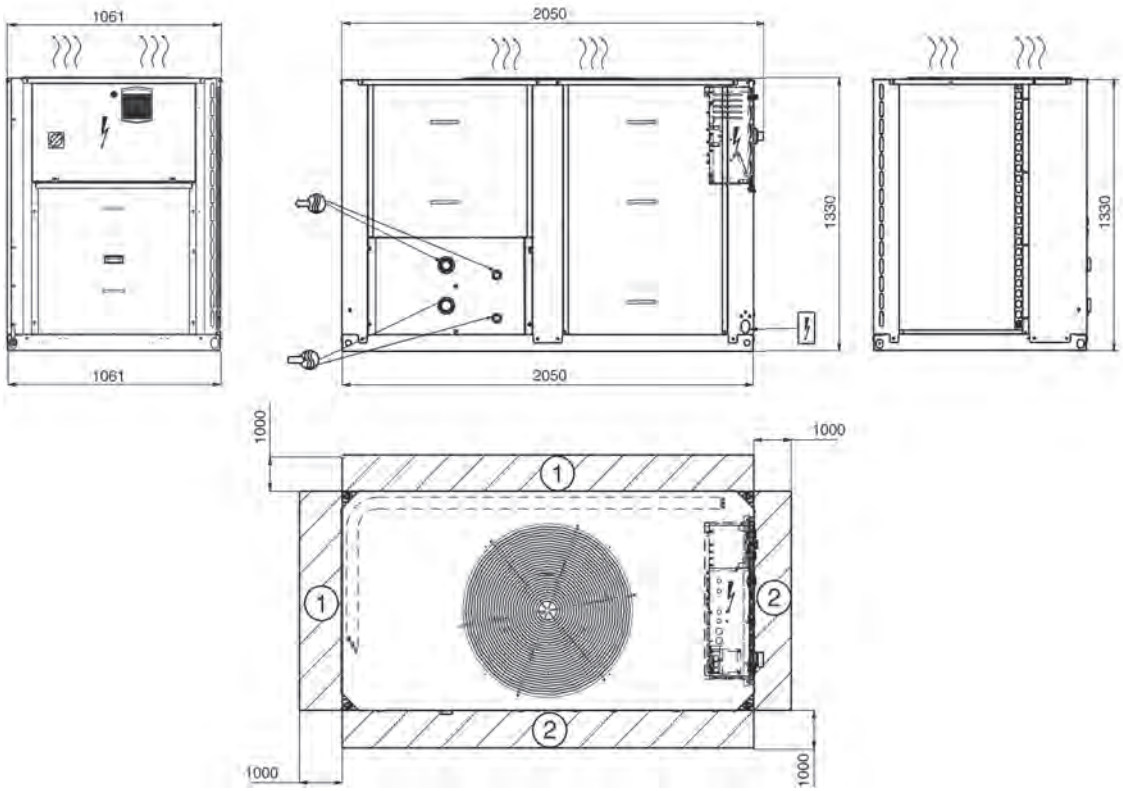

38RBS 090-120

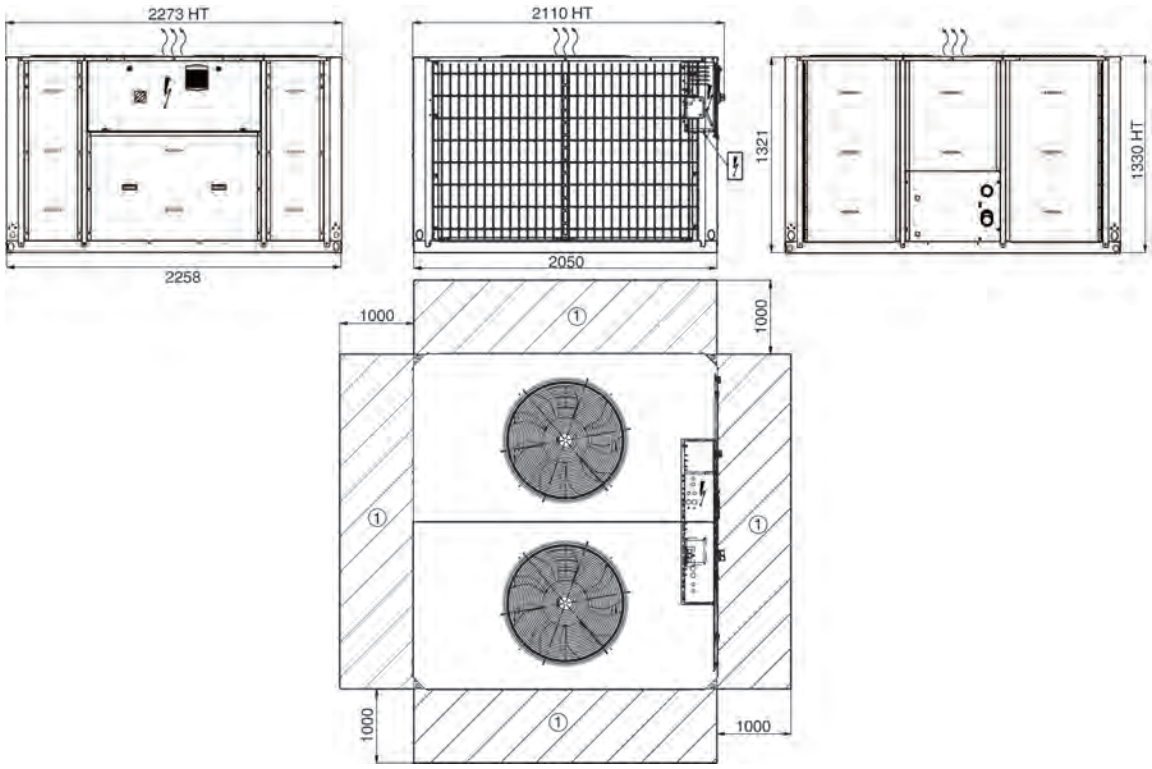

All dimensions are given in mm.

38RBS 140-160

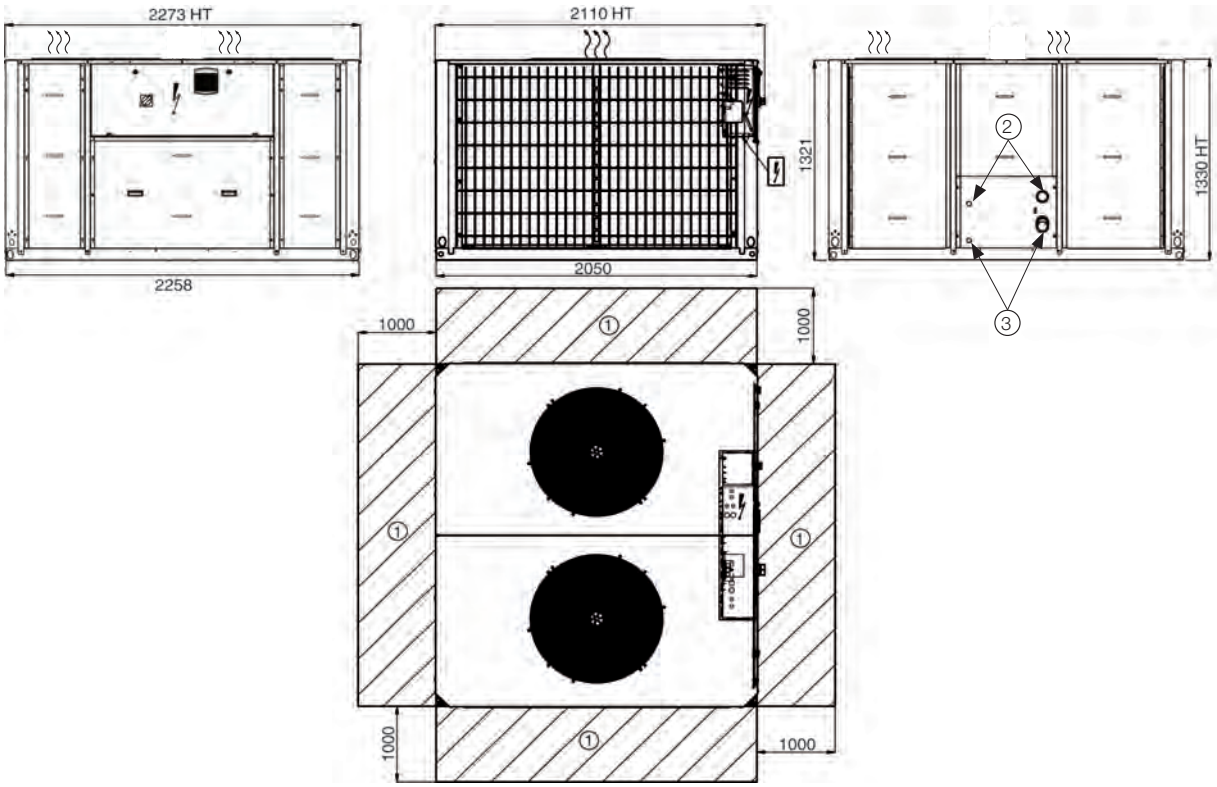

Legend:
All dimensions are given in mm.

1 Required space for maintenance

2 Refrigerant inlet

3 Refrigerant outlet

Power wiring connection

Power supply

Air outlet, do not obstruct

Notes:

A Non-certified drawings.
Refer to the certified dimensional drawings supplied with the unit or available on request, when designing an installation.
For the location of fixing points, weight distribution and coordinates of the centre of gravity refer to the certified dimensional drawings.

B In multiple-unit installations (maximum four units), the side clearance between the units should be increased from 1000 to 2000 mm.

C The height of the solid surface must not exceed 2 m.

HT = Overall dimensions

50CJ

NEW

AIR TREATMENT

Compact footprint

Double-wall construction

Built-in variable frequency drive

PLC control

Close control unit specially designed for the air handling requirements (filtration, temperature and humidity control) of computer rooms, telecommunications rooms and specific purpose rooms (electronics, sensitive storage, medical, controlled atmosphere rooms, etc.).

Double-skin construction. Fan with frequency inverter flow rate adjustment, to ensure the flow rate complies with the on-site pressure.

This unit is quick and easy to install, and particularly simple to use.

50CJ W : Unit supplied with chilled water.

Range

Model	W5	W8	W12	W16		W27		W39		W59	
Nominal air flow rate *	1300	2000	2500	3000	4000	5000	6000	7000	8000	10000	12000

* Air flow rate adjustable by built-in frequency inverter.

Quick selection

50CJ W

Model		W5	W8	W12	W16		W27		W39		W59	
Air flow rate	m³/h	1300	2000	2500	3000	4000	5000	6000	7000	8000	10000	12000
Cooling capacity	kW	5	8	10,5	14,7	18,5	23,5	27	34	38	48	55
Water flow rate	m³/h	0,86	1,4	1,8	2,5	3,2	4	4,6	5,8	6,5	8,2	9,4
Pressure drop	mWC	4,3	4,9	5,1	4,7	7	4,1	5,2	7,3	8, 9	5,5	6,9

Specifications: total cooling capacity, pure water 7°C/12°C, air 24°C 45%. Pressure drop with control valve.
Cooling capacity for a maximum ΔT in air of 12°C.

Correction factors	7/12°C	8/13°C
22°C/45%	0,84	0,79
24°C/45%	1	0,9

Hot water coil

Model		W5	W8	W12	W16		W27		W39		W59	
Air flow rate	m³/h	1300	2000	2500	3000	4000	5000	6000	7000	8000	10000	12000
Heating capacity	kW	4,5	6,2	7,5	11,9	13,7	17,8	19,5	25,8	27,6	37,5	40,9
Water flow rate	m³/h	0,21	0,27	0,33	0,5	0,6	0,8	0,9	1,1	1,2	1,65	1,8
Pressure drop	mWC	1,3	2,6	4,3	2,1	2,8	1	1,2	1,7	1,9	2,8	3,3

Specifications: heating capacity, air 20°C, pure water 80°C/60°C, pressure drop with control valve.
Correction factors to apply to the heating capacity for 90°C/70°C water temperature range: 1.23 and 45°C/35°C: 0.37.

Electric heater

Model		W5	W8	W12	W16	W27	W39	W59
Heating capacity	kW	3	3	6	9	12	18	24

Ventilation

Model		W5	W8	W12	W16	W27	W39	W59
Air flow rate	m³/h	1300	2000	2500	4000	6000	8000	12000
Maximum operating pressure with G4 or F7 filtration		240	98	113	125	160	65	57

Maximum operating pressure dependent on air flow rate. Take away approximately 20 Pa if there is a hot water coil on 50CJ.
The operating point can be adjusted directly via a built-in voltage regulator. Hence all the air flow/operating pressure combinations are possible, with the values in the table above as the maximum values.

Electrical specifications

Indoor unit

		W5	W8	W12	W16	W27	W39	W59
Fan motor assembly	V	400						
	kW	0,55			0,75	1,1	1,5	2,25
	A	2,6			3,3	5	6,6	9,9
Control circuit	V	24						
	A	1						
Electric heater (option)	V	400						
	kW	3		6	9	12	18	24
	A	4,3		8,7	13	17,3	26	34,6
Humidifier (optional) max. value	V	400						
	kW	2,25			6			
	A	3,2			8,7			
Total current without option	A	3,6			4,3	6	7,6	10,9
	Main switch rating	16						
Total current all options	A	11,1	11,1	15,5	26	32,1	42,3	54,2
	Main switch rating	16			40		63	

Sound pressure level

Indoor unit

Model		W5	W8	W12	W16		W27		W39		W59	
Air flow rate	m³/h	1300	2000	2500	3000	4000	5000	6000	7000	8000	10000	12000
Sound pressure level	dBA	49	53	58	57	61	59	63	60	63	60	64

Sound pressure level of indoor unit at 2 m unrestricted space, air supply connected, +/-3dB.

Accessories

- Support base for air supply via raised floor:
  - Bottom version (225 to 320 mm)
  - Top version (320 to 525 mm)
- Air supply plenum
- Acoustic plenum with sound trap
- Motorised damper on intake section
- Water leak detection
- Fire thermostat
- Hydraulic connection kit (chilled water and hot water coils)
- LON gateway
- C/O sensor

Options

- Electric heater
  - Fan-controlled operation
  - 2-stage control (3 kW electric heater excepted)
  - 2-stage or TRIAC control
  - Two high-limit safety thermostats with automatic and manual reset
- Hot water coil
  - 1-row coil made of copper tubes with aluminium fins
  - 2- or 4-way control valve, fitted and connected
  - Optional flexible connections
- Humidifier
  - Immersed electrode humidifier with humidifier information available directly on the Carrier CCU Controller:
    - Stainless steel large surface area electrodes
    - 3 kg steam per hour, nominal flow rate < 3000 m^3/h
    - 8 kg steam per hour, nominal flow rate < 3000 m^3/h,
    - Steam cylinder in a single easy to remove component
    - Filling solenoid valves
    - Drain pump
    - Electronics board for operation management
    - Diffusion jet
    - Water supply connection kit
  - Operates on municipal water supply only (water conductivity of between 350 and 1250 µS and hardness 15 to 30°F). Do not use deionised or softened water.

Control

- Carrier CCU Controller
  - 160-character display showing the operating instructions, operating states, faults and solutions. Configurable controller.
  - Two fault levels
  - Monitoring of operating times
  - RS 485 output with Jbus/ModBus protocol
  - Can manage rotations, backups and top-ups between units
  - LON gateway
  - C/O sensor

Installation

UNDER installation: reversed air supply

OVER installation: top air supply

Installation 1

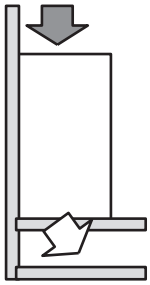

Air Supply via raised floor

Installation 3

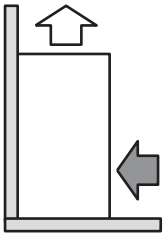

Front return

Installation 4

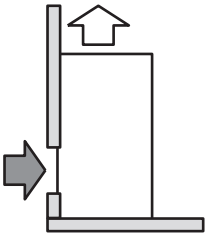

Rear return

Assembly 5

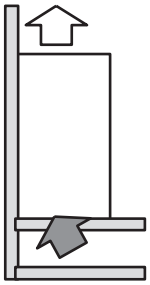

Return air belmow

Features and advantages

- Casing
  - Double-wall construction
  - RAL 7035 grey pre-lacquered panel, removable:
    - 1 mm pre-lacquered exterior panels,
    - Glass wool, thickness 25 mm, class M0,
    - 0.8 mm galvanised interior panels
- Filtration
  - F2SI type filter cells, efficiency 90 % as per ASHRAE gravimetric test (G 4)
  - Optional F7 opacimetric filtration
  - Optional dual filtration (G4+F7)*
  - Filter cells tightly compressed against counter-frame by a gasket to ensure a completely leaktight seal
  - Fouling level monitored by an analogue pressure sensor
- Cooling coil cross-section
  - Coil made of copper tubes, aluminium fins
  - Condensate drain pan
  - Model W with 2- or 4-way control valve fitted and connected. Optional thermally insulated flexible connections
- Ventilation section
  - Direct coupling centrifugal fan
  - Three-phase 400V electric motor, 4 poles, class F
  - Frequency inverter fitted for air flow rate control
  - Air flow rate monitored by an analogue pressure sensor
- Electrics box
  - Electrical power and control box consisting of:
  - Power supply: three-phase 400 V/50 Hz + E
  - Emergency stop master switch
  - Protected transformer (three-phase, 400/24 V)
  - Protection and control of fan motor, and of humidifier and electric heater depending on options selected
  - Regulated by Carrier CCU Controller
  - Return air dry-bulb temperature control
  - Return humidity control, in supply or dehumidification mode (optional)
  - Options available: water leak detection, fire thermostat and supply air low-limit monitoring
  - Remote control and fault summary contact
  - Condensate drain pump (optional)

* except for models W 5/8/12

Connections/Weights

Indoor unit

Model		W5	W8	W12	W16	W27	W39	W59
Weight of indoor unit	kg	115	120	125	280	310	375	480

Chilled water coil

Inlet/outlet connections	G ½"M	G ¾"M	G ¾"M	G¾" M	G 1"M	G 1"M	G 1" ¼ M
Condensate draining*	Ø 32 mm						

Hot water coil

Inlet/outlet connections	G ½"M	G ½"M	G ½"M	G ½"M	G ¾"M	G ¾"M	G ¾"M

* Drain connections if optional pump fitted: Diam. 6 mm

Dimensions

Indoor unit						
Model	**Dimensions (mm)**					**Weight (kg)**
	A	**A'**	**B**	**B'**	**C**	
W5	675	125	500	183	1700	115
W8	675	125	500	183	1700	120
W12	675	125	500	183	1700	125
W16	850	125	780	183	1900	280
W27	1150	125	780	183	1900	310
W39	1490	120	780	183	1900	375
W59	1990	120	780	183	1900	480

Dimensions

UNDER 1 installation

W5/8/12

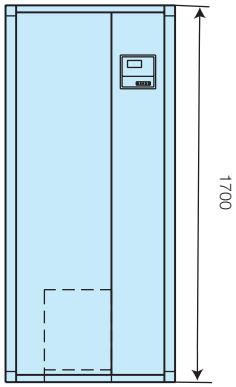

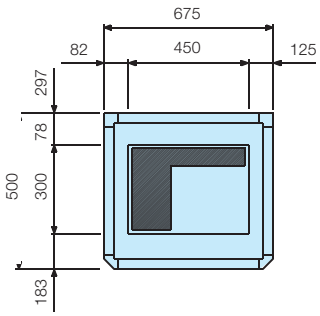

W16

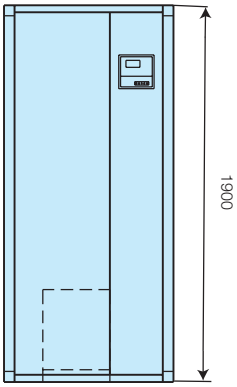

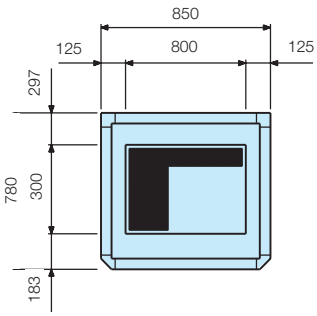

W27

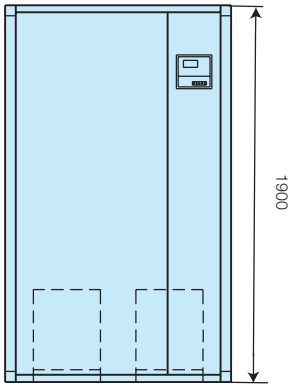

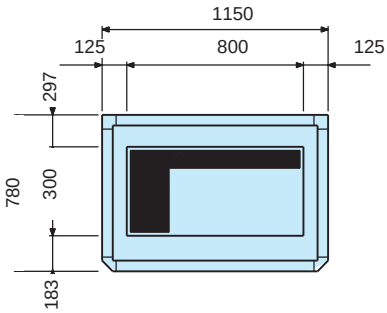

W39

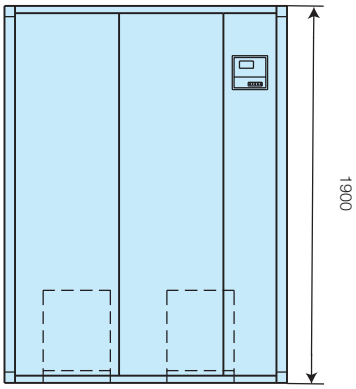

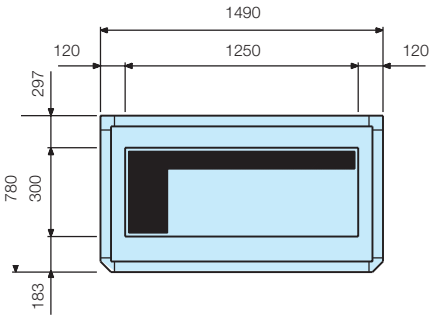

W59

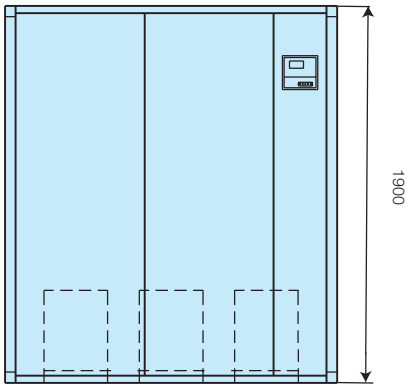

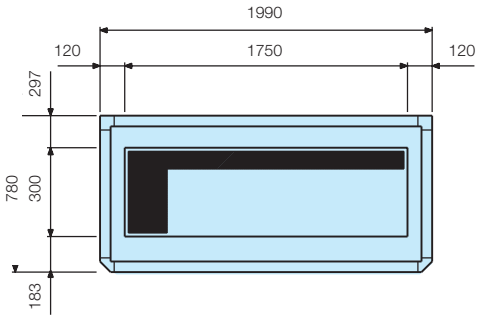

Note: All dimensions are in mm

OVER 3 installation

W5/8/12

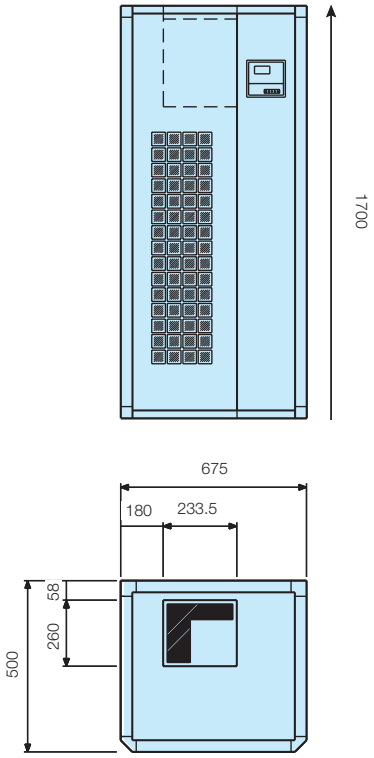

W16

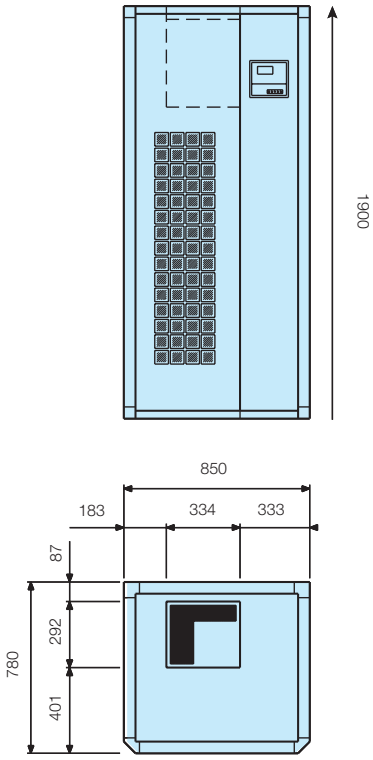

W27

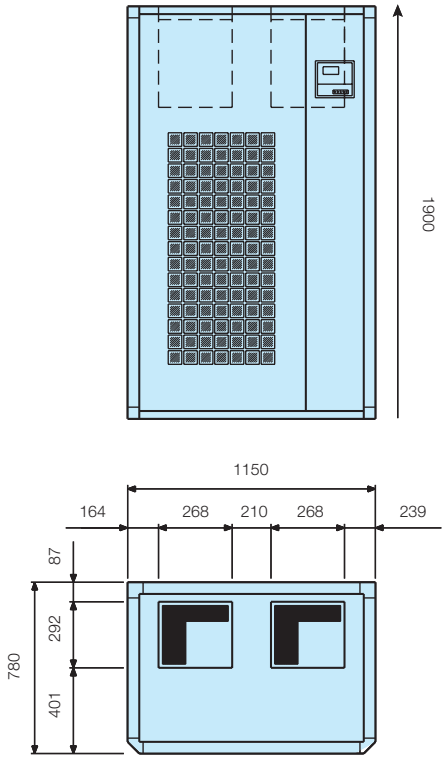

W39

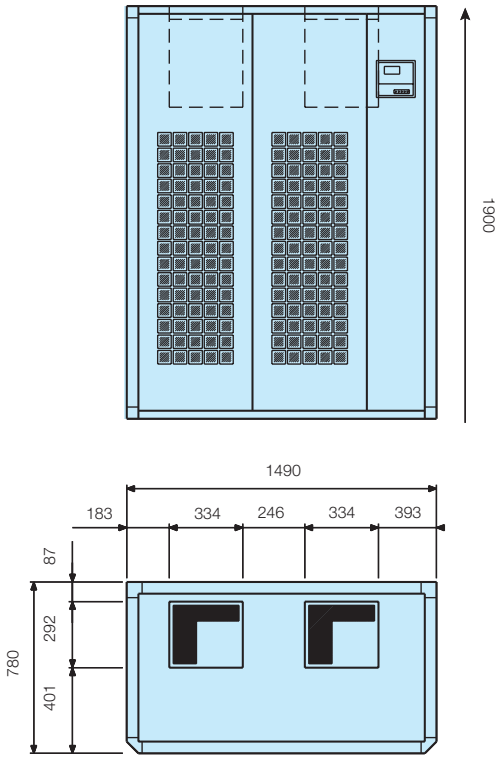

W59

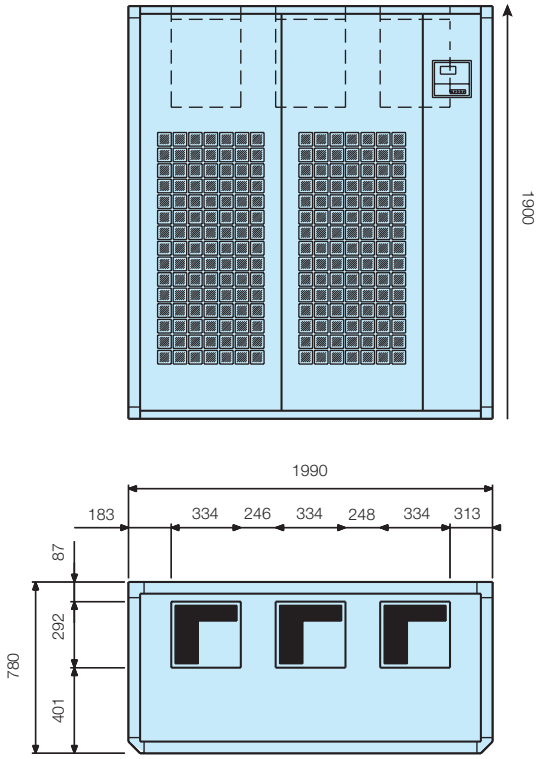

Note: All dimensions are in mm

Over 4 installation

W5/8/12

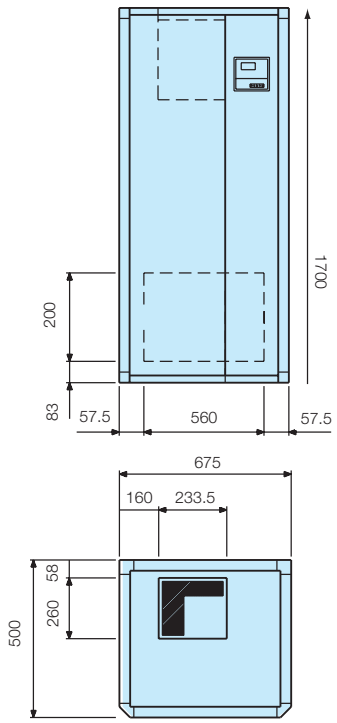

W16

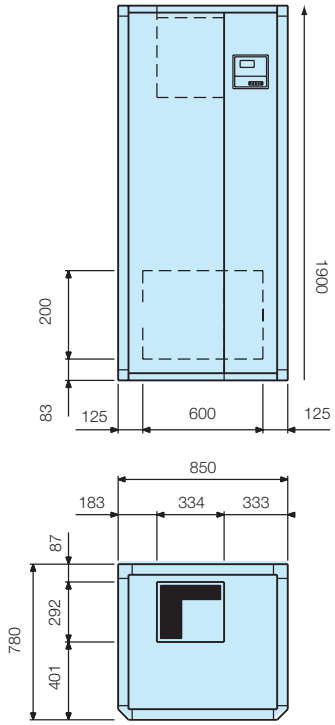

W27

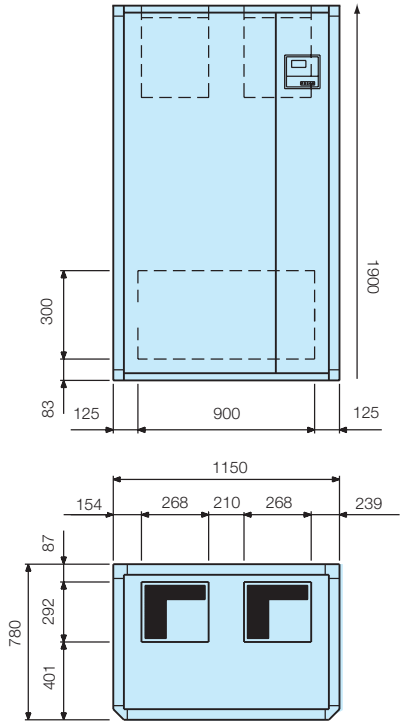

W39

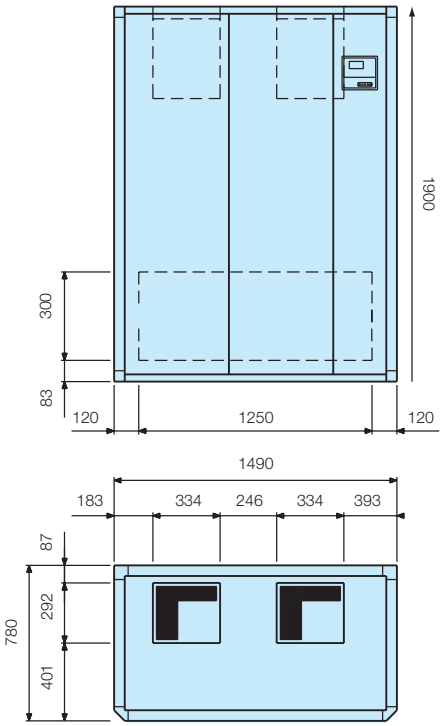

W59

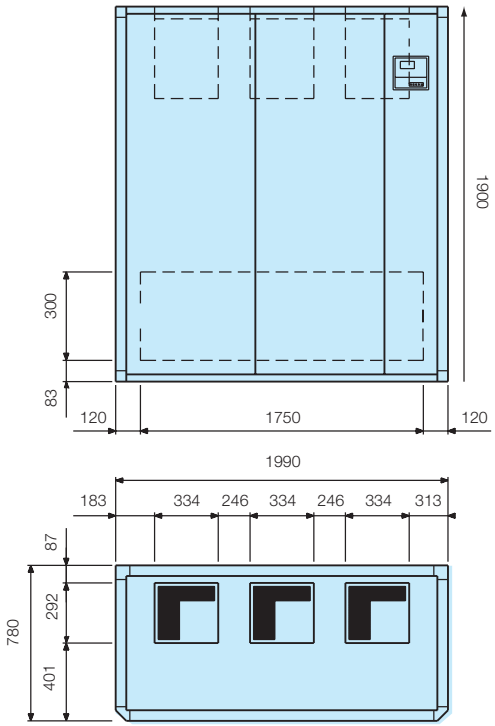

Note: All dimensions are in mm

Over 5 installation

W5/8/12

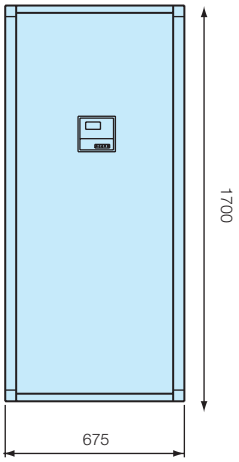

W27

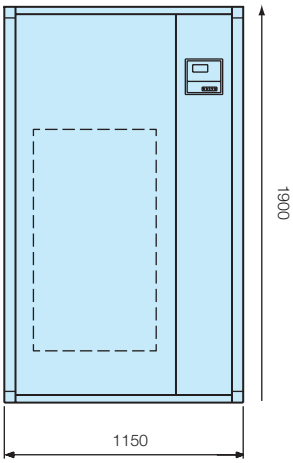

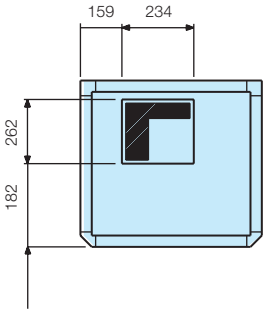

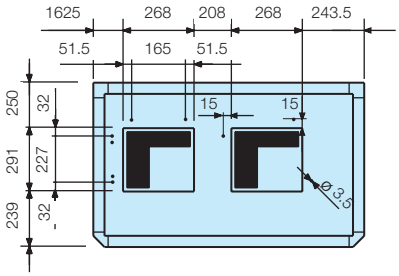

W39

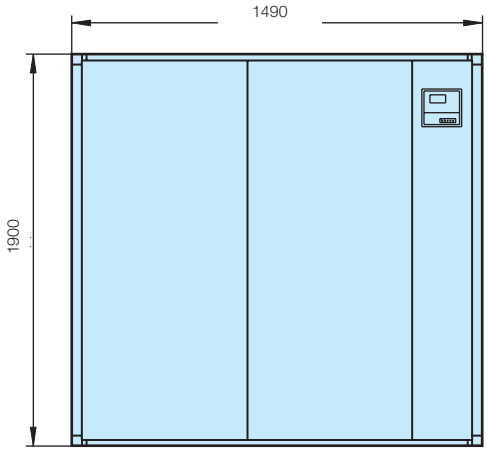

W59

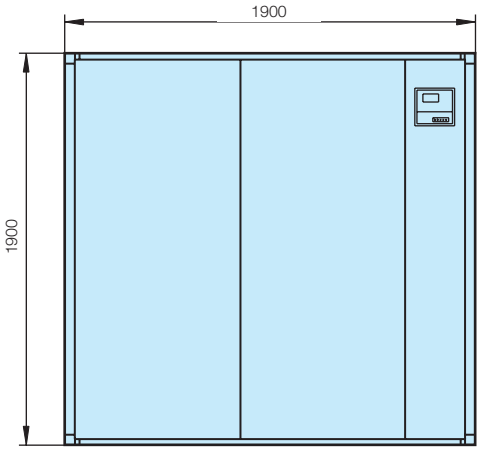

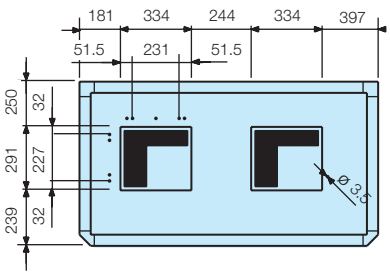

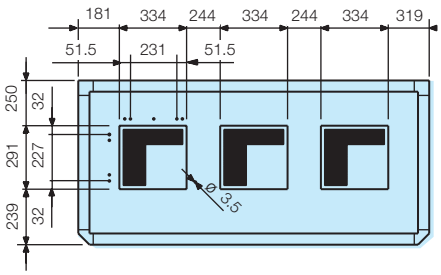

Note: All dimensions are in mm

50CO

NEW

Close control unit specially designed for spaces with high heat loads or sensitive rooms (data centres, computer rooms, switch rooms, etc.).

Its built-in technologies - self-regulating control that adjusts to room loads and electronically commutated motor - keep its energy consumption down. 50CO boasts a sleek design that blends into any space.

Wide range of chilled water cabinets

Compact and attractive design

EC motor for energy savings

Auto-adaptive control

Easy to install

Quick selection guide (except W115)

W range - Chilled Water

Model		W40		W53		W78		W100		W115	
Air flow rates	m³/h	Nominal*	Maximum**	Nominal*	Maximum**	Nominal*	Maximum**	Nominal*	Maximum**	Nominal*	Maximum**
		10 000	13 300	13 300	13 300	18 800	20 500	24 500	27 000	27 000	27 500
Sensible cooling capacity	kW	40	45	55	53	78	78	100	100	127	130
Nominal capacity	kW	3.7		3.7		7.1		7.1		9.6	
Nominal current	A	6.4		6.4		11.8		11.8		15.7	

* Conditions: return air at 24°C with 45% RH. Water temperature range of 7/12°C. Excluding optional electric heater and humidifier
** Conditions: return air at 26°C with 40% (RH). Water temperature range of 10/15°C. Excluding optional electric heater and humidifier

Options (available capacities)

Electric heaters

Model		W40	W53	W78	W100	W115	
Capacity	kW	12	18	24	33.6	32.4	43.2
Total current	A	17.3	26	34.7	48.6	46.77	62.35

Hot water coil

Model		W40		W53		W78		W100		W115	
Air flow	m³/h	Nominal	Maximum	Nominal	Maximum	Nominal	Maximum	Nominal	Maximum	Nominal	Maximum
		10 000	13 300	13 300	13 300	18 800	20 500	24 500	27 000	27 000	27 500
Heating capacity *	kW	36	40	44	44	63	66	71	73	-	-
Heating capacity **	kW	18	21	23	23	33	34	37	38	-	-

* 17°C - 80/60°C
** 17°C - 45/40°C

Humidifier

Model		W40 to W115
Steam flow rate	kg/h	8
Electrical capacity	kW	6
Current	A	8.7

Ventilation

Model		W40		W53		W78		W100		W115	
Air flow rates	m³/h	Nominal	Maximum	Nominal	Maximum	Nominal	Maximum	Nominal	Maximum	Nominal	Maximum
		10 000	13 300	13 300	13 300	18 800	20 500	24 500	27 000	27 000	27 500
Operating pressure max.with G4 filter	Pa	400	171	229	229	400	400	343	157	400	400
Operating pressure max. with F7 filter	Pa	400	60	140	140	400	400	261	68	400	385

Options

- Electric heater
  - Controlled by fan
  - 2-stage or TRIAC control
  - High-limit safety thermostat with automatic and manual reset
- Hot water coil
  - 1-row coil made of copper tubes with aluminium fins
  - 2 or 4-way control valve, fitted and connected
- Humidifier

Humidifier with immersed electrodes and a board to relay all information relating to the humidifier directly to the automatic CARRIER CCU Controller:

- Stainless steel, large surface area electrodes
- Flow rates of 8 kg/h, depending on the model
- Steam cylinder in a single easy to remove component
- Drain pump and filling solenoid valve
- Electronic control panel
- Distributor pipe

For use with city water only (with a conductivity of between 350 and 1250 µS and a hardness of between 15 and 30°F). Do not use deionised or softened water.

Chilled water operation

50CO W (Chilled Water)

NEW The fan also has a ModBus card which allows faults and settings such as the actual power input, current, rotation speed, etc. to be transmitted.

UNDER configuration

Air discharge into raised flooring

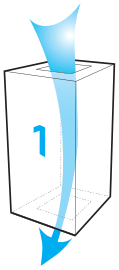

OVER configuration

Front return air (except W 115)

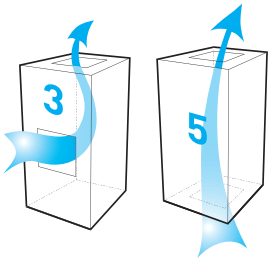

Bottom return air (except CW 115)

Features and advantages

- Casing
  - Double-wall construction (M0/A1 fire resistance)
  - Detachable pre-coated grey (RAL 7035 and RAL 7024) panels
  - 0.8mm painted pre-coated exterior panel
  - 25 mm mineral wool insulation
  - 0.8 mm galvanised interior panels
- Filtration
  - Filter cells: G4, F7
  - Holds filter cells pressed against the counter frame with the gasket directly on the filter cells
  - Filter restriction monitored by an analogue sensor. Restriction values displayed by controller
- Cooling coil section
  - Copper tubes, aluminium fins
  - Aluminium or stainless steel condensate drain pan
  - Stainless steel coil casings (option)
  - Fitted and connected two-way or three-way control valve
- Ventilation section
  - Plug fan coupled with an induction motor or an electronically commutated (EC) motor
  - EC motor: fan speed adjusted by a potentiometer or automatically by the controller based on room loads (system air control)
  - The fan also has a ModBus card which allows faults and settings such as the actual power input, current, rotation speed, etc. to be transmitted
- Electrics box

Electrical power and control box consisting of:
  - Power supply (three phase, 400 V, earth)
  - Main disconnect switch
  - Protected transformer (three phase, 400 V, 50 Hz)
  - All electrical components protected and controlled by a circuit breaker and contact switch
  - Automatic CARRIER CCU Controller
  - Monitoring of return air dry-bulb temperature
  - Monitoring of return air humidity during supply or dehumidification
  - Options: water leak detection
  - Remote control and fault summary contact
- Accessories (options)
  - Free cooling box
  - Support base for delivering supply air into a raised floor
  - Cased base with grille or damper
  - Supply plenum
  - Motorised intake damper
  - Fire thermostat
  - Supply air low-limit sensor
  - LON gateway
  - Management of pressure in raised floor
  - Changeover thermostat

Controls

- CARRIER CCU Controller control system
  - 160-character display shows operating instructions, operating states, faults and solutions. Configurable controller.
  - Two fault levels
  - Monitoring of running times
  - RS485 output with a Jbus / ModBus protocol
  - Master/slave operation possible
  - LON gateway (optional)
  - Management of pressure in raised floor (optional)
  - Changeover thermostat (optional)
  - Bus management between the centrifugal plug fan and the controller
  - Transmits fan faults and settings such as the actual power input, current, rotation speed, etc. to the controller

Dimensions

W40 - W53

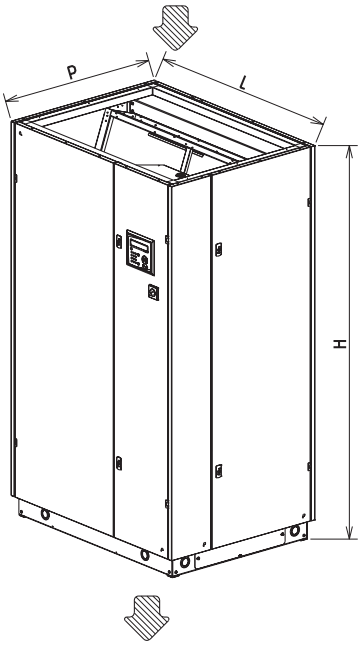

UNDER 1

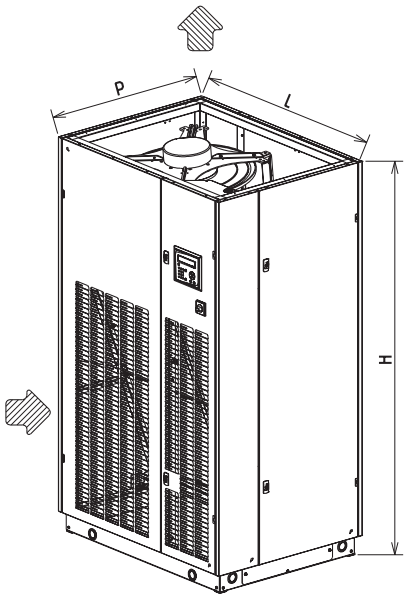

OVER 3

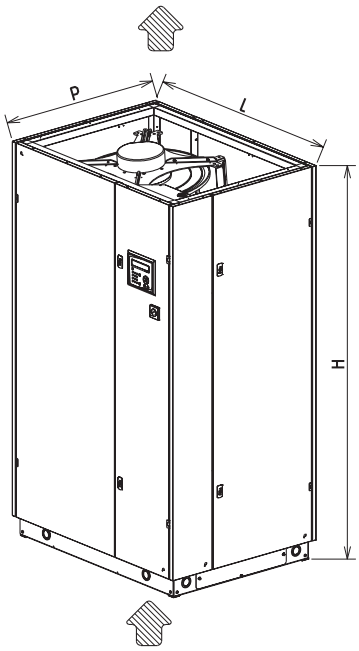

OVER 5

W		H	L	P
40	mm	1990	1190	890
53	mm	1990	1520	890

W78 - W100

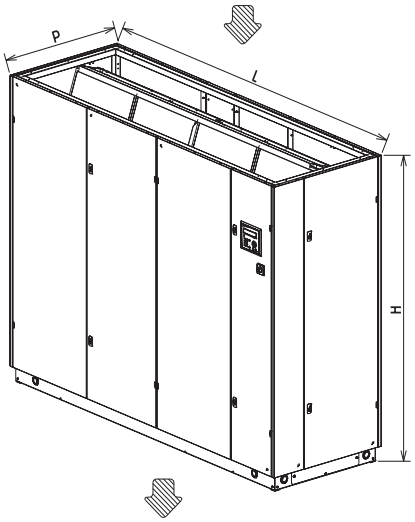

UNDER 1

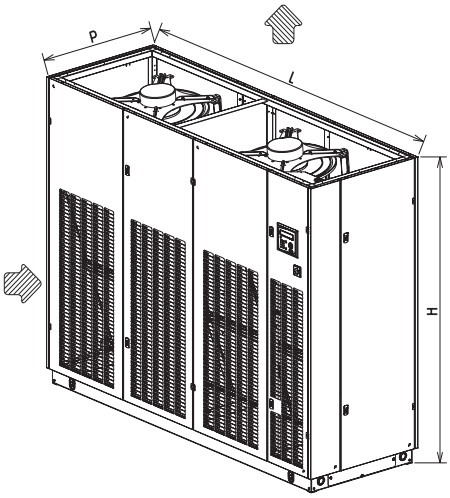

OVER 3

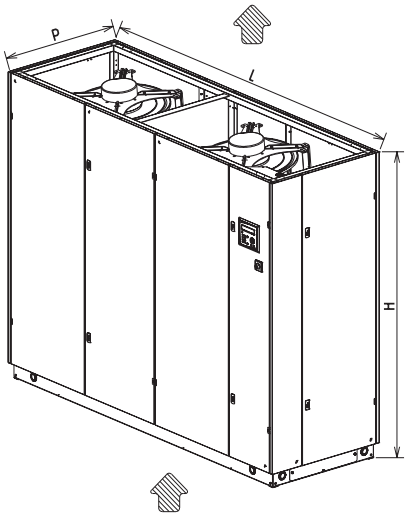

OVER 5

W		L	P	P
78	mm	2070	890	890
100	mm	2620	890	890

W115

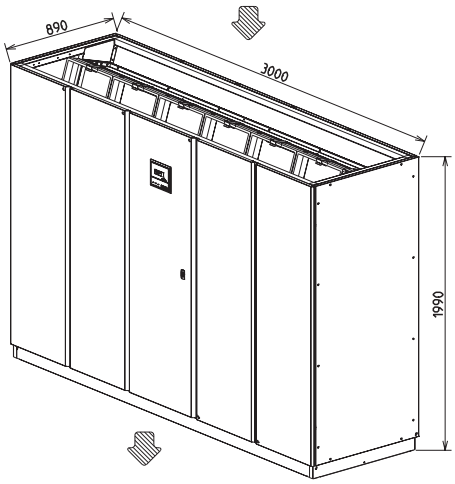

UNDER 1

Weight

Chilled water

Model		W40	W53	W78	W100	W115
Weight	kg	350	385	545	635	730

50HB/HF

NEW

AIR TREATMENT

Compact horizontal

Reduced dimensions

Centrifugal fans

Ducted aspiration and discharge

The 50HB/HF heat pumps and cooling unit are packages air to air units, of horizontal compact construction, made for operation indoors.

They are equipped with centrifugal fans, air coils, scroll compressor and electronic control with microprocessor, optimized components for the R-410A refrigerant.

They are appropriate for air conditioning applications in medium power in offices, commercial and industrial spaces where the facade aesthetics must be preserved.

All of the units are tested and checked in factory.

50HB series : air-to-air cooling units of horizontal compact construction

50HF series : reversible air-to-air heat pump units of horizontal compact construction

50HB/HF series : 1 cooling circuit, 1 scroll compressor, 6 models: 55 / 65 / 80 / 90 / 120 / 160

Physical data

50HB/HF		55	65	80	90	120	160
Cooling							
Cooling capacity *	kW	12,5	15,3	20,1	21,5	27,1	35,9
Power input ***	kW	5,2	6,6	7,4	8,5	11,0	15,4
EER performance		2,38	2,30	2,70	2,53	2,47	2,33
Heating							
Heating capacity **	kW	14,2	16,9	21,1	23,1	30,5	41,0
Power input ***	kW	4,8	5,7	6,4	7,4	9,3	13,3
COP performance		2,93	2,96	3,29	3,13	3,28	3,10
Outdoor circuit fan							
Nominal air flow	m^3/h	4.100	4.600	6.500	7.000	10.000	12.200
Available static pressure	mm.w.c	9	9	10	10	12	12
Type		Centrifugal					
Number		1					
Motor output	kW	1,1	1,5	1,5	2,2	2,2	3,0
Power input	kW	0,77	1,01	1,14	1,33	1,37	2,03
Speed	r.p.m.	1.125	1.207	828	859	589	630
Indoor circuit fan							
Nominal air flow	m^3/h	2.500	3.100	4.000	4.600	6.000	7.000
Available static pressure	mm.w.c	5,0	5,0	6,2	6,2	6,2	7,5
Type		Centrifugal					
Number		1					
Motor output	kW	0,55	1,1	1,1	1,5	1,5	3,0
Power input	kW	0,35	0,63	0,67	0,94	1,20	1,94
Speed	r.p.m.	1.115	1.340	1.051	1.150	988	1.168
Compressor							
Type		Scroll					
Compressor number		1					
Circuit number		1					
Oil type		Copeland 3MAF 32cST, Danfoss POE 160SZ, ICI Emkarate RL 32CF, Mobil EAL Artic 22CC					
Voulme of oil	l	1,6	1,6	1,6	3,0	3,3	3,3
Electrical characteristics							
Electrical power supply		400 V / III ph / 50 Hz (±10%)					
Power supply		3 Wires + Ground					
Maximum absorbed current							
Compressor	A	15,0	19,0	19,0	22,0	29,0	35,0
Outdoor fan	A	2,7	3,6	3,6	5,0	5,0	6,9
Indoor fan	A	1,6	2,7	2,7	3,6	3,6	6,9
Control	A	2,0	2,0	2,0	2,0	2,0	2,0
Total	A	21,3	27,3	27,3	32,6	39,6	50,8
Refrigerant							
Type		R-410A					
Global warming potential (GWP) ****		2.088					
Charge	kg	2,5	3,0	4,5	4,9	5,0	6,2
Environment impact	t CO_2e	5,2	6,3	9,4	10,2	10,4	12,9
Dimensions							
Length	mm	1.420	1.420	1.760	1.760	2.300	2.300
Width	mm	1.065	1.065	1.414	1.414	1.820	1.820
Height	mm	576	576	701	701	824	824
Weight	kg	245	253	332	375	472	521
Ø Condensate evacuation		3/4”					

* Cooling capacity calculated in accordance with the EN-14511-2013 standard given for indoor temperature conditions 27ºC, 50% RH and 35ºC outdoor temperature.
** Heating capacity calculated in accordance with the EN-14511-2013 standard given for indoor temperature conditions 20ºC and 6ºC WB outdoor temperature.
*** Total power input by compressor and motorised fans under nominal conditions calculated in accordance with the EN-14511-2013.
**** Climatic warming potential of a kilogram of fluorinated greenhouse gas in relation to a kilogram of carbon dioxide over a period of 100 years.

Power level and sound pressure level dB(A)

A) The sound power level in the outdoor fan to be taken into account for the silencer calculation:

50HB/HF	55	65	80	90	120	160
dB(A)	80,5	82,7	74,4	76,3	83,5	83,3

B) The sound power level in the indoor fan to be taken into account for the silencer calculation:

50HB/HF	55	65	80	90	120	160
dB(A)	72.0	77.4	80.4	77,1	79,2	77,1

C) The sound pressure level of the unit, with the return and supply connections ducted, measured at a distance of 5 meters, in open field, the directivity at 2 and 1.5 meters from the earth is:

50HB/HF	55	65	80	90	120	160
dB(A)	69.3	71.6	69.4	70.8	70.7	71.2

Note: The sound pressure level depends on the installation conditions and, as such, it only indicated as a guide.

Unit configuration

- Casing
  - Casing made of galvanised steel metal with polyester paint, colour RAL 7035, dried in oven and thermally isolated
  - Self-supporting frame and and fan access panels, cooling circuit and electric panel
- Outdoor circuit
  - Centrifugal fan with coupling by pulleys and belts
  - Anti-bird grid, in aspiration
  - Condensates drain pan with asphaltic paint - Independent drain
  - Copper pipe and aluminium fins coil
- Indoor circuit
  - Centrifugal fan with coupling by pulleys and belts
  - Reusable air filter
  - Condensate collection pan. Independent drain
  - Copper pipe and aluminium fins coil
- Cooling circuit
  - Scroll compressor, assembled over shock absorbers - Thermal protection
  - Thermostatic expansion valve with outdoor pressure external equalisation
  - Four-way valve for cycle inversion and crankcase heater (in heat pump units)
  - Anti-acid dehydrator filter
- Protections
  - High pressure pressostat
  - Low pressure pressostat
  - Automatic switch in the control circuit
  - Magnetothermic protection switches for the compressor and fan motor power line
  - Main door switch
  - Fan thermal protection
  - Compressor discharge temperature control
- Electric panel
  - Complete and fully wired electrical panel
  - Transformer for power supply without neutral
  - Main earth connection
  - Compressor and fan motors contactors

Options

- Installation
  - Switchable position of dischage and return of the indoor / outdoor circuit. This allows to leave the unit as most vonvenient in each installation. Please see the possible assembly types.
  - Shock absorbers made of rubber
- Outdoor ambient
  - INERA® coils (outdoor and indoor) with copper pipes and fins of an aluminium alloy, of high performance and great resistance to the corrosion
  - Coils (outdoor and indoor) with copper pipes and aluminium fins with polyurethane coating
  - Condensation pressure control with damper
- Comfort / heating
  - Electrical heaters support. With this option, the air flow controller is included.
- Indoor air quality
  - Indoor circuit: gravimetric filter G4
  - Indoor circuit: gravimetric filter G4 + creased opacimetric filter F7
- Acoustics
  - Compressor acoustic isolation
- Safety
  - Differential pressostat for dirty filters
  - Differential pressostat for control of air flow
- Electric panel
  - Power supply with neutral
- Control / Comunication
  - Optional for the CARRIERrtc basic electronic control:
    - pGD1 terminal to maintenance of the unit
    - Temperature probe of the return or ambient air connected to the control board that replaces the ambient probe of the TCO thermostat. This probe performs necessary for the anti-fire safety.
  - Connection to a centralised technical management system by using a especific BMS card for some of the communication protocols:
    - RS485 serial cards for network communication with protocols: Carel, Modbus, LonWorks®, BACnet™ MSTP, Konnex.
    - Ethernet pCO Web card for network communication with protocols: Modbus TCP/IP, BACnet™ Ethernet, TCP/IP, SNMP V1-2-3, FTP and HTTP.
  - Solutions of supervision: exists 3 different solutions according to the dimensions of the installation: pCO Web (only one unit), PlantWatchPRO3 (up to 30 units), PlantVisorPRO2 (up to 300 units).

16 available combinations for the air circulation

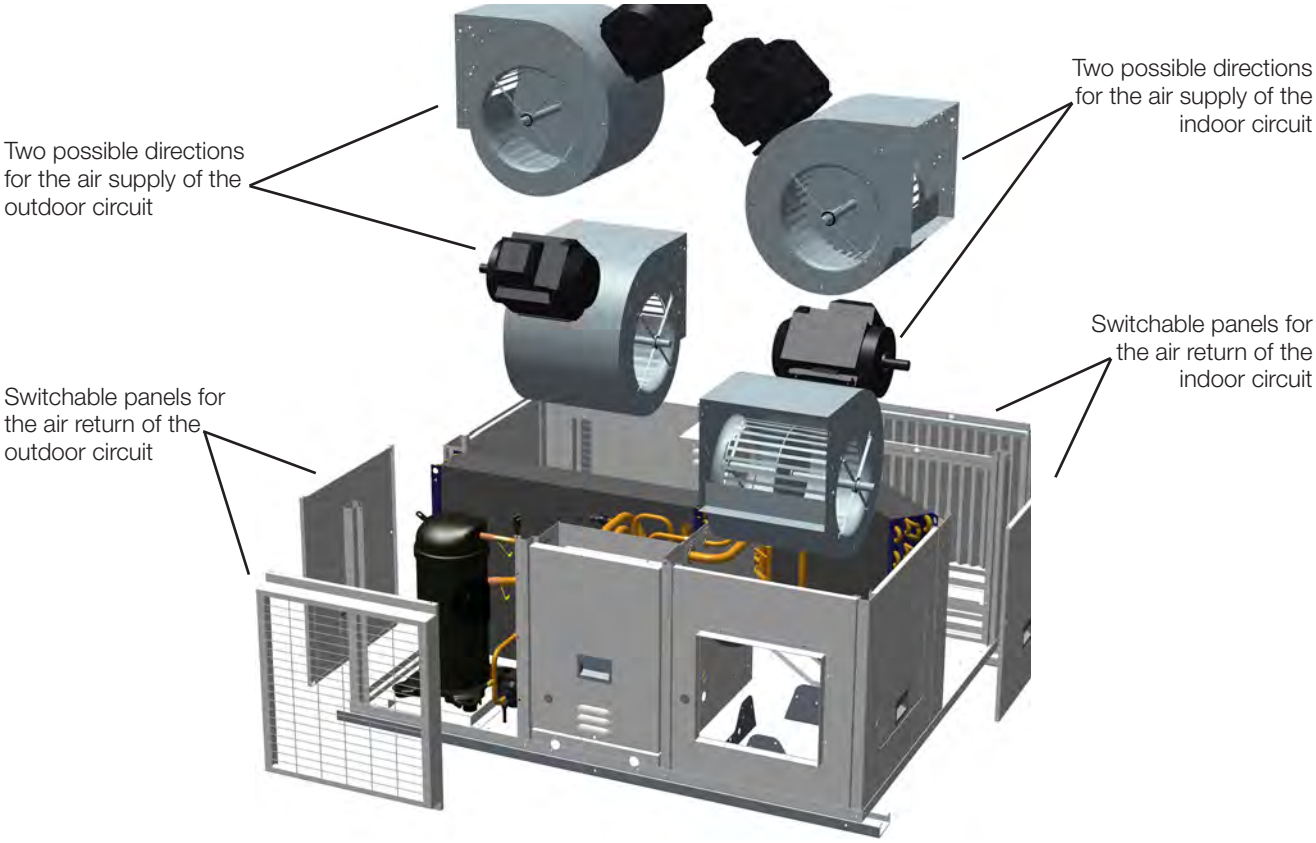

Possible assembly

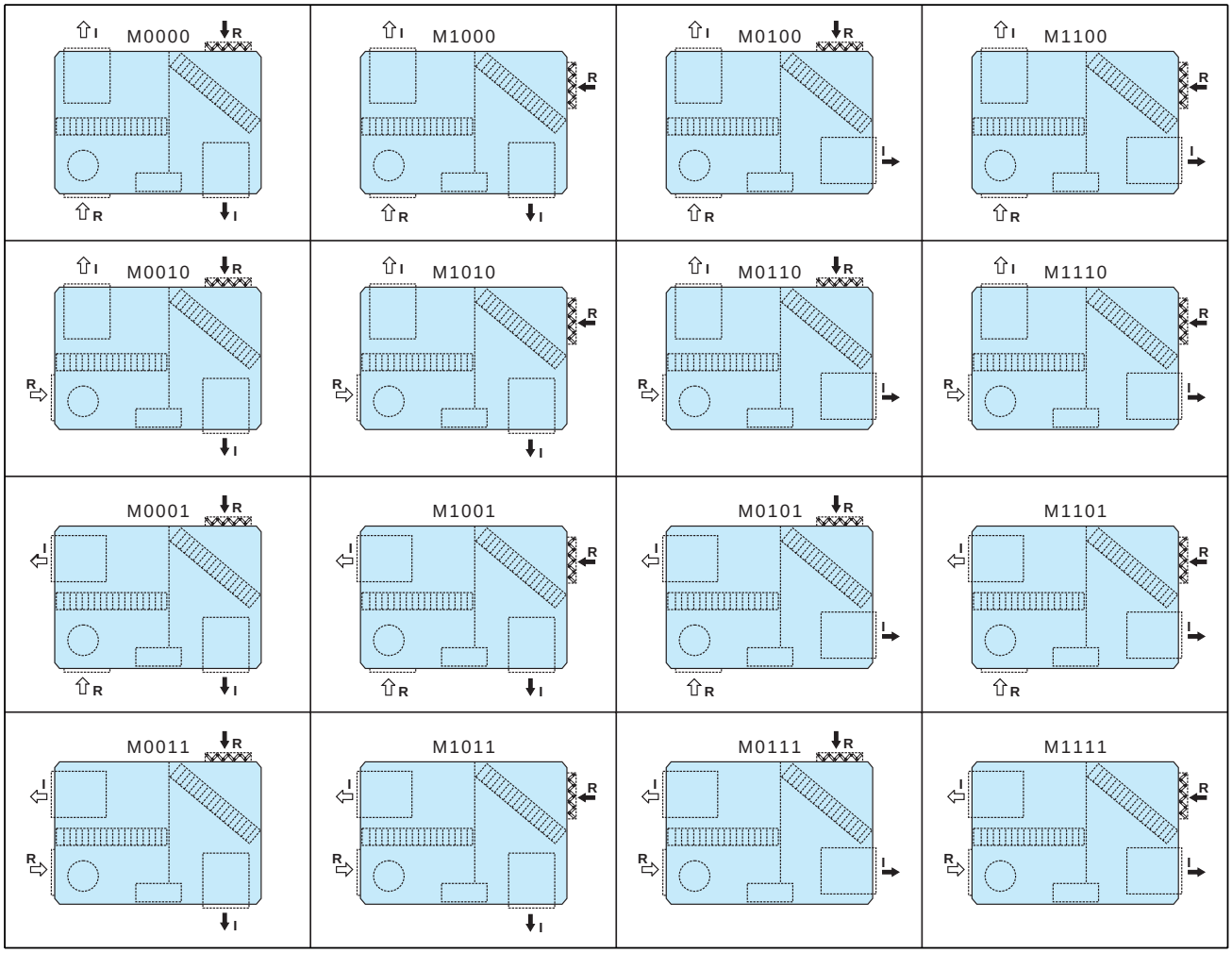

Air circulation

- I = Air supply outdoor circuit
- R = Air return outdoor circuit
- I = Air supply indoor circuit
- R = Air return indoor circuit

Denomination

Mwxyz

- Air return indoor circuit: 0 = Standard, 1 = Optional
- Air supply indoor circuit: 0 = Standard, 1 = Optional
- Air supply outdoor circuit: 0 = Standard, 1 = Optional
- Air return outdoor circuit: 0 = Standard, 1 = Optional

Denomination

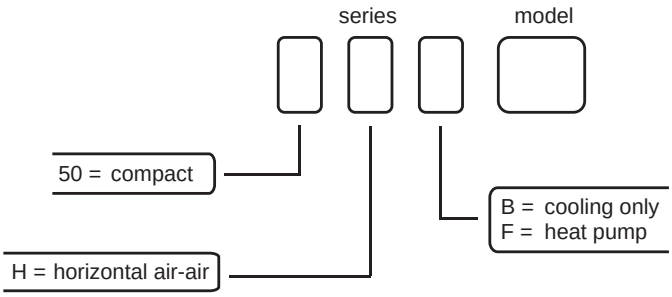

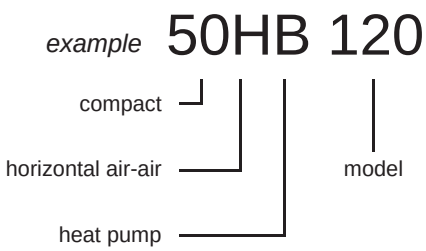

Controls

■ Electronic control CARRIERrtc basic

This control is basically comprised of a control board, a TCO user terminal, a graphic maintenance terminal pGD1 (optional) and sensors.

■ TCO user terminal

This terminal allows the configuration of the unit operating mode, the visualization of different temperatures of the installation, the view of alarms codes in the display and the timer programming.

This terminal has an ambient temperature probe by standard and optionally may be replaced by a return air probe connected in the control board.

■ PGD1 maintenance terminal (optional)

This terminal incorporates a LCD display and, by texts, facilitates the initial scheduling of the unit, the modification of the operating parameters and the description of the alarms produced.

■ Main functions

Selection of the operating mode: COOLING, HEATING, AUTOMATIC, FAN and DEHUMIDIFICATION.

- Modification of the setpoint
- Permanent control of the operating parameters
- View of the values measured by the probes
- Timing of the compressors
- Defrosting management (in heat pump units)
- Anti-fire safety
- Control of the outlet temperature
- Compressor discharge temperature control by probe
- Compensation of the setpoint in accordance with the outdoor temperature
- Timer and weekly programming
- Failure diagnosis and main alarm
- Counters of the number of starts and operating hours of the unit's components

■ Optional functions

- Control of the auxiliary electrical heaters
- Detection of clogged filters and management of air flow controller
- Connection to a centralised technical management system (BMS) for supervision using a BMS card especific for the communication protocols Carel, Modbus, LonWorks®, BACnet™ MSTP, Konnex, Modbus TCP/IP, BACnet™ Ethernet, TCP/IP, SNMP V1-2-3, FTP y HTTP.

Operating Limits

Inlet air conditions		Cooling	Heating
Indoor coil	**Minimum**	14 ºC WB	10 ºC
	Maximum	22 ºC WB	27 ºC
Outdoor coil	**Minimum**	12 ºC*	- 6 ºC WB **
	Maximum	48 ºC	15 ºC WB

* With control of the condensation pressure operating up to -10ºC.

** When the outdoor temperature is usually below 5ºC WB it is recommended installing a support element.

Dimensions schemes

50HB/HF - 55 and 65, M0000 assembly (mm)

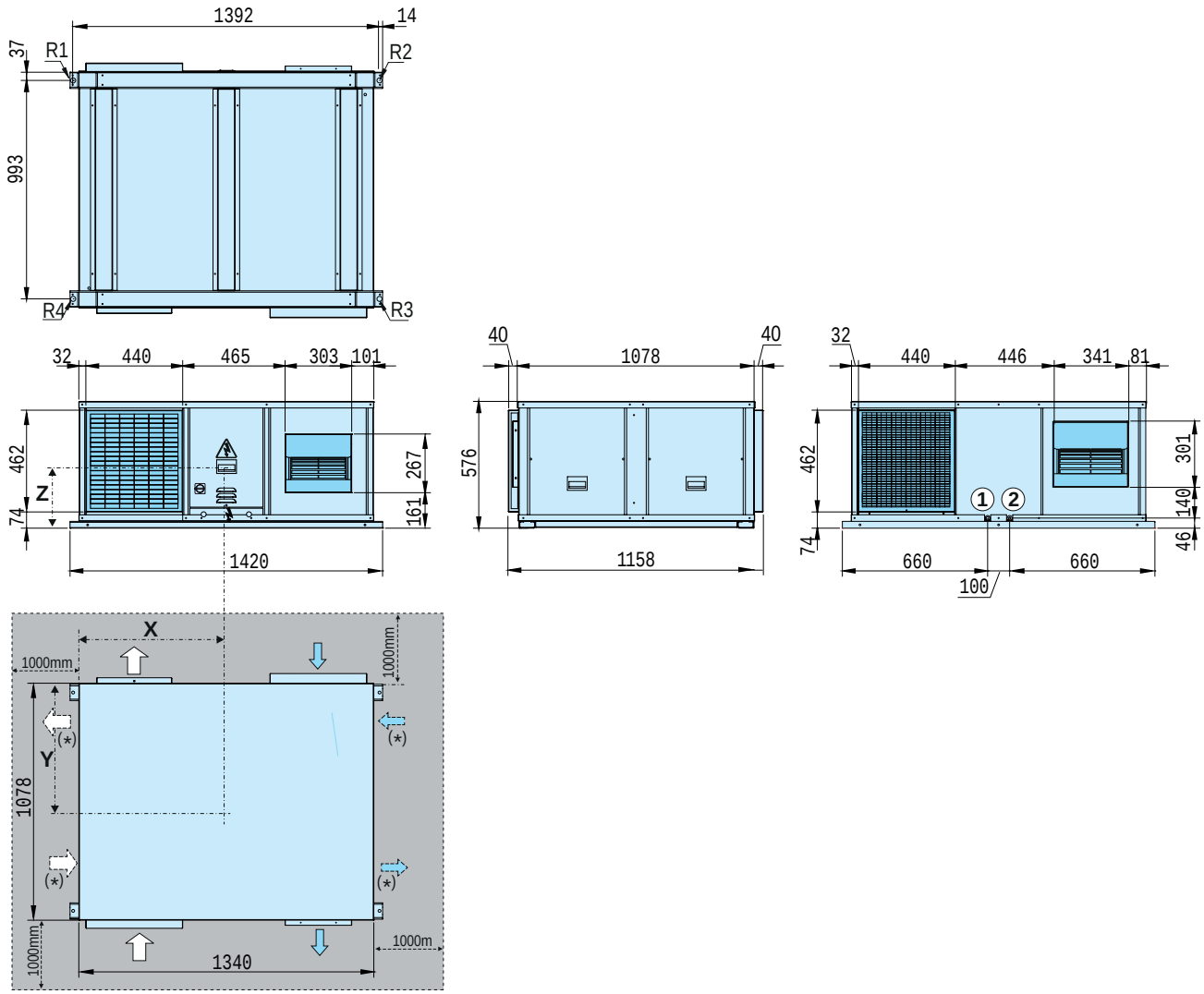

(*) Both in the indoor air circuit as well as the outdoor circuit, the supply and return panels can be located in any one of the two positions indicated in the following drawings, since both panels are easy interchangeable, with the goal to leave it finalized as most convenient in each installation.

50HB/HF	Centre of gravity (mm)			Reactions in the supports (kg)				
	X	Y	Z	Weight	R1	R2	R3	R4
55	591	611	266	245	78	58	45	65
65	585	617	268	253	81	59	45	67

Legend

- Outdoor air circulation
- Indoor air circulation
- Electric panel
- Power supply
- Door switch
- ① Condensate outlet indoor circuit ∅ 3/4" female thread
- ② Condensate outlet outdoor circuit ∅ 3/4" female thread

Antivibration anchoring: rivet nut M10

Note 1: supply intake profile: 25 mm

Note 2: the return frame of the indoor circuit, with filters G4+F7 as option, protrudes 50mm more

Clear space to be observed for maintenance operations and unit start-up

50HB/HF - 55 and 65, M1111 optional assembly (mm)

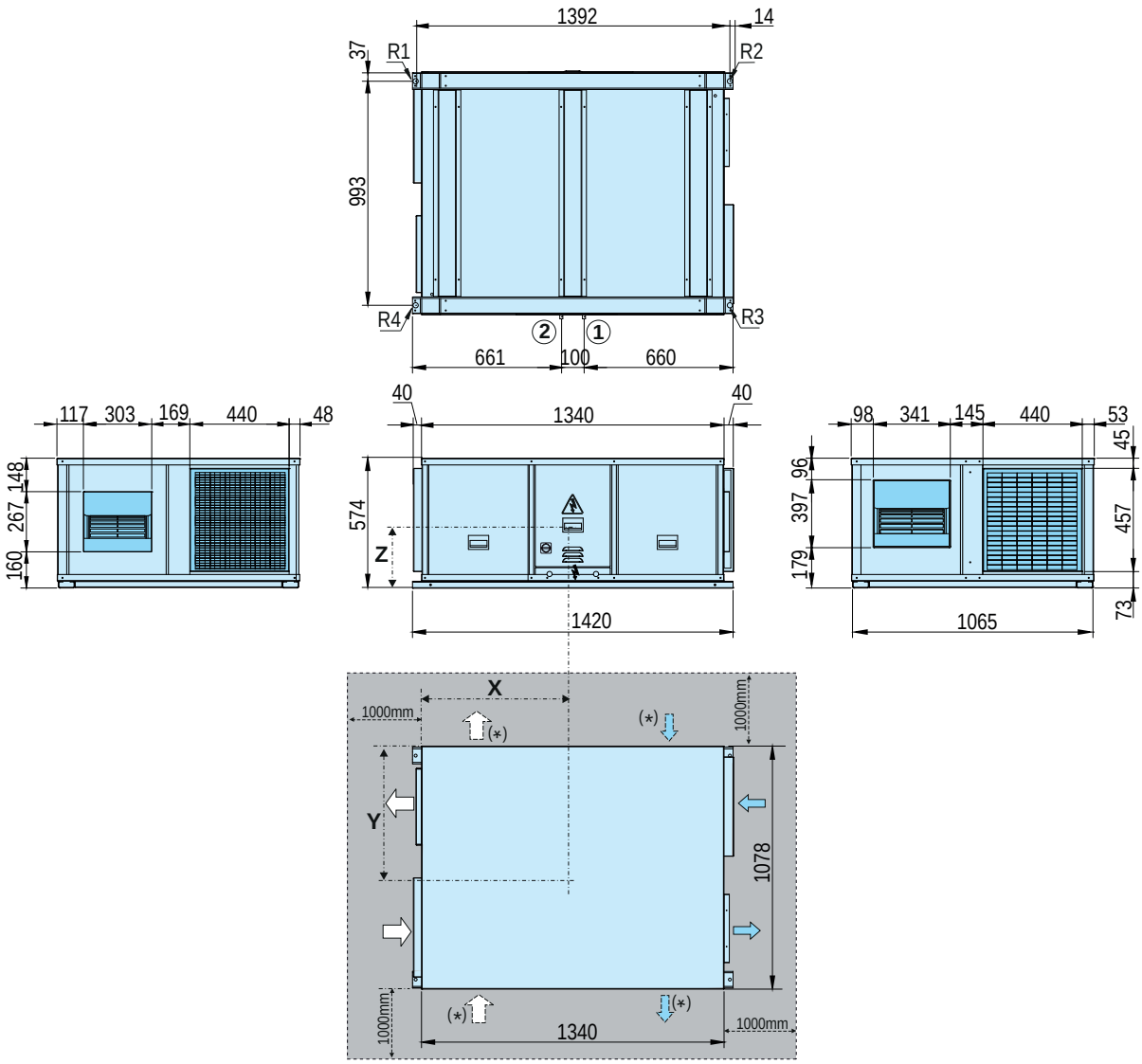

(*) Both in the indoor air circuit as well as the outdoor circuit, the supply and return panels can be located in any one of the two positions indicated in the following drawings, since both panels are easy interchangeable, with the goal to leave it finalized as most convenient in each installation.

50HB/HF	Centre of gravity (mm)			Reactions in the supports (kg)				
	X	Y	Z	Weight	R1	R2	R3	R4
55	609	609	266	245	76	59	47	64
65	603	615	268	253	79	61	47	65

Legend

- Outdoor air circulation
- Indoor air circulation
- Electric panel
- Power supply
- Door switch
- (1) Condensate outlet indoor circuit ∅ 3/4" female thread
- (2) Condensate outlet outdoor circuit ∅ 3/4" female thread

Antivibration anchoring: rivet nut M10

Note 1: supply intake profile: 25 mm

Note 2: the return frame of the indoor circuit, with filters G4+F7 as option, protrudes 50mm more

Clear space to be observed for maintenance operations and unit start-up

50HB/HF - 80 and 90, M0000 assembly (mm)

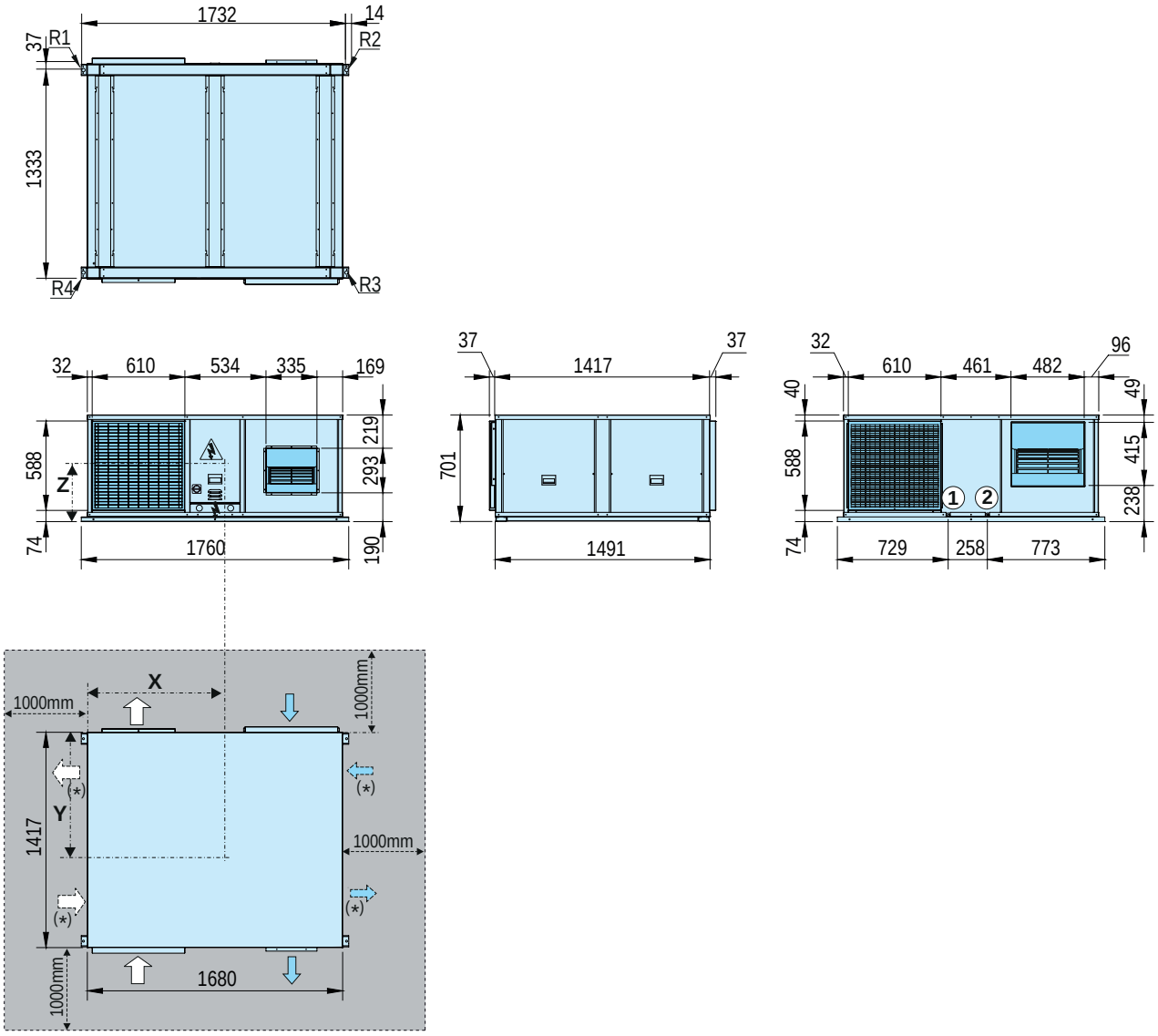

(*) Both in the indoor air circuit as well as the outdoor circuit, the supply and return panels can be located in any one of the two positions indicated in the following drawings, since both panels are easy interchangeable, with the goal to leave it finalized as most convenient in each installation.

50HB/HF	Centre of gravity (mm)			Reactions in the supports (kg)				
	X	Y	Z	Weight	R1	R2	R3	R4
80	755	746	308	332	96	75	70	91
90	764	769	307	375	110	88	77	99

Legend

- Outdoor air circulation
- Indoor air circulation
- Electric panel
- Power supply
- Door switch
- (1) Condensate outlet indoor circuit ∅ 3/4" female thread
- (2) Condensate outlet outdoor circuit ∅ 3/4" female thread

Antivibration anchoring: rivet nut M10

Note 1: supply intake profile: 25 mm

Note 2: the return frame of the indoor circuit, with filters G4+F7 as option, protrudes 50mm more

Clear space to be observed for maintenance operations and unit start-up

50HB/HF - 80 and 90, M1111 optional assembly (mm)

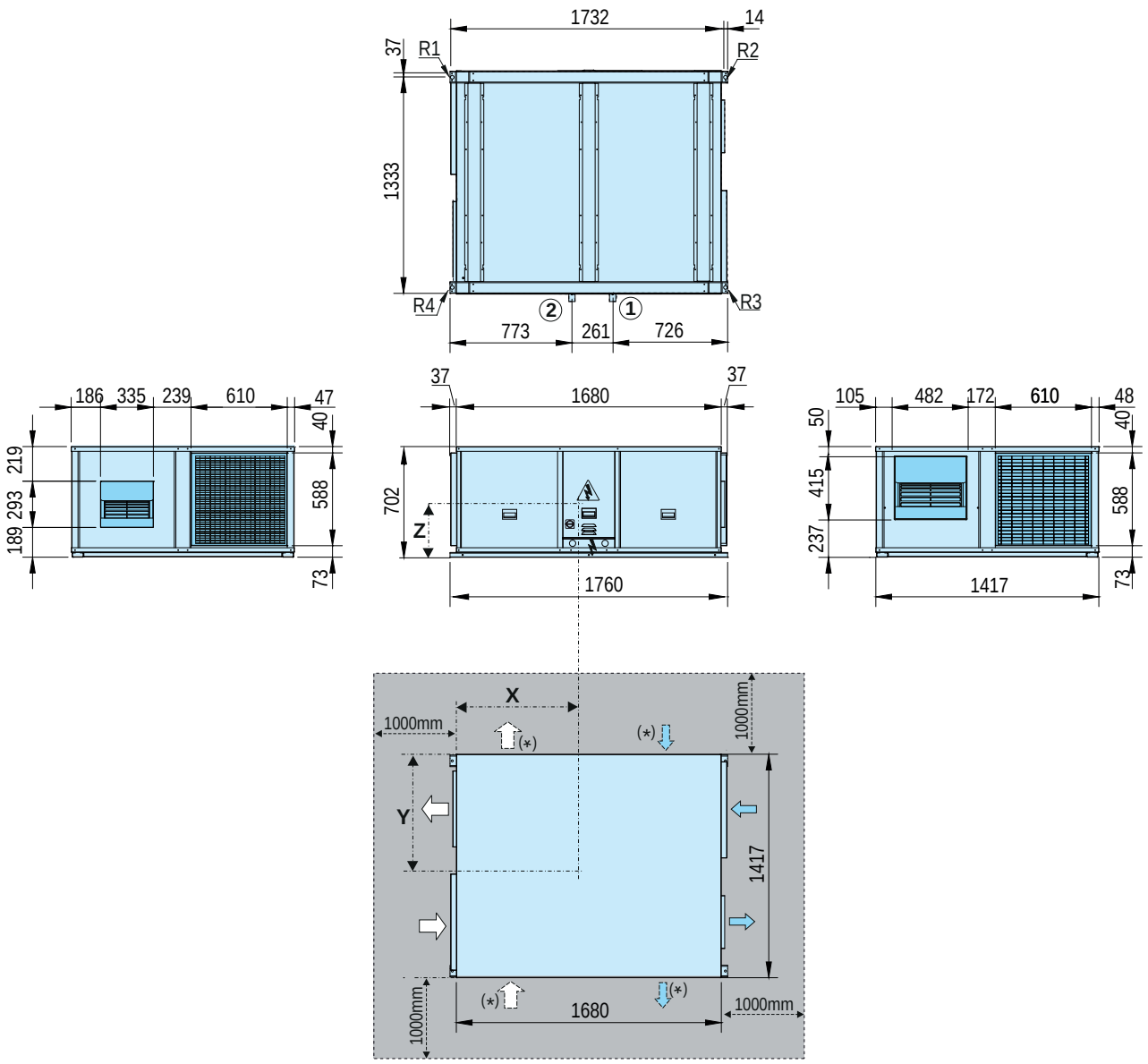

(*) Both in the indoor air circuit as well as the outdoor circuit, the supply and return panels can be located in any one of the two positions indicated in the following drawings, since both panels are easy interchangeable, with the goal to leave it finalized as most convenient in each installation.

50HB/HF	Centre of gravity (mm)			Reactions in the supports (kg)				
	X	Y	Z	Weight	R1	R2	R3	R4
80	775	743	308	332	94	76	72	89
90	744	766	307	375	112	86	76	101

Legend

- Outdoor air circulation
- Indoor air circulation
- Electric panel
- Power supply
- Door switch
- (1) Condensate outlet indoor circuit ∅ 3/4" female thread
- (2) Condensate outlet outdoor circuit ∅ 3/4" female thread

Antivibration anchoring: rivet nut M10

Note 1: supply intake profile: 25 mm

Note 2: the return frame of the indoor circuit, with filters G4+F7 as option, protrudes 50mm more

Clear space to be observed for maintenance operations and unit start-up

50HB/HF - 120 and 160, M0000 assembly (mm)

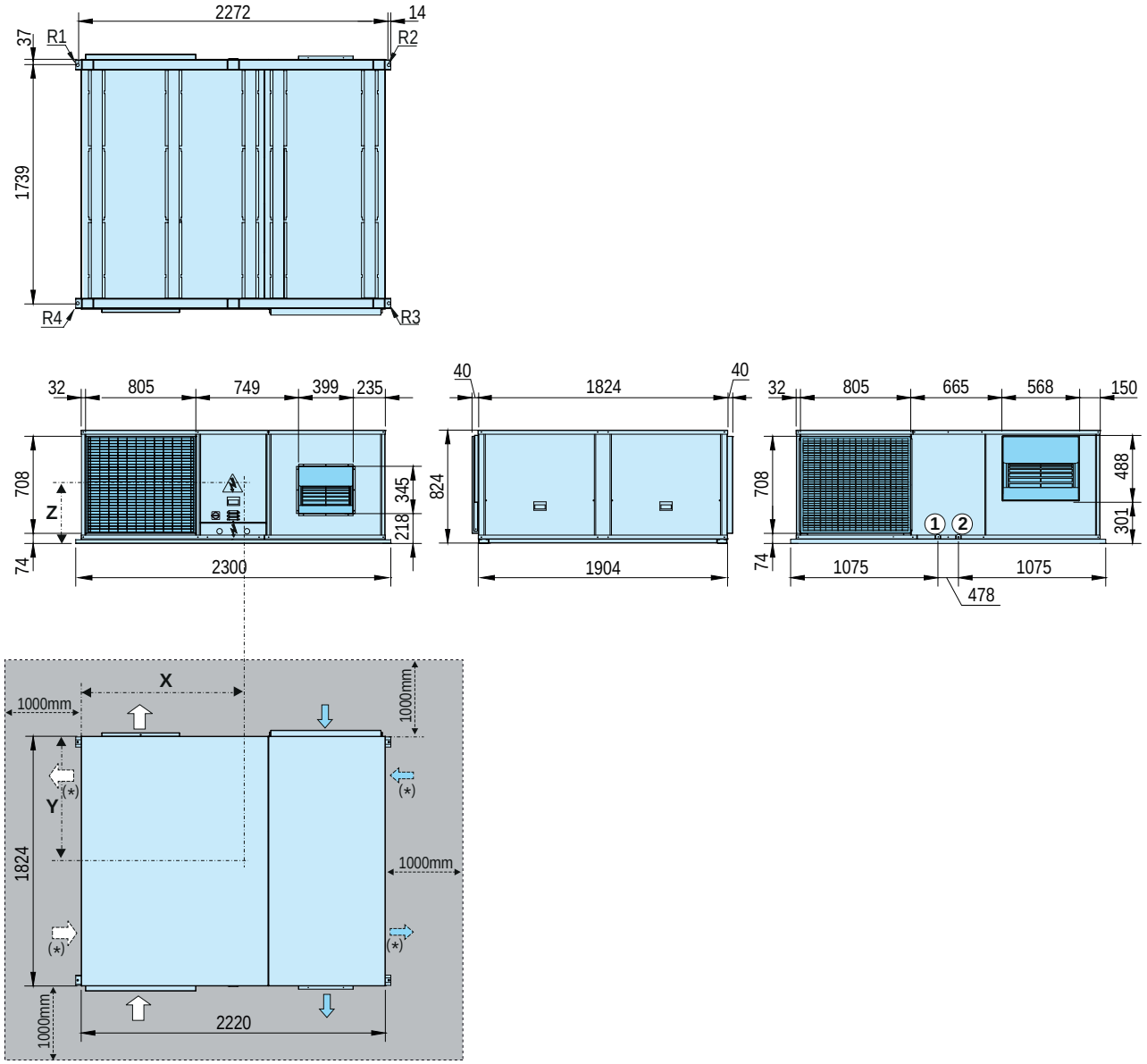

(*) Both in the indoor air circuit as well as the outdoor circuit, the supply and return panels can be located in any one of the two positions indicated in the following drawings, since both panels are easy interchangeable, with the goal to leave it finalized as most convenient in each installation.

50HB/HF	Centre of gravity (mm)			Reactions in the supports (kg)				
	X	Y	Z	Weight	R1	R2	R3	R4
120	1.104	917	340	472	125	113	112	122
160	1.096	921	343	521	139	126	122	135

Legend

- Outdoor air circulation
- Indoor air circulation
- Electric panel
- Power supply
- Door switch
- (1) Condensate outlet indoor circuit ∅ 3/4" female thread
- (2) Condensate outlet outdoor circuit ∅ 3/4" female thread

Antivibration anchoring: rivet nut M10

Note 1: supply intake profile: 25 mm

Note 2: the return frame of the indoor circuit, with filters G4+F7 as option, protrudes 50mm more

Clear space to be observed for maintenance operations and unit start-up

50HB/HF - 120 and 160, M1111 optional assembly (mm)

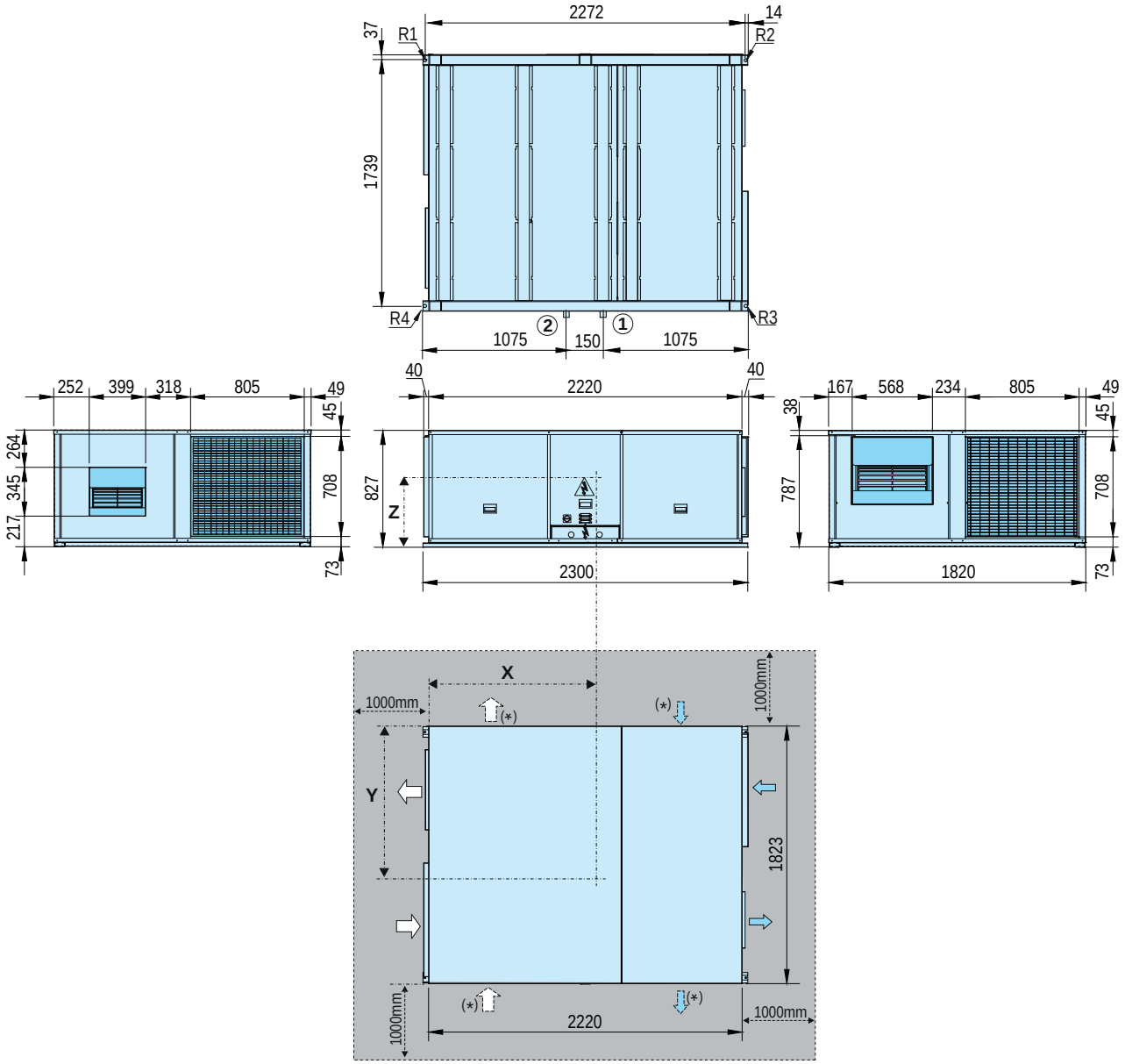

(*) Both in the indoor air circuit as well as the outdoor circuit, the supply and return panels can be located in any one of the two positions indicated in the following drawings, since both panels are easy interchangeable, with the goal to leave it finalized as most convenient in each installation.

50HB/HF	Centre of gravity (mm)			Reactions in the supports (kg)				
	X	Y	Z	Weight	R1	R2	R3	R4
120	1.106	906	340	472	123	113	113	123
160	1.097	910	343	521	137	124	124	137

Legend

- Outdoor air circulation
- Indoor air circulation
- Electric panel
- Power supply
- Door switch
- ① Condensate outlet indoor circuit ∅ 3/4" female thread
- ② Condensate outlet outdoor circuit ∅ 3/4" female thread

Antivibration anchoring: rivet nut M10

Note 1: supply intake profile: 25 mm

Note 2: the return frame of the indoor circuit, with filters G4+F7 as option, protrudes 50mm more

Clear space to be observed for maintenance operations and unit start-up

50NZ/NF

NEW

Nominal cooling capacity 18-70 kW
Nominal heating capacity 18-73 kW

Compact vertical

Reduced dimensions

Centrifugal fans

Ducted aspiration and discharge

The 50NZ/NF heat pumps and cooling unit are compacts air-to-air units, monobloc of vertical compact construction, designed to be installed indoors, safe from external damages, with access registers to fans, cooling circuit and electrical panel by means of easily removable panels.

These units are suitable for commercial and industrial applications where the availability of space allows its installation.

They offer the advantage of its vertical construction, and options which include elements of air renovation in only one unit.

All of the units are tested and checked in factory

50NZ series: Air-to-air cooling units of vertical compact construction.

50NF series: Reversible air-to-air heat pump units of vertical compact construction.

50NZ/NF series: 1 cooling circuit, 1 scroll compressor, 4 models: 80 / 90 / 120 / 160.

50NZ/NF series: 2 cooling circuits, 2 scroll compressors, 3 models: 180 / 240 / 320.

Physical data

50NZ/NF		80	90	120	160	180	240	320
Cooling								
Cooling capacity *	kW	17,9	19,3	26,8	34,8	38,6	53,6	69,6
Power input ***	kW	7,3	8,3	11,2	14,2	16,6	22,7	28,5
EER performance		2,5	2,3	2,4	2,5	2,3	2,4	2,4
Heating								
Heating capacity **	kW	18,4	20,2	27,8	36,5	40,4	55,6	73,0
Power input ***	kW	6,5	7,3	9,5	12,0	14,6	19,3	24,1
COP performance		2,8	2,8	2,9	3,0	2,8	2,9	3,0
Outdoor circuit fan								
Nominal air flow	m^3/h	6.500	7.000	10.000	12.200	14.000	20.000	24.400
Available static pressure	mm.w.c	7	7	13	14	7	13	14
Type		Centrifugal						
Number		1				2		
Motor output	kW	1,1	1,5	2,2	3,0	1,5	2,2	3,0
Speed	r.p.m.	630	680	699	644	680	699	644
Indoor circuit fan								
Nominal air flow	m^3/h	4.000	4.600	6.000	7.000	9.200	12.000	14.000
Available static pressure	mm.w.c	10	7	12	9	6	12	12
Type		Centrifugal						
Number		1						
Motor output	kW	0,75	0,75	1,1	1,5	1,5	3	3
Speed	r.p.m.	941	725	927	644	747	839	697
Compressor								
Type		Scroll						
Compressors number		1				2		
Circuits number		1				2		
Electrical characteristics								
Electrical power supply		400 V / III ph / 50 Hz (±10%)						
Power supply		3 wires + ground + neutral						
Maximum absorbed current								
Compressor	A	17	17	29	29	2 x 17	2 x 29	2 x 29
Outdoor fan	A	2,7	3,6	5,0	6,9	2 x 3,6	2 x 5	2 x 6,9
Control	A	2,1	2,1	2,7	3,6	3,6	6,9	6,9
Total	A	21,8	22,7	36,7	39,5	44,8	74,9	78,7
Refrigerant								
Type		R-407C						
Global warming potential (GWP) ****		1.744						
Charge	kg	4,0	5,0	6,4	7,3	10,0	13,0	15,0
Environment impact	tCO2eq	7,0	8,7	11,2	12,7	17,4	22,7	26,2
Dimensions								
Length	mm	1.174	1.174	1.440	1.440	2.161	2.704	2.704
Width	mm	885	885	934	934	885	934	934
Height	mm	1.840	1.840	2.015	2.015	1.840	2.015	2.015
Weight								
NZ	kg	395	402	485	538	725	930	1.048
NF	kg	410	417	504	558	755	956	1.088
Condensate evacuation		3/4"						

* Cooling capacity given for indoor temperature conditions 27ºC, 50% RH and 35ºC outdoor temperature.
** Heating capacity given for indoor temperature conditions 20ºC and 6ºC WB outdoor temperature.
*** Total power input by compressor and motorised fans under nominal conditions.
**** Climatic warming potential of a kilogram of fluorinated greenhouse gas in relation to a kilogram of carbon dioxide over a period of 100 years.

Controls

CARRIERrtc basic / medium electronic control

- CARRIERrtc basic version: models 80 to 160
- CARRIERrtc medium version: models 180 to 320

This control is basically comprised of a control board, a TCO user terminal, a graphic terminal pGD1 (optional) and sensors.

The pGD1 maintenance terminal (optional) facilitates the initial scheduling of the unit, the modification of the operating parameters and the description of the alarms produced. This terminal can be installed on the electric panel, instead of TCO terminal, or with remote connection.

TCO user terminal

pGD1 maintenance terminal

Main functions:

- Selection of the operating mode: COOLING, HEATING, AUTOMATIC, FAN and DEHUMIDIFICATION.
- Modification of the setpoint.
- Permanent control of the operating parameters.
- View of the values measured by the probes.
- Timing of the compressors.
- Defrosting management (in heat pump units), with possibility of intelligent defrosting.
- Anti-fire safety.
- Control of the outlet temperature.
- Compressor discharge temperature control by probe.
- Compensation of the setpoint in accordance with the outdoor temperature.
- Timer and weekly programming.
- Failure diagnosis and main alarm.
- Counters of the number of starts and operating hours of the unit's components.

Optional functions:

- Humidity control.
- Management of thermal free-cooling (with CARRIERrtc basic & medium versions).
- Management of enthalpic or thermoenthalpic free-cooling (only with CARRIERrtc medium version).
- Control of the minimum opening of the outdoor air damper.
- Control of the auxiliary electrical heaters.
- Proportional control of a hot water auxiliary coil.
- Detection of clogged filters and management of air flow controller.
- Connection to a centralised technical management system (BMS) for supervision.

Options

- Outdoor environment
  - Copper tube and copper fins coil, or aluminum polyurethane-coated fins.
  - Condensation pressure control with damper.
- Confort / heating
  - Electrical heaters support. With this option, the air flow controller is included.
  - Hot water support coil. With this optional the thermostat anti-frost is obligatory as safety system, in case of exterior assembly or with free-cooling, if the unit works with low outdoor temperatures.
- Acoustic
  - Compressor acoustic isolation.
- Safety
  - Differential pressostat for the detection of clogged filters.
  - Differential pressostat for control of air flow.
  - Smoke detecting station.
  - Air quality probe for installation in the environment to enable measuring CO_2 and/or volatile compounds.
- Installation
  - Switchable supply and return position of the indoor circuit.
  - Asemblies with mixing box and free-cooling (see enclosed diagram).
  - Antivibration mounts made of rubber.
- Control / communication
  - Change to CARRIERrtc medium version (models 80 to 160).
  - Options of the CARRIERrtc basic & medium control.
- Asemblies with mixing box and free-cooling
  - 2 dampers (motorised): outdoor air intake with damper, interlocked with return damper.
  - 3 dampers (motorised): centrifugal return fan.

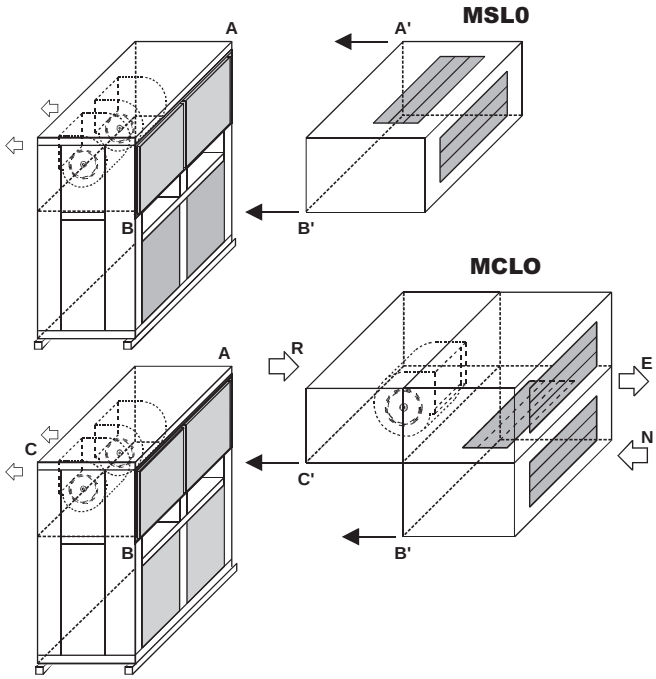

Air circulation		
R	=	Return
E	=	Extraction
N	=	New inlet

Denomination

Mwxy

- S = Simple (2 dampers) / C = Centrifugal return fan
- 0 = Standard / L = Flow in "L"

Different assemblies

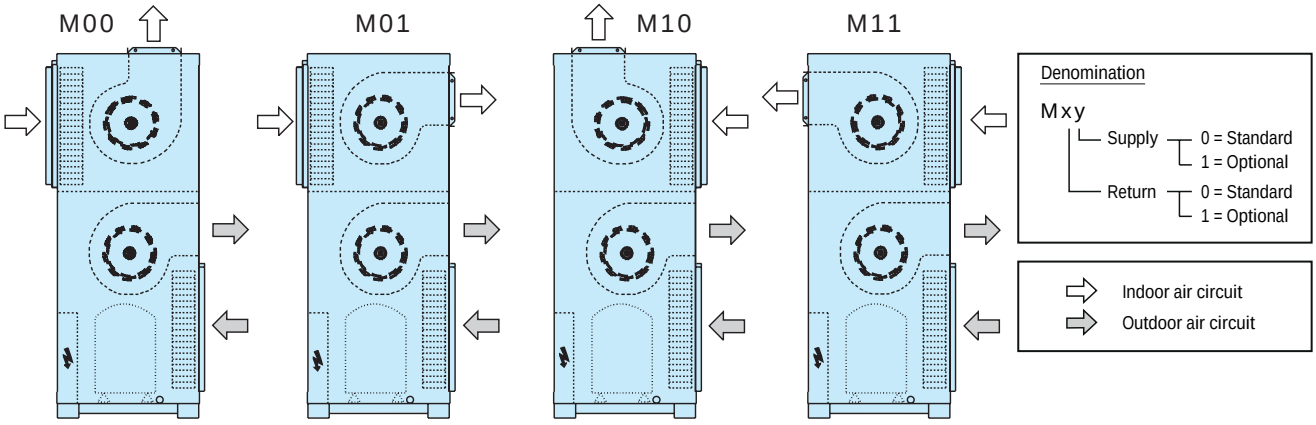

Denomination

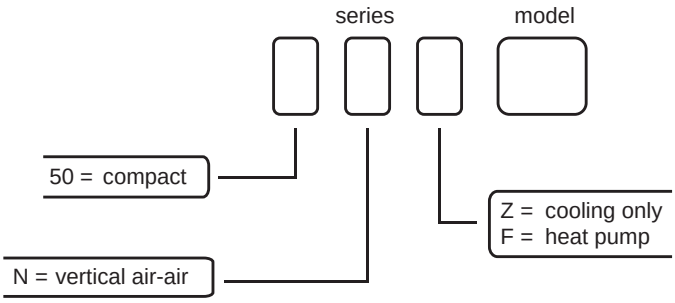

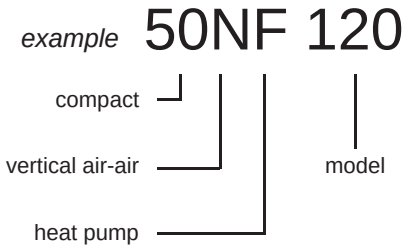

Unit configuration

- Casing
  - Casing made of galvanised steel metal with polyester paint dried to the furnace and thermal insulation. Self-supporting frame.
- Outdoor circuit
  - Centrifugal fan(s) with coupling by pulleys and belts. Electric motor(s) with tensioner, class F, IP55 and internal thermal protection. Turbines with an impeller of front-curved blades. Greased spherical bearings, with no maintenance required. Optionally, high available pressure.
  - Protection grille(s) of the fan supply outlet(s).
  - Condensates drain pan.
  - Copper pipe and aluminium fins coil.
- Indoor circuit
  - Centrifugal fan with coupling by pulleys and belts. Electric motor with tensioner, class F, IP55 and internal thermal protection. Turbines with an impeller of front-curved blades. Greased spherical bearings, with no maintenance required. Optionally, high available pressure.
  - Reusable air filter.
  - Condensates drain pan.
  - Copper pipe and aluminium fins coil.
- Cooling circuit
  - Scroll compressor(s) assembled over shock absorbers. Thermal protection.
  - Thermostatic expansion valve with outdoor pressure external equalisation.
  - Anti-acid dehydrator filter.
  - Four-way valve for cycle inversion (50NF series).
  - Crankcase heater.
- Protections
  - High and low pressure pressostats.
  - Compressor discharge temperature control.
  - Main door switch.
  - Automatic switch in the control circuit.
  - Magnetothermic protection switches for the compressor(s) and fan(s) motor power line.
  - Fan thermal protection.
- Electric panel
  - Complete and fully wired electrical panel.
  - Main earth connection.
  - Compressor(s) and fan motor contactors.

Operating limits

Inlet air conditions		Cooling	Heating
Indoor coil	Minimum	14ºC WB	10ºC
	Maximum	21ºC WB	27ºC
Outdoor coil	Minimum	12ºC *	-7ºC WB **
	Maximum	43ºC	15ºC WB

* With control of the condensation pressure operating up to -10ºC.

** When the outdoor temperature is usually below 5ºC WB it is recommended installing a support element.

Dimensions schemes

50NZ/NF - 80 / 90, assembly M00 (mm)

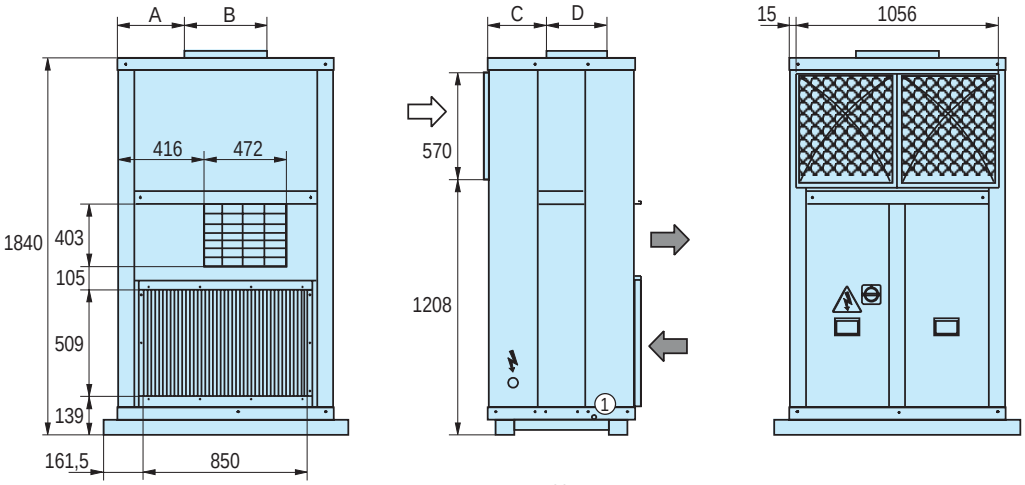

Model	A	B	C	D
80	345.5	337	335.5	295
90	342.5	401	349.5	347

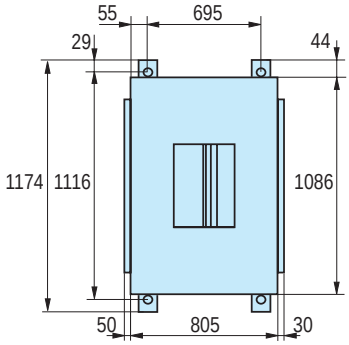

LEGEND

- Outdoor air circuit
- Indoor air circuit
- Electric panel
- Power supply
- Door switch
- ① Condensate outlet ∅ 3/4"

Antivibration anchoring: Ø18mm holes

50NZ/NF - 80 / 90, assembly M01 (mm)

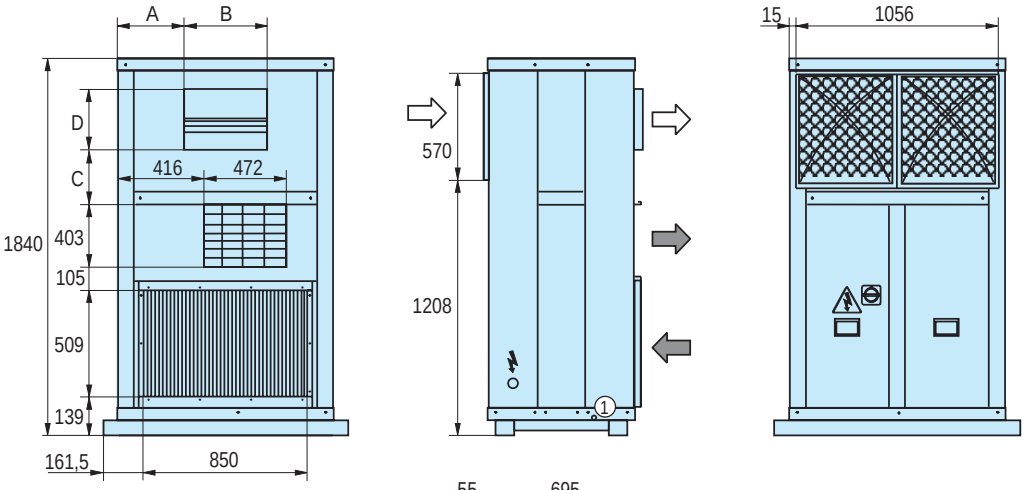

Model	A	B	C	D
80	374.5	337	162	295
90	342.5	401	188	347

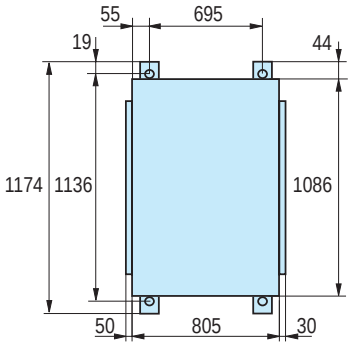

LEGEND

- Outdoor air circuit
- Indoor air circuit
- Electric panel
- Power supply
- Door switch
- ① Condensate outlet ∅ 3/4"

Antivibration anchoring: Ø18mm holes

50NZ/NF - 120 / 160, assembly M00 (mm)

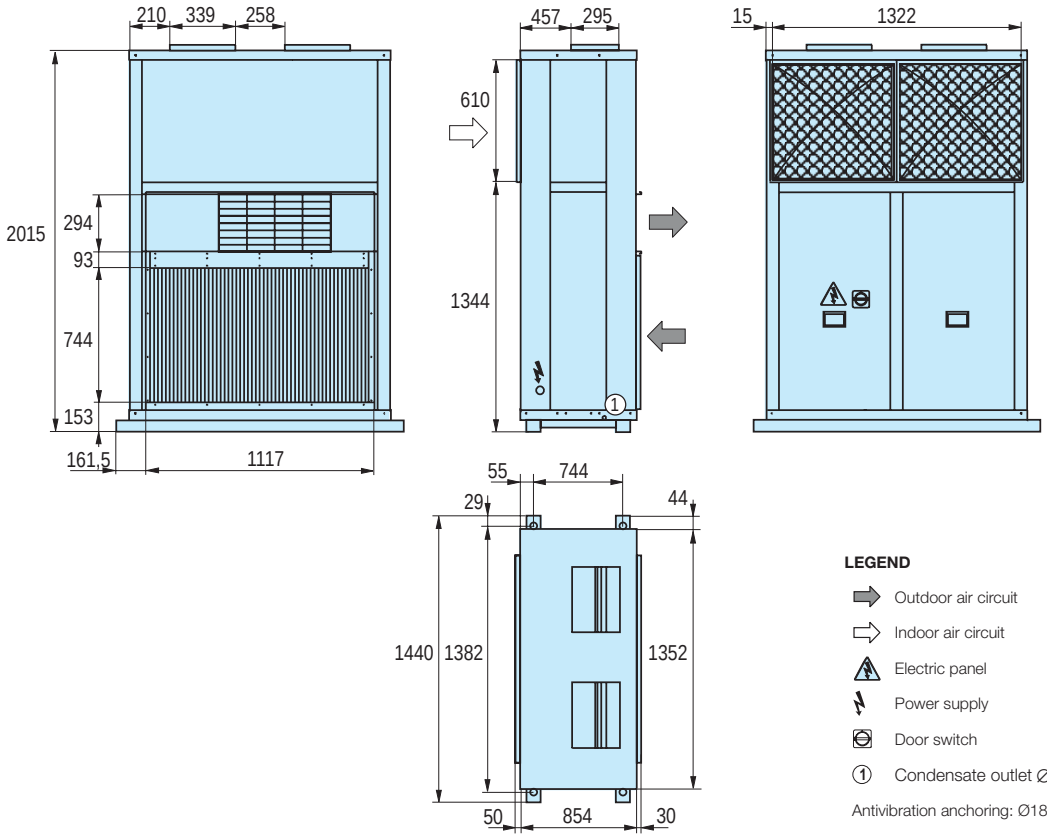

50NZ/NF - 120 / 160, assembly M01 (mm)

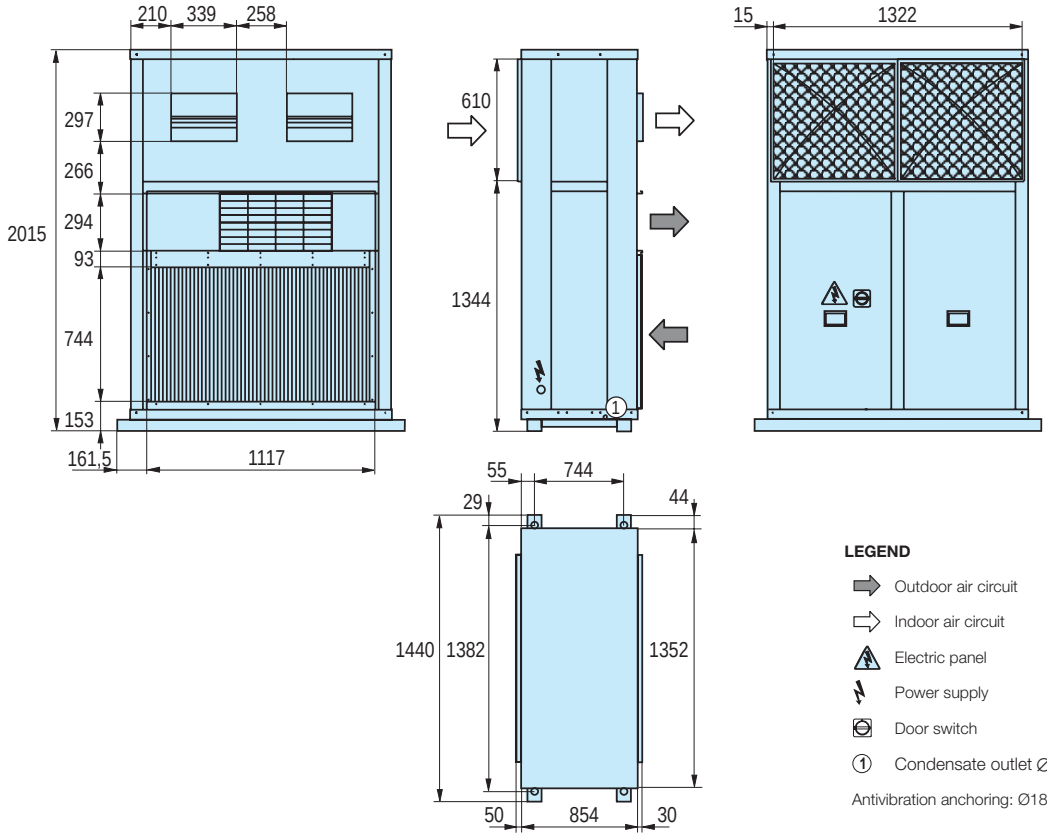

50NZ/NF - 180, assembly M00 (mm)

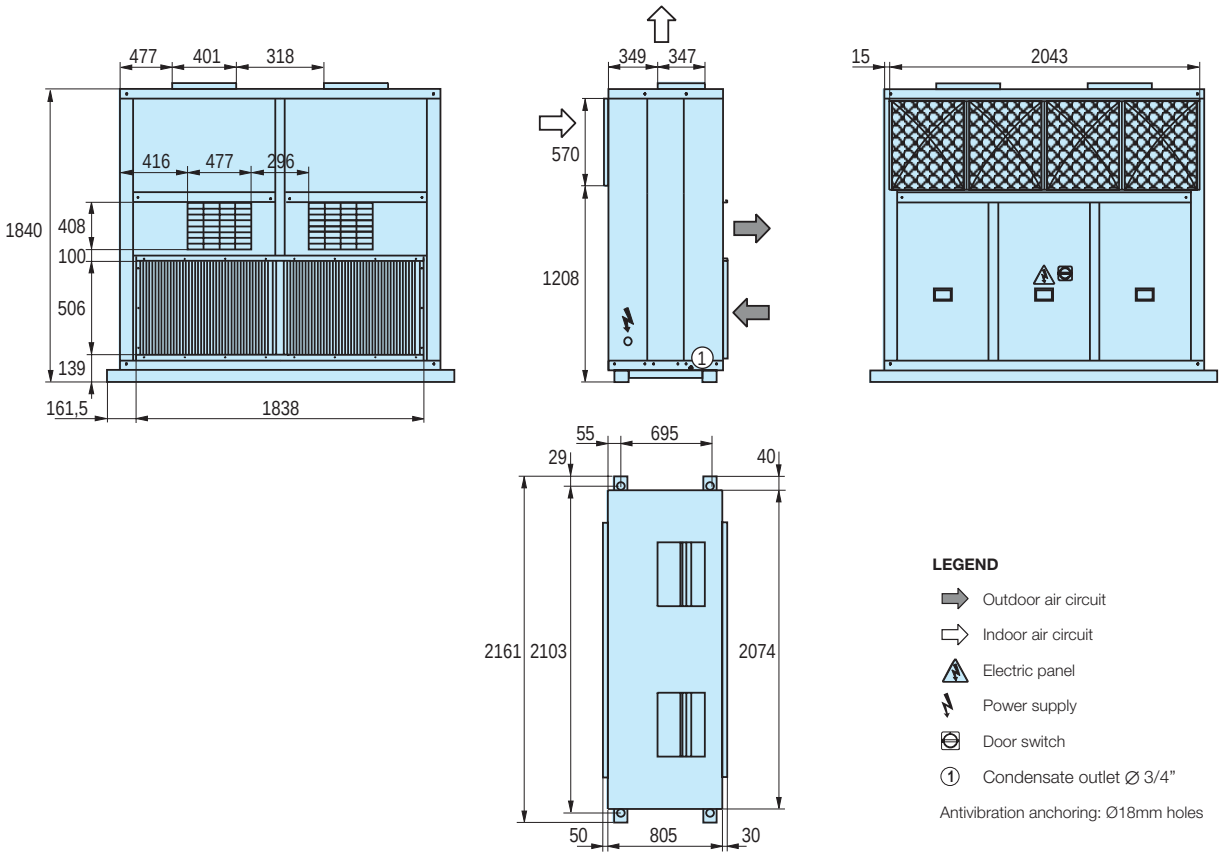

LEGEND

- Outdoor air circuit
- Indoor air circuit
- Electric panel
- Power supply
- Door switch
- ① Condensate outlet Ø 3/4”

Antivibration anchoring: Ø18mm holes

50NZ/NF - 180, assembly M01 (mm)

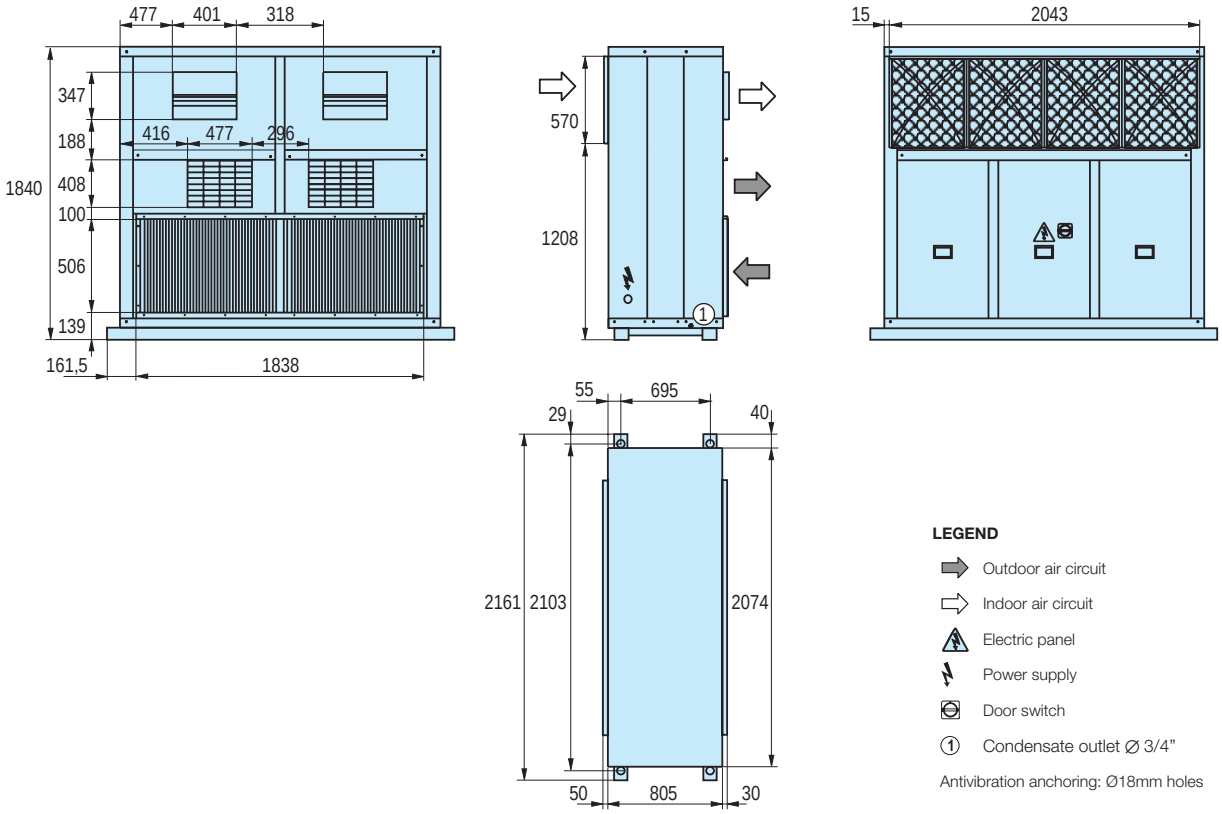

LEGEND

- Outdoor air circuit
- Indoor air circuit
- Electric panel
- Power supply
- Door switch
- ① Condensate outlet Ø 3/4”

Antivibration anchoring: Ø18mm holes

50NZ/NF - 240 / 320, assembly M00 (mm)

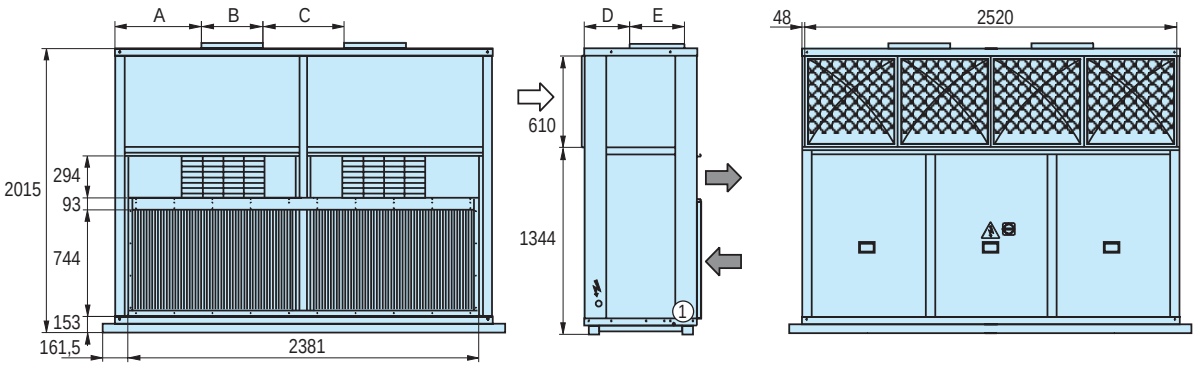

Model	A	B	C	D	E
240	756	401	318	360	347
320	650	477	378	371	410

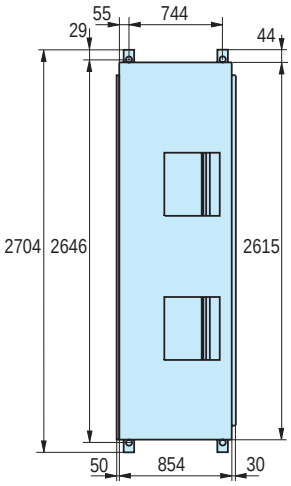

LEGEND

- Outdoor air circuit
- Indoor air circuit
- Electric panel
- Power supply
- Door switch
- (1) Condensate outlet ∅ 3/4”

Antivibration anchoring: Ø18mm holes

50NZ/NF - 240 / 320, assembly M01 (mm)

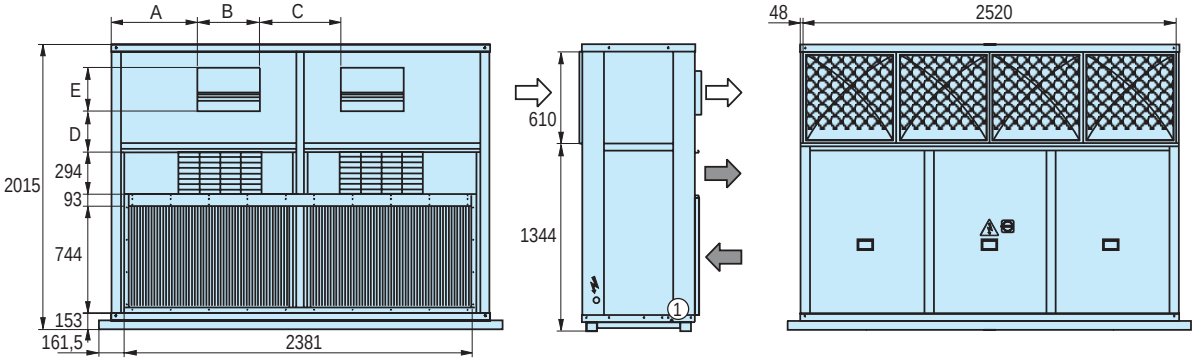

Model	A	B	C	D	E
240	756	401	318	190	347
320	650	477	378	215	410

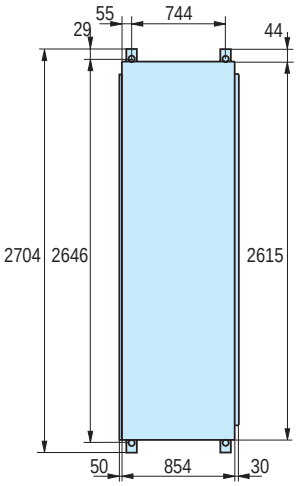

LEGEND

- Outdoor air circuit
- Indoor air circuit
- Electric panel
- Power supply
- Door switch
- (1) Condensate outlet ∅ 3/4”

Antivibration anchoring: Ø18mm holes

38HB/HF
40HB/HF

NEW

Split-system

R-410A refrigerant

Topology suited for installations in which the aesthetics of the building are respected

Configuration flexibility

The 38HB/HF cooling units and heat pumps are units which feature a split-system construction with components optimised for the R-410A refrigerant.

They are presented in two different elements:

- An outdoor unit (38HB/HF series) which features a horizontal construction and is equipped with a centrifugal fan, a hermetic scroll-type compressor and an electric panel with electronic control. Supply and return air on the same side.
- An indoor unit or or air-conditioning unit (40HB/HF series) which features a horizontal construction and has supply and return air on the same side.

Series

■ Outdoor unit

38HB series: Outdoor unit cooling-only air-condensed with centrifugal fan, horizontal design, designed for installation indoors.

38HF series: Outdoor unit heat pump air-air reversible with centrifugal fan and expansion valve, horizontal construction, designed for indoor installation.

■ Indoor unit

40HB series: Indoor unit cooling only with centrifugal fan and expansion valve, horizontal construction, designed for installation on premises connected to a network of ducts.

40HF series: Indoor unit heat pump reversible with centrifugal fan and expansion valve, horizontal construction, designed for installation on premises connected to a network of ducts.

Range

■ Outdoor unit 38HB/HF: 1 cooling circuit, 4 models: 80 / 90 / 120 / 160

■ Indoor unit 40HB/HF: 1 cooling circuit, 4 models: 80 / 90 / 120 / 160

Physical Data

38HB/HF		80	90	120	160
Cooling					
Cooling capacity (1)	kW	19,3	21,2	27,3	36,9
Power input (3)	kW	8,0	9,6	11,5	14,2
EER performance		2,40	2,20	2,38	2,60
Heating					
Heating capacity (2)	kW	22,3	24,2	32,0	41,9
Power input (3)	kW	7,7	9,1	10,6	13,5
COP performance		2,88	2,67	3,03	3,11
Outdoor circuit centrifugal fan					
Nominal air flow	m^3/h	6.500	7.000	10.000	12.200
Available static pressure	mm.w.c	25	20	20	20
Number / turbines		1 / 1			
Motor output	kW	3	3	4	5,5
Power input	kW	2,33	2,71	2,51	3,18
Speed	r.p.m.	1.489	1.522	940	836
Compressor					
Type		Scroll			
No. compressors / circuits / stages		1 / 1			
Oil type		Copeland 3MAF 32 cST, Danfoss POE 160 SZ, ICI Emkarate RL32 CF, Mobil EAL Artic 22 CC			
Volume of oil	l	1,6	3,0	3,3	3,3
Cooling connections					
Liquid line		1/2"	1/2"	5/8"	5/8"
Gas line		7/8"	7/8"	1 1/8"	1 1/8"
Refrigerant					
Type		R-410A			
Global warming potential (4)	GWP	2.088			
Load up to 7,5 m	kg	6,5	6,6	7,8	10,2
Environment impact	tCO_2 e	13,6	13,8	16,3	21,3
Electrical features					
Mains voltage		400 V / III ph / 50 Hz (±10%)			
Power supply		3 Wires + GND			
Maximum absorbed current					
Compressor	A	15,9	15,3	20,1	25,1
Fan	A	6,9	6,9	9,0	11,6
Control	A	0,9	0,9	0,9	0,9
Total	A	23,7	23,1	30,0	37,6
Dimensions					
Length	mm	1.680	1.680	2.088	2.088
Width	mm	915	915	1.198	1.198
Height	mm	670	670	810	810
Weight	kg	224	245	322	344

(1) Cooling capacity calculated in accordance with the EN-14511-2013 standard given for indoor temperature conditions 27ºC (19ºC WB) and 35ºC outdoor temperature.
(2) Heating capacity calculated in accordance with the EN-14511-2013 standard given for indoor temperature conditions 20ºC and 6ºC WB outdoor temperature.
(3) Total power input by compressors and motorised fans under nominal conditions, calculated in accordance with the EN-14511-2013 standard.
(4) Climatic warming potential of a kilogram of fl uorinated greenhouse gas in relation to a kilogram of carbon dioxide over a period of 100 years.

Physical Data

40HB/HF		80	90	120	160
Indoor circuit centrifugal fan					
Nominal air flow	m^3/h	4.000	4.600	6.000	7.000
Available static pressure	mm.w.c	20	20	20	20
Number / turbines		1 / 1			
Motor output	kW	1,5	2,2	2,2	2,2
Power input	kW	1,07	1,48	1,56	1,62
Speed	r.p.m.	1.497	1.613	1.219	1.030
Max. abs.current					
Fan	A	3,6	5,0	5,0	5,0
Dimensions					
Length	mm	1.500	1.500	1.831	1.831
Width	mm	870	870	1.103	1.103
Height	mm	639	639	706	706
Weight	kg	125	128	171	181

Additional load of R-410A refrigerant

Aditional load per linear metre of piping for equivalent maximum lengths exceeding 7 metres:

Nominal diameter	**inches**	1/4”	3/8”	1/2”	5/8”	3/4”	7/8”	1”	1 1/8”
Interior section	**cm^2**	0,149	0,444	0,900	1,505	2,282	3,120	4,290	5,346
Liquid line charge	**g/m**	19,3	57,0	115,0	193,5	292,3	404,1	550,3	685,7
Gas line charge	**g/m**	-	0,2	0,4	0,7	1,0	1,4	2,0	2,5

Power level and sound pressure level dB(A)

A) The sound power level in the outdoor unit fan supply to be taken into account for the silencer operation:

38HB/HF	80	90	120	160
dB(A)	79.1	81.5	79.2	83.9

B) The sound pressure level of the outdoor unit, measured at a distance of 5 metres, in open fi eld, directivity at 2 and 1.5 m from the ground, is:

38HB/HF	80	90	120	160
dB(A)	65.0	68.4	68.5	69.7

C) The sound pressure level of the indoor unit, with the ducted supply and discharge connections, measured at a distance of 5 metres, in open fi eld, directivity at 2 and 1.5 metres from the ground, is:

40HB/HF	80	90	120	160
dB(A)	65.9	64.6	65.2	64.2

Note: The sound pressure level depends on the installation conditions and, as such, is only indicated as a guide.

Optional for electronic controls

■ CARRIERrtc basic control

- pGD1 terminal for maintenance of the unit.
- Kit remote control to 200 meters with pGD1 terminal (pGD1 terminal + 2 TCONN bypass cards).

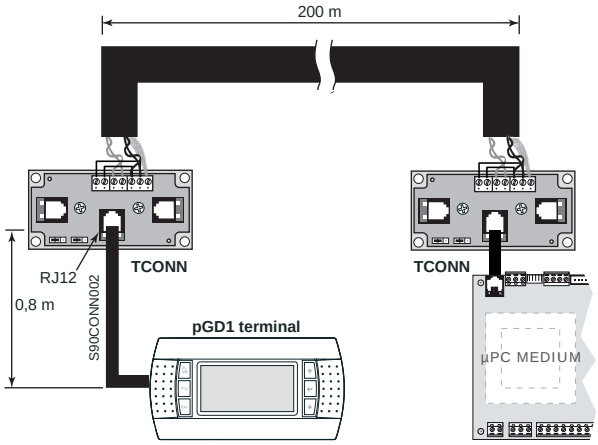

- Return or ambient temperature probe connected to the board that replaces the ambient probe of the thermostat TCO. This probe is required for anti-fire safety.

■ Communication

CARRIERrtc basic control allow the connection to a centralised technical management system by using a specific BMS card for some of the following communication protocols:

- RS485 serial cards for network communication with protocols: Carel, Modbus, LonWorks®, BACnet™ MSTP, Konnex.

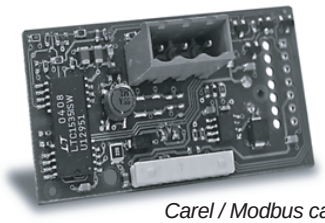

Carel / Modbus card

- Ethernet pCO Web card for network communication with protocols: Modbus TCP/IP, BACnet™ Ethernet, TCP/IP, SNMP V1-2-3, FTP and HTTP.

■ Supervision solutions

Different solutions of supervision are available according to the dimensions of the installation.

- **pCO Web**

It is the solution for the management and supervision of a single unit if it incorporates the Ethernet pCO Web card.

- **PlantWatchPRO3**

It is a solution designed for the monitoring of installations of medium - small dimensions, with ability to manage up to 30 units. Suitable for technical environments, it has no parts in movement. It's available in two versions: panel and wall.

Includes: 7 " touch display, buzzer for notifi cations, 1 USB port and 1 SD card slot for downloading reports, charge devices models and applying service packs.

In this case, each unit needs one RS485 Carel / Modbus board.

- **PlantVisorPRO2**

This is the solution for the management and supervision of air-conditioning installations with up to 300 units. It performs advanced monitoring and maintenance functions and enables creating areas and groups which simplify the management of the installation. It also allows the integration of energy meters for monitoring the power consumption of the installation.

PlantVisorPRO2 is available in two versions:

- **Box:** comprised of the CPU unit and, optionally, by monitor and keyboard.
- **Touch:** this includes the CPU and the touchscreen in the one device.

In this case, each unit needs one RS485 Carel / Modbus board.

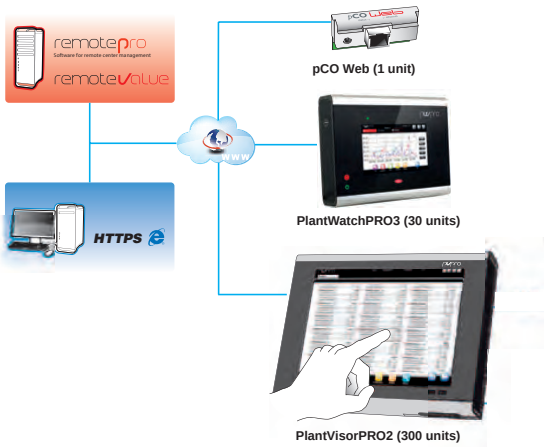

These systems allow the installation in remote management. Through a single connection to the Internet is accessed the information system. The Web interface, which is available for the local user, allows the monitoring and the complete configuration of the installation: from the office or any other user's current location.

For remote control of multiple sites, there are dedicated tools for centralized management as **RemotePRO** and **RemoteValue**.

Electrical heater (option)

Electric heater assembly in 1 stage. For 2 stages, it is necessary to check if it is possible and the price.
Important: with this option, the air fl ow controller is included.

Avalaible capacities

40HB/HF	Power supply		400 V / III ph / 50 Hz					
	Power output	kW	3	6	9	12	15	18
80 / 90	Current	A	4,3	8,7	13	17,3	-	-
120 / 160	Current	A	4,3	8,7	13	17,3	21,7	26

Frame for assembly of the electrical heater on fan supply

40HB/HF	Power output (kW)	Dimensions (mm)		
		A	B	C
80 / 90	3 a 6 kW (1 row)	150	432	341
	9 a 12 kW (2 rows)	262	432	341
120	3 a 6 kW (1 row)	150	432	341
	9 a 12 kW (2 rows)	262	432	341
	12 a 18 kW (2 rows)	262	482	443
160	3 a 12 kW (1 row)	150	547	443
	15 a 18 kW (2 rows)	262	547	443

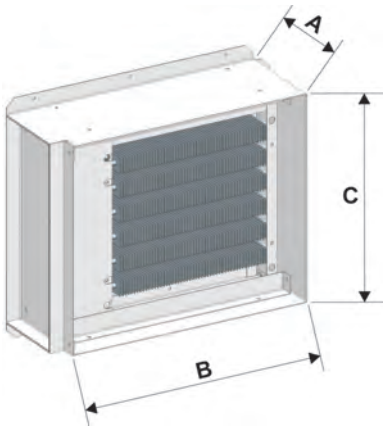

Note: This frame is designed with side access for maintenance purposes.

Auxiliary Hot Water Coil (Optional)

Two-row hot water coils for mounting in duct

40HB/HF			80	90	120	160
Nominal air flow		m³/h	4.000	4.600	6.000	7.000
Air pressure drop		mm.w.c	3,6	4,5	3,4	4,4
Water 80/60ºC	Heating capacity	kW	34,7	37,7	52,7	57,9
	Water flow	m³/h	1,5	1,6	2,3	2,5
	Water pressure drop	m.w.c	1,0	1,2	1,2	1,4
Water 90/70ºC	Heating capacity	kW	42,8	46,6	65,0	71,4
	Water flow	m³/h	1,8	2,0	2,8	3,1
	Water pressure drop	m.w.c	1,5	1,7	1,8	2,1
Weight (empty)		kg	9,5	9,5	13,5	13,5
Diameter of hydraulic connections			1 1/4”	1 1/4”	1 1/2”	1 1/2”

Unit components

Outdoor unit 38HB/HF

- Casing made of galvanised steel metal with polyester paint, white colour RAL 7035. Self-supporting frame.
- Removable panels for facilitating rapid access.

■ Outdoor air circuit

- Centrifugal fan with coupling by pulleys and belts. Electric motor(s) with tensioner, class F, IP55 and internal thermal protection. Double-intake turbines, with an impeller with front-curved blades. Greased spherical bearings, with no maintenance required.
- Anti-bird grille.
- Coil with copper pipes and aluminium fins.
- Condensates drain pan.

■ Cooling circuit

- Hermetic scroll-type compressor, assembled over antivibrations mounts. Control of phase equilibrium and the direction of rotation.
- Crankcase heater.
- Thermostatic expansion valve with external equalisation and a check valve (heat pump units).
- 4-way valve for cycle reversing (heat pump units).
- Anti-acid dehydrating filter and liquid sight glass.
- Cooling connections for welding.
- Maximum length equivalent to the 30-metre cooling line (for longer distances, consult options).

■ Protections

- High and low pressure pressostats.
- Compressor discharge temperature control.
- Non-return valve built into the compressor.
- Main door switch.
- Magnetothermic protection switches for the compressor power line and fan motor.
- Automatic switch in the control circuit.

■ Electric panel

- Complete and fully wired electrical panel.
- Transformer for power supply without neutral included in the electrical panel.
- Main ground connection.
- Compressor contactors and fan motors.

■ CARRIERrtc basic electronic control

This control is an electronic module with microprocessor comprised of a control board and a TCO user terminal that ensures the following functions:

- Selection of the operating mode:

• HEATING
• COOLING
• AUTO
• DEHUMIDIFICATION
• FAN (no icon).

- Modification of the setpoint.
- Permanent control of the operating parameters.
- View of the values measured by the sensors.
- View of the alarms produced by means of codes.
- Timing of the compressors.
- Control of the compressor discharge temperature by probe.
- Control of the ambient temperature thanks to the probe incorporated into TCO terminal. This probe can be replaced by an return or ambient probe that would be installed in the control board.
- Control of the outlet temperature to improve thermal comfort level of the installation.

• In cooling mode this control prevents excessively significant drops in the ambient temperature.
• In heating mode, it prevent the stratification of the hot air masses.

- The following features improve the energy management of the installation:

Defrosting management (in heat pump units). Possibility of intelligent defrosting that reduces energy consumption of the heat pump, by adjusting the time between defrosting operations to the actual needs of the unit.

Compensation of the setpoint based on the outdoor temperature. This function prevents thermal “shock” between the inside and outside of the premises whilst at the same time provides significant energy savings

Time schedule that reduces energy consumption, adjusting the needs of air conditioning of the building throughout the day.

TCO terminal has a schedule programmer with an intuitive graphic interface that allows 6 time slots to be chosen for each day of the week. A change in the setpoint temperature or the disconnection of the unit can be scheduled in these time slots (according to the building occupancy).

Unit components

- Optional functions:
  - Control of the auxiliary electrical heaters.
  - Proportional control of a hot water auxiliary coil.
  - Humidity control.
  - Anti-fire safety.
  - Operation during all seasons via the condensation and evaporation pressure control.
  - Detection of clogged filters and air flow control.
  - Connection to a centralised technical management system (BMS) for supervision (please see “Optional” chapter).

Optionally, this control can have a terminal for pGD1 maintenance that facilitates the initial scheduling of the unit, the modification of the operating parameters and the description of the alarms produced.

Indoor unit 40HB/HF

- Casing made of galvanised steel metal with polyester paint, white colour RAL 7035. Self-supporting frame.
- Rapid access using removable panels.

- Indoor air circuit
  - Centrifugal fan with coupling by pulleys and belts. Electric motor(s) with tensioner, class F, IP55 and internal thermal protection. Double-intake turbines, with an impeller with front-curved blades. Greased spherical bearings, with no maintenance required.
  - Supply and return air supply outlets on the same side.
  - Reusable air filters, assembled on a frame.
  - Coil with copper pipes and aluminium fins.
  - Condensates drain pan.

- Cooling circuit
  - Thermostatic expansion valve with external equalisation (check valve in 40HF series).

- Protections
  - Main door switch.

Optional

Optional for the outdoor unit 38HB/HF

- Outdoor environment
  - Coil with copper pipes and copper fins or aluminium polyurethane coated fins.
  - Condensation pressure control with damper.
- Installation
  - Antivibration mounts made of rubber.
  - Position of air supply and/or return.

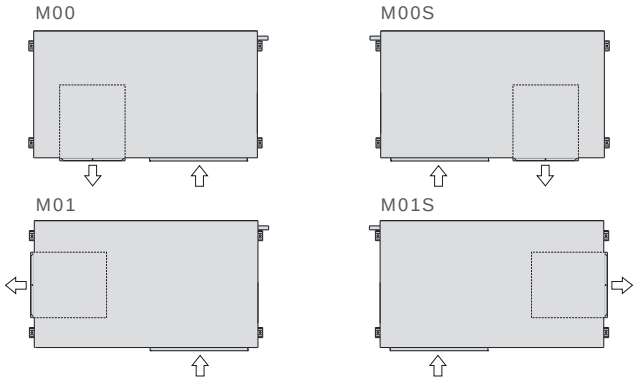

  - Different configurations of available pressure from 7 to 35 mm.w.c
  - Gravimetric filter in the air return.
  - Service valves for cooling connections.
  - Opcional for equivalent length between indoor and outdoor unit:

    * Medium-distance option (for an equivalent length from 30 to 50 metres): particle separator.

    * Long-distance option (for an equivalent length greater than 50 metres): particle separator + oil separator.
  - Compatibility with indoor units 40SZ/SF and 40NZ/NF (please consult component, dimensions schemes and options on the technical brochures of 38SZ/SF - 40SZ/SF and 38NZ/NF - 40NZ/NF series).

Outdoor unit 38HB/HF	80	90	120	160
Indoor unit 40SZ/SF or 40NZ/NF	-	90	120	160

- Acoustic
  - Acoustic insulating cover for compressor.
- Electric panel
  - Electrical power supply with neutral.

Optional for the indoor unit 40HB/HF

- Outdoor environment
  - Coil with copper pipes and copper fi ns or aluminium polyurethane coated fi ns.
- Installation
  - Antivibration mounts made of rubber.
  - Position of air supply and/or return.

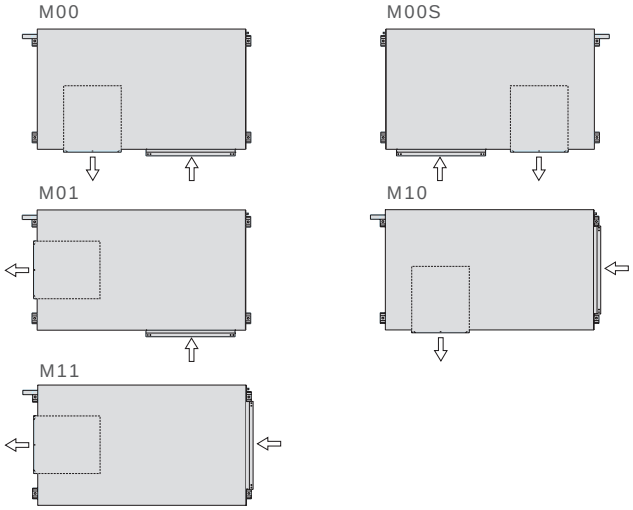

  - Different configurations of available pressure from 7 to 35 mm.w.c
  - Gravimetric filter G4 in the air supply.
- Safety
  - Soft starter of the supply fan which prolongs the set time mainly aimed at installations with cloth ducts.
  - Differential pressostat for the detection of clogged filters.
  - Differential pressostat for control of air flow.
  - Smoke detecting station in accordance with the NF S 61-961 standard.
- Comfort / heating options
  - Hot water auxiliary coil, with three-way valve, for heating in heat pump units.
  - Anti-freeze thermostat as safety system for hot water coil.
  - Auxiliary electrical heaters. With this option, the air fl ow controller is included.

Operation limits

Inlet air conditions		Cooling	Heating
Indoor coil	Minimum	14 ºC WB	10 ºC
	Maximum	22 ºC WB	27 ºC
Outdoor coil	Minimum	12 ºC (1)	-10 ºC WB (2)
	Maximum	48 ºC	15 ºC WB

(1) With a condensation pressure control operating down to -10ºC.
(2) When the outdoor temperature is usually below 5ºC WB it is recommended installing a support element.

PLEASE CONSULT YOUR SALES REPRESENTATIVE FOR DRAWINGS

38NZ/NF
40NZ/NF

NEW

Split-system

R-410A refrigerant

Outdoor unit with centrifugal fan

Confi guration flexibility

The 38NZ/NF cooling units and heat pumps feature units with a splitsystem construction with components optimised for the refrigerant R-410A.

They are presented in two different elements:

- An outdoor unit (38NZ/NF series) equipped with centrifugal fan, hermetic scroll-type compressor and electric panel with electronic control.
- An indoor unit or air-conditioning unit (40NZ/NF series) equipped with centrifugal fan and expansion valve.

A vast number of options meet numerous operating demands.

All of the units are tested and checked in the factory.

Series

■ Outdoor unit

38NZ series: Outdoor unit cooling-only air-condensed, designed for installation indoors or outdoors.

38NF series: Outdoor air-air reversible heat pump unit, designed for installation indoors or outdoors.

■ Indoor unit

40NZ series: Indoor unit cooling-only with vertical construction, designed for installation indoors, connected to a network of ducts.

40NF series: Indoor unit heat pump reversible with vertical construction, designed for installation indoors, connected to a network of ducts.

Range

	1 cooling circuit compressor					2 cooling circuits 2 compressors				
38NZ/NF	90	100	120	160	182	200	240	280	320	360
40NZ/NF	90	100	120	160	182	200	240	280	320	360
	-	-	-	-	-	2x100	2x120	-	2x160	2x182

Physical Data

38NZ/NF		90	100	120	160	182	200	240	280	320	360
Cooling											
Cooling capacity (1)	kW	19,6	23,2	26,7	36,4	38,9	47	52,9	63,8	71,8	79,8
Power input (3)	kW	8,1	9,6	10,7	13,9	15,1	19,5	21,4	24,3	27,3	31,5
EER performance		2,43	2,41	2,5	2,62	2,57	2,41	2,47	2,63	2,63	2,53
Heating											
Heating capacity (2)	kW	22	26,2	29,7	38,9	43,6	53,6	60,8	70,8	79,9	87,2
Power input (3)	kW	7,3	9	10,6	13,5	14,5	18,3	20,9	23,9	27,7	30,7
COP performance		3,02	2,91	2,81	2,88	3,01	2,92	2,92	2,96	2,89	2,84
Outdoor circuit centrifugal fan											
Nominal air flow	m^3/h	6.500	7.000	10.000	12.200	12.200	14.000	20.000	24.400	24.400	24.400
Available static pressure	mm.w.c	20									
Number / turbines		1/1					2/2				
Motor output	kW	2,2	2,2	3	4	4	2 x 2,2	2 x 3	2 x 4	2 x 4	2 x 4
Power input	kW	1,33	1,61	2,12	2,57	2,57	2 x 1,61	2 x 2,12	2 x 2,40	2 x 2,57	2 x 2,57
Speed	r.p.m.	973	1.027	837	734	734	1.027	837	703	734	734
Compressor											
Type		Scroll									
No. compressors / circuits / stages		1/1/1					2/2/2				
Oil type		Copeland 3MAF 32 cST, Danfoss POE 160 SZ, ICI Emkarate RL32 CF, Mobil EAL Artic 22 CC									
Volume of oil	l	3	03-janv	03-janv	3,3	6,2	2 x 3,3	2 x 3,3	2 x 3,3	2 x 3,3	2 x 6,2
Cooling connections											
Circuit 1: Liquid line		1/2"	1/2"	5/8"	5/8"	5/8"	1/2"	5/8"	5/8"	5/8"	5/8"
Circuit 1: Gas line		7/8"	1 1/8"	1 1/8"	1 1/8"	1 1/8"	1 1/8"	1 1/8"	1 1/8"	1 1/8"	1 1/8"
Circuit 2: Liquid line		-	-	-	-	-	1/2"	5/8"	5/8"	5/8"	5/8"
Circuit 2: Gas line		-	-	-	-	-	1 1/8"	1 1/8"	1 1/8"	1 1/8"	1 1/8"
Refrigerant											
Type		R-410A									
Global warming potential (4)	GWP	2.088									
Load up to 7,5 m	kg	9,7	10,4	11,2	14,1	15,3	19,9	21,6	28,1	29,8	29,1
Environment impact	tCO_2e	20,3	21,7	23,4	29,4	31,9	41,6	45,1	58,7	62,2	60,8
Electrical features											
Mains voltage		400 V / III ph / 50 Hz (±10%)									
Power supply		3 Wires + GND									
Maximum absorbed current											
Compressor	A	15,3	18,5	20,1	25,1	29,1	37	40,2	46	50,2	58,2
Fan	A	5	5	6,9	9	9	10	13,8	18	18	18
Control	A	0,9	0,9	0,9	0,9	0,9	1,8	1,8	1,8	1,8	1,8
Total	A	21,2	24,4	27,9	35	39	48,8	55,8	65,8	70	78
Dimensions											
Length	mm	1.191			1.471	2.186			2.746		
Width	mm	860									
Height	mm	1.437			1.717	1.437			1.717		
Weight	kg	300	315	364	378	383	588	760	775	788	798

(1) Cooling capacity calculated in accordance with the EN-14511-2013 standard given for indoor temperature conditions 27ºC (19ºC WB) and 35ºC outdoor temperature.
(2) Heating capacity calculated in accordance with the EN-14511-2013 standard given for indoor temperature conditions 20ºC and 6ºC WB outdoor temperature.
(3) Total power input by compressors and motorised fans under nominal conditions, calculated in accordance with the EN-14511-2013 standard.
(4) Climatic warming potential of a kilogram of fl uorinated greenhouse gas in relation to a kilogram of carbon dioxide over a period of 100 years.

Physical Data

40NZ/NF		90	100	120	160	182	200	240	280	320	360
Indoor circuit centrifugal fan											
Nominal air flow	m^3/h	4.000	4.600	5.200	7.000	8.000	9.200	10.300	12.500	14.000	15.500
Available static pressure	mm.w.c	15	15	15	15	15	15	20	20	20	20
Number / turbines		1 / 1					2/2				
Motor output	kW	1,1	1,5	2,2	2,2	2 x 1,1	2 x 1,5	2 x 2,2	2 x 2,2	2 x 2,2	2 x 3
Power input	kW	0,58	0,92	1,21	1,54	2 x 0,66	2 x 0,99	2 x 1,25	2 x 1,27	2 x 1,59	2 x 1,99
Speed	r.p.m.	1.076	1.132	1.199	997	1.040	1.120	1.241	984	1.020	1.064
Max. abs.current											
Fan	A	2,7	3,6	5	5	5,4	7,2	10	10	10	13,8
Dimensions											
Length	mm	1.141			1.471	2.091			2.731		
Width (5)	mm	859			859	859			859		
Height	mm	1.284			1.422	1.284			1.422		
Weight	kg	166			216	290	320	320	408	410	

(5) Upon request, it is possible to supply the frame of filters (146 mm) independently with the unit 40NZ/NF (713 mm), to be joined on site.

Sound pressure level on the outdoor unit

Measurement conditions: in free fi eld, measured at a distance of 5 metres, directivity 2 and at 1.5 metres from the ground.

38NZ/NF	90	100	120	160	182	200	240	280	320	360
Total dB(A)	55	55	58	59	59	60	61	61	62	62

Note: The sound pressure level depends on the installation conditions and, as such, it only indicated as a guide. Values obtained according to standard ISO 3744.

Sound power level on the indoor unit

Sound power level in the indoor fan outlet to be taken into account for the silencer calculation:

40NZ/NF	90	100	120	160	182	200	240	280	320	360
Total dB(A)	79	82	84	84	82	85	87	85	87	89

Additional load of R-410A refrigerant

Aditional load per linear metre of piping for equivalent maximum lengths exceeding 7 metres:

Nominal diameter	inches	1/4”	3/8”	1/2”	5/8”	3/4”	7/8”	1”	1 1/8”
Interior section	cm^2	0,149	0,444	0,900	1,505	2,282	3,120	4,290	5,346
Liquid line charge	g/m	19,3	57,0	115,0	193,5	292,3	404,1	550,3	685,7
Gas line charge	g/m	-	0,2	0,4	0,7	1,0	1,4	2,0	2,5

Electronic controls

CARRIERrtc basic & medium electronic control (standard)

Available in two versions:

- **CARRIERrtc basic :** **models 90 to 182**
- **CARRIERrtc medium :** **models 200 to 360**

Note: Optionally, the models 90 to 182 can incorporate the CARRIERrtc medium version.

CARRIERrtc basic & medium control is an electronic module with microprocessor comprised of a control board and a TCO user terminal that ensures the following functions:

- Selection of the operating mode:

- HEATING
- COOLING
- AUTO
- DEHUMIDIFICATION
- FAN (no icon).

- Modification of the setpoint.
- Permanent control of the operating parameters.
- View of the values measured by the sensors.
- View of the alarms produced by means of codes.
- Timing of the compressors.
- Control of the compressor discharge temperature by probe.
- Control of the ambient temperature thanks to the probe incorporated into TCO terminal. This probe can be replaced by an return or ambient probe that would be installed in the control board.
- Control of the outlet temperature to improve thermal comfort level of the installation.

- In cooling mode this control prevents excessively significant drops in the ambient temperature.
- In heating mode, it prevent the stratification of the hot air masses.

- The following features improve the energy management of the installation:

Defrosting management (in heat pump units). Possibility of intelligent defrosting that reduces energy consumption of the heat pump, by adjusting the time between defrosting operations to the actual needs of the unit.

Compensation of the setpoint based on the outdoor temperature. This function prevents thermal “shock” between the inside and outside of the premises whilst at the same time provides significant energy savings

Time schedule that reduces energy consumption, adjusting the needs of air conditioning of the building throughout the day.

TCO terminal has a schedule programmer with an intuitive graphic interface that allows 6 time slots to be chosen for each day of the week. A change in the setpoint temperature or the disconnection of the unit can be scheduled in these time slots (according to the building occupancy).

■ Optional functions:

- Control of the auxiliary electrical heaters.
- Proportional control of a hot water auxiliary coil.
- Humidity control.
- Anti-fire safety.
- Operation during all seasons via the condensation and evaporation pressure control.
- Detection of clogged filters and air flow control.
- Connection to a centralised technical management system (BMS) for supervision (please see “Optional” chapter).

Optionally, this control can have a terminal for pGD1 maintenance that facilitates the initial scheduling of the unit, the modification of the operating parameters and the description of the alarms produced.

CARRIERrtc electronic control (optional)

Electronic module with microprocessor comprised of a control board and a pGD1 graphic terminal installed over the unit electric panel and accessed using a polycarbonate collapsible window.

Optionally this terminal can be replaced by a TCO user terminal for installation inside of the premises. In this case the TCO terminal are not allowed to access parameters control and time schedule.

The management of the ambient temperature is controlled via a NTC ambient probe. This probe can be replaced by 1 or 2 RS485 probes.

In addition to the functions described in CARRIERrtc basic&medium control, this control allows controlling optional elements such as:

- Cooling recovery circuit.
- Electronic plug-fans.
- Enthalpic or thermoenthalpic free-cooling.
- Smoke detecting station.
- Air quality probe for measuring CO2 and/or volatile compounds..
- Energy meter.
- Refrigerant leak detector.

It also manages a local connection between units through a pLAN network (µPC MEDIUM Local Area Network), thus allowing communication of data and information for a maximum of 15 units. This enables the reduction of the number of pGD1 terminals, since a single shared terminal can monitor all control boards. It also allows to share the reading of some probes.

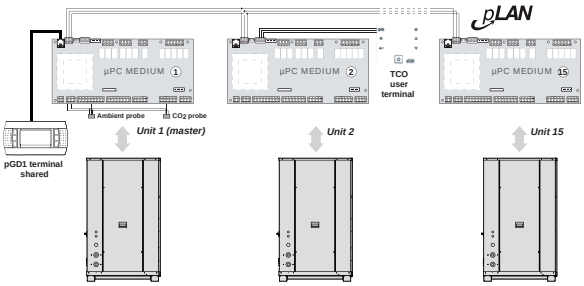

Optional

Optional for the outdoor unit 38NZ/NF

■ Outdoor environment

Temperature

- Operation during all seasons via the condensation pressure control by damper (up to -15ºC).

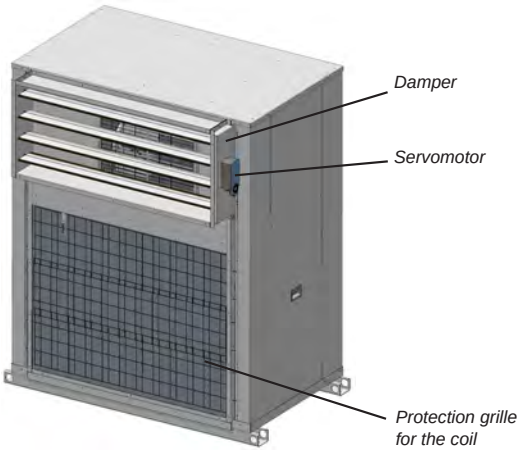

Corrosion

- Coil with copper pipes and copper fins.
- INERA® coil with copper pipes and fins of an aluminium alloy, of high performance and great resistance to the corrosion.
- Coil with copper pipes and aluminium fins with polyurethane and Blygold® coating.

Humidity

- Tropicalised electric panel.
- Tropicalised motors and fans (please consult).

■ Safety

- Soft starter of the supply fan which prolongs the set time mainly aimed at installations with cloth ducts.

■ Installation

- Antivibration mounts made of rubber.
- Service valves for cooling connections.
- Oil separator for cooling connections with maximum equivalent length of the cooling line greater than 50 metres.
- Position of air supply of the outdoor unit: side or upper.
- Different configurations of available pressure from 7 to 35 mm.w.c
- Air coil protection grille (it's not compatible with the air filter).
- Gravimetric filters in the return air. The filters frame is removable, and upon request, it is possible to supply the frame separately with the unit 38NZ/NF, to be joined on site (width = 53 mm)

■ Acoustic

- Acoustic insulating cover for compressor

■ Electric panel

- Electrical power supply with neutral.
- Energy meter for monitoring of the power consumption of the installation (with CARRIERrtc control). Available if the unit does not incorporate electrical heaters.

Optional

Optional for the indoor unit 40NZ/NF

■ Outdoor environment

Temperature

- Thermal and acoustic insulation of the casing 30 mm thick, with reaction to fire Euroclass A2-s1, d0.

Corrosion

- Coil with copper pipes and copper fins.
- INERA® coil with copper pipes and fins of an aluminium alloy, of high performance and great resistance to the corrosion (indoor unit and/or hot water coil).
- Coil with copper pipes and aluminium fins with polyurethane and Blygold® coating (indoor unit and/or hot water coil).
- Condensates drain pan in stainless steel.

■ Comfort / heating options

- Hot water auxiliary coil, with three-way valve, for heating in heat pump units.

  If the unit includes hot water coil and free-cooling, and works with negative temperatures of outdoor air, an anti-freeze thermostat as safety system is mandatory.
- Auxiliary electrical heaters. With this option, the air flow controller is included.

■ Comfort / indoor air quality options

- Filtration of the supply air:
- • Gravimetric filter G4.
- • Gravimetric filter G4 + creased opacimetric filters F6 to F9.
- • Double stage of creased opacimetric filters: F6 + F7, F6 + F8 ó F7 + F9.

- Air quality probe for installation in the environment or in duct to enable measuring CO_2 and/or volatile compounds (with CARRIERrtc control).

■ Safety

- Soft starter of the supply and/or return centrifugal fans which prolongs the set time mainly aimed at installations with cloth ducts.
- Differential pressostat for the detection of clogged filters.
- Differential pressostat for control of air flow.
- Smoke detecting station in accordance with the NF S 61-961 standard.
- Refrigerant leak detector (with CARRIERrtc control). This allows prompt identification of gas leaks, guaranteeing the safety of any people in the vicinity. Installation of the device ensures compliance with European standards F-GAS and EN378 as well as ASHRAE 15.

■ Installation

- Antivibration mounts made of rubber.
- Compatibility 2 x 1: two indoor units: 40NZ/NF and one outdoor unit: 38NZ/NF (models 200 to 360).
- • Two indoor units can be operated:
- * simultaneously, with a single control and a single terminal.
- * separately, each unit with its control and its own terminal.
- * two indoor units can be operated separately, each unit with its control board but with a single terminal (only with CARRIERrtc control and pLAN network).
- • The option of simultaneous operation is not possible for indoor units with supply plug-fan or mixing box.

Compatibility 2 x 1	Models			
Outdoor unit: 38NZ/NF	200	240	320	360
Indoor unit: 40NZ/NF	2 x 100	2 x 120	2 x 160	2 x 180

- Centrifugal supply fan with high available pressure, from 7 to 60 mm.w.c.
- Electronic plug-fan(s) in air supply and/or return (please consult optional for “Energy saving/recovery”).
- Position of supply and/or return of the indoor circuit air: side or upper.
- Supply plenum with punched or double deflection grille, which allows air to be discharged through either side.

  Note: Upper suply of the 40NZ/NF unit is mandatory with this plenum.

Optional

Optional for the indoor unit 40NZ/NF

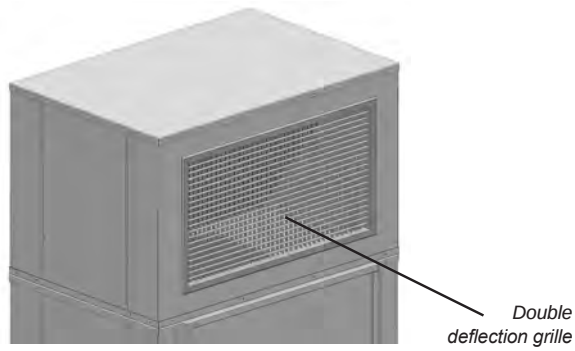

Mixing box for air renewal and free-cooling
Module separated from the unit that allows the air renewal and el free-cooling (please consult optional for “Energy saving/recovery”).

It’s available in two configurations:

Horizontal box (MFHA module):

- 2 motorised dampers:

  Outdoor air intake with damper, interlocked with return damper.

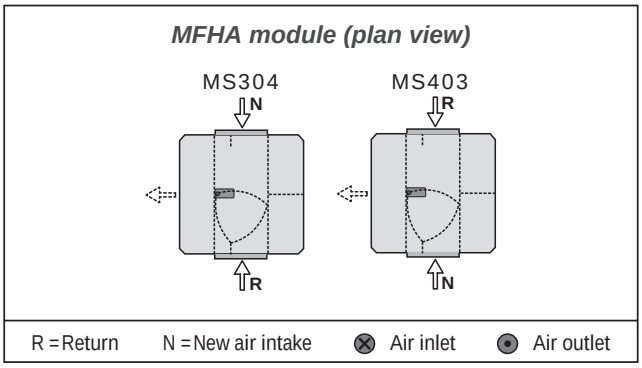

Vertical box (MFVA module) (models 182 to 360):

- 2 motorised dampers:
  - Outdoor air intake with damper, interlocked with return damper.

    Module: MS000.
- 3 motorised dampers:
  - Return plug-fan.

    Module: MC000
  - Return plug-fan and recovery circuit (please consult optional for “Energy saving/recovery”).

    Module: MRC000

Note: Vertical supply of the 40NZ/NF unit (M00 assembly) is mandatory with this box.

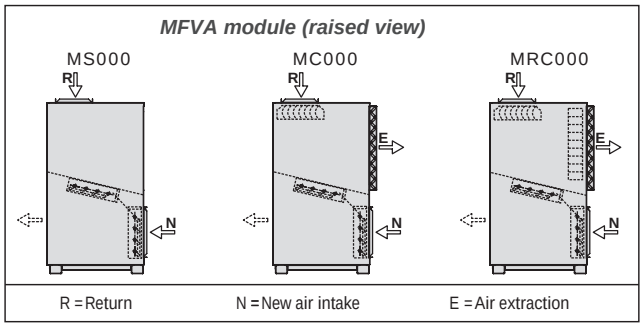

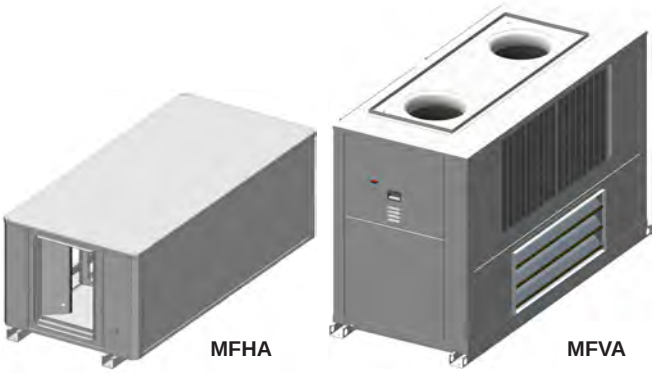

Enregy saving / recovery

■ Free-cooling

On units with mixing box, the free-cooling can be managed by the electronic control. This function allows the outdoor air conditions to be taken advantage of when these are more favourable than those of the return (or ambient) air. As such, this allows the cooling capacity to be reduced under these circumstances. The percentage of air renewal will range from 0% to 100%.

There are three options for the free-cooling management:

- Thermal, with comparison of temperatures.
- Enthalpic, with comparison of enthalpies.
- Thermoenthalpic, with comparison of enthalpies and a correction for temperature.

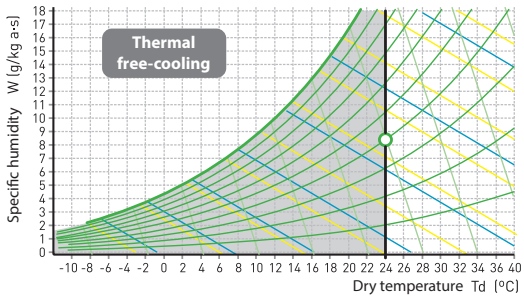

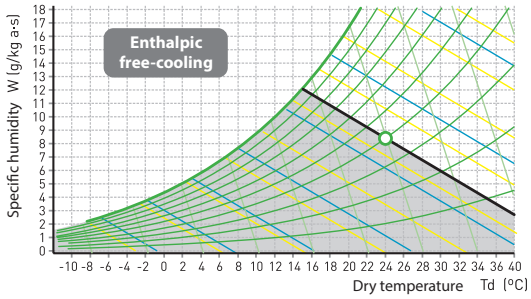

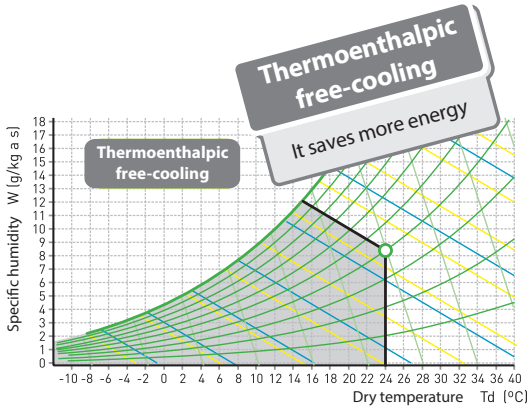

Note: With enthalpic or thermoenthalpic free-cooling change to the CARRIERrtc electronic control is obligatory

■ Active recovery (models 182 to 360)

- Circuit dedicated to recovery, with independent control, adapted to the air renewal requirements in order to raise the COP and EER of the unit set.

  Note: With this option change to the CARRIERrtc electronic control is obligatory

■ The circuit is composed by:

- Plug-fan in vertical-design box with MRC000 assembly.
- Air circuit comprised of coils with copper pipes and aluminium fins.
- Thermostatic expansion valve with external equalisation.
- Hermetic scroll-type compressor with sound insulation, assembled over antivibration mounts.
- Crankcase heater.
- Four-way cycle reversing valve (heat pump units).
- Anti-acid dehydrator filter.
- Condensates drain pan.

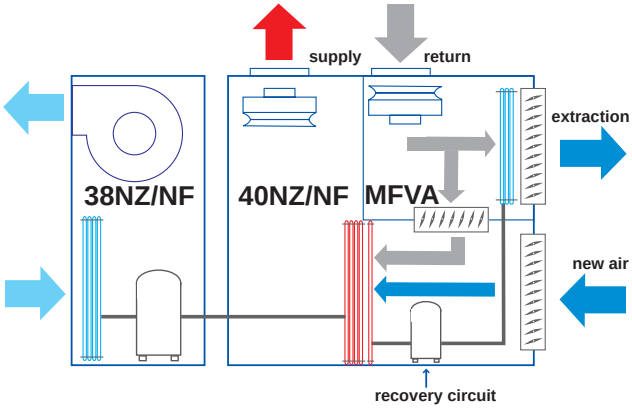

■ Plug-fan

- Electronic plug-fans in outlet and/or return with variable speed and flow sensor.

  Note: With this option change to the CARRIERrtc electronic control is obligatory.
- Facilities type of service industries consumption of fans associated with air transportation assumes a high % of the annual consumption of air conditioning. The use of fans of greater efficiency has a direct impact on the reduction of consumption. Plug-fans with variable speed have associated the following advantages:

- Elimination of friction loss of the transmission by direct link.
- Greater efficiency aeraulics of the rotor (impeller jet with optimized profile), with very high available pressure.
- Greater efficiency of the motor, DC motors of permanent magnets powered by electronic switching integrated in the motor.
- Variable speed that allows to keep the outlet flow constant regardless of the degree of clogging of filters.
- Accurate measurement of flow, a section calibrated in the fan aspiration and a differential pressure sensor allow control handling flow reliably both on VAC as VAV systems.

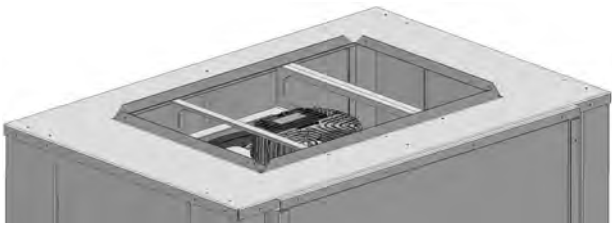

Optional for electronic controls

■ Control

CARRIERrtc basic / medium (standard)

- pGD1 terminal for maintenance of the unit.
- Kit remote control to 200 meters with pGD1 terminal (pGD1 terminal + 2 TCONN bypass cards).

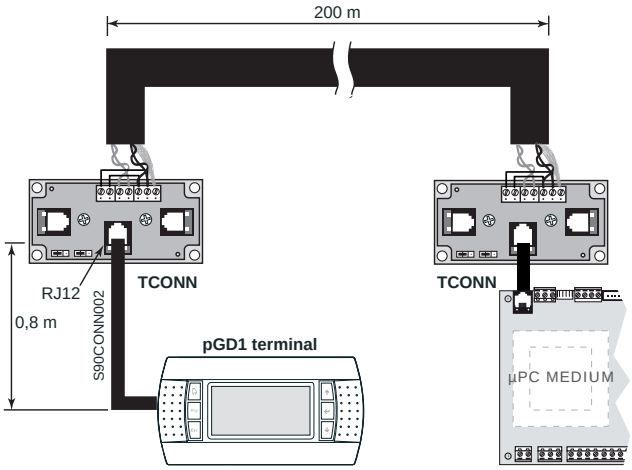

- Return or ambient temperature probe connected to the board that replaces the ambient probe of the thermostat TCO. This probe is required for anti-fire safety.
- Mixing temperature probe: compulsory to manage of the free-cooling.

CARRIERrtc (optional)

- TCO user terminal, instead of pGD1 terminal.
- Control without pGD1 terminal (for units with shared teminal).
- Kit remote control to 200 meters with pGD1 terminal (pGD1 terminal + 2 TCONN bypass cards).
- RS485 ambient temperature probe (optional). By default the control incorporates a NTC probe.

  Note: An ambient probe probe with RS485 communication is required for installation to more than 30 m.
- Double ambient temperature probe with RS485 (optional).
- Ambient T+RH probe with RS485 (compulsory in units with enthalpic or thermoenthalpic free-cooling as optional). In this case also added outdoor air humidity probe.
- Air quality probe for installation in the environment or in duct to enable measuring CO_2 and/or volatile compounds.

■ Communication

CARRIERrtc basic & medium and CARRIERrtc controls allow the connection to a centralised technical management system by using a specific BMS card for some of the following communication protocols:

- RS485 serial cards for network communication with protocols: Carel, Modbus, LonWorks®, BACnet™ MSTP, Konnex.
- Ethernet pCO Web card for network communication with protocols: Modbus TCP/IP, BACnet™ Ethernet, TCP/IP, SNMP V1-2-3, FTP and HTTP.

Supervision solutions

Different solutions of supervision are available according to the dimensions of the installation.

- **pCO Web**

It is the solution for the management and supervision of a single unit if it incorporates the Ethernet pCO Web card.

- **PlantWatchPRO3**

It is a solution designed for the monitoring of installations of medium - small dimensions, with ability to manage up to 30 units. Suitable for technical environments, it has no parts in movement. It's available in two versions: panel and wall.

Includes: 7 " touch display, buzzer for notifi cations, 1 USB port and 1 SD card slot for downloading reports, charge devices models and applying service packs.

In this case, each unit needs one RS485 Carel / Modbus board.

- **PlantVisorPRO2**

This is the solution for the management and supervision of air-conditioning installations with up to 300 units. It performs advanced monitoring and maintenance functions and enables creating areas and groups which simplify the management of the installation. It also allows the integration of energy meters for monitoring the power consumption of the installation.

PlantVisorPRO2 is available in two versions:

- **Box:** comprised of the CPU unit and, optionally, by monitor and keyboard.
- **Touch:** this includes the CPU and the touchscreen in the one device.

In this case, each unit needs one RS485 Carel / Modbus board.

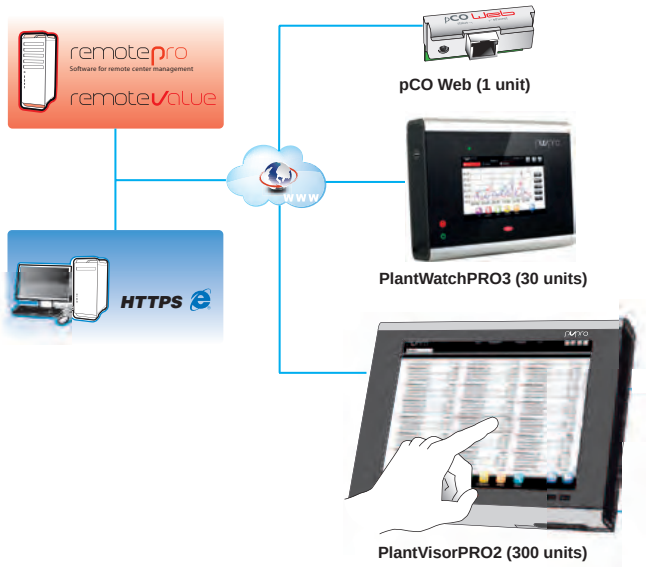

These systems allow the installation in remote management. Through a single connection to the Internet is accessed the information system. The Web interface, which is available for the local user, allows the monitoring and the complete configuration of the installation: from the office or any other user's current location.

For remote control of multiple sites, there are dedicated tools for centralized management as RemotePRO and RemoteValue.

Optionals for the indoor units: 40NZ/NF series

Auxiliary hot water coil

Hot water coil assembled inside the unit with a three-way valve managed by the unit control for back-up during heating in heat pump units. In this

case the air inlet temperature matches the air outlet temperature of the indoor coil.

The 3-way valve is supplied in a separate kit for installation on site away from the unit.

40NZ/NF			90	100	120	160	182	200	240	280	320	360
Air pressure drop		mm.w.c	2,9	3,6	4,5	4,2	2,7	3,4	4,0	2,9	3,5	4,1
Water 80/60°C	**Heating capacity**	kW	12,9	13,7	14,9	23,0	30,2	31,6	33,6	44,6	47,4	50,8
	Water flow	m^3/h	0,6	0,6	0,7	1,0	1,3	1,4	1,5	2,0	2,1	2,2
	Water pressure drop	m.w.c	0,1	0,1	0,2	0,5	0,4	0,5	0,5	0,3	0,3	0,4
Water 90/70°C	**Heating capacity**	kW	17,9	19,2	20,8	31,5	41,2	43,5	46,5	61,3	65,4	70,0
	Water flow	m^3/h	0,8	0,9	0,9	1,4	1,8	1,9	2,0	2,7	2,9	3,1
	Water pressure drop	m.w.c	0,2	0,3	0,3	0,8	0,8	0,9	1,0	0,5	0,6	0,7
Weight (empty)		kg	7,8	7,8	7,8	11,0	16,3	16,3	16,3	34,4	34,4	34,4
Diameter of hydraulic connections			3/4”			1”						

Electrical heaters

- Important: with this option, the air flow controller is included.
- Standard assembly in two stages inside the unit.
- In the case of two indoor units with the one outdoor unit the assembly of the support is not possible in two stages (each indoor unit is equivalent to 1 stage).

40NZ/NF	Total output	kW	6	9	12	15	18	24	30	36
	Stage power	kW	3 + 3	3 + 6	6 + 6	6 + 9	9 + 9	12 + 12	15 + 15	18 + 18
Current (A) (400V / IIIph / 50Hz)	90 / 100 / 120		8,7	13	17,3	unavailable				
	160		unavailable		17,3	21,7	26	unavailable		
	182 / 200 / 240 / 280 / 320 / 360		unavailable			21,7	26	34,6	53,4	52
Weight of the module		kg	7,7	9,3	10,7	12,6	14,6	21,4	25,2	29,2

Supply plug-fan of variable speed

Important: With this option change to the CARRIERrtc electronic control is obligatory.

40NZ/NF		90	100	120	160	182	200	240	280	320	360
Air pressure drop	mm.w.c	2,9	3,6	4,5	4,2	2,7	3,4	4,0	2,9	3,5	4,1
Nominal available static pressure	mm.w.c	15	15	15	15	15	15	20	20	20	20
Nominal power input	kW	00-janv	0,79	0,95	1,33	2 x 0,61	2 x 0,78	2 x 1,04	2 x 1,16	2 x 1,40	2 x 1,67
Maximum available static pressure	mm.w.c	84,1	79,4	74	61,3	86,5	80,3	75,6	73,4	64,2	53,1
Number		1				2					
Diameter	(mm)	500									
Speed	(r.p.m.)	1.700									
Motor output	(kW)	1 x 2,68				2 x 2,68					
Maximum absorbed current	(A)	4,2				8,4					

Optionals for the indoor units: 40NZ/NF series

Return plug-fan of variable speed (MC assembly)

Important: With this option change to the CARRIERrtc electronic control is obligatory.

40NZ/NF			182	200	240	280	320	360
Nominal air flow		m³/h	8.000	9.200	10.300	12.500	14.000	15.500
Nominal available static pressure		mm.w.c.	15	15	20	20	20	20
Nominal power input		kW	2 x 0,44	2 x 0,53	2 x 0,73	2 x 0,79	2 x 0,95	2 x 1,14
Maximum available static pressure		mm.w.c.	126,3	123,2	117,1	86,9	79,9	70,5
Number			2					
Diameter		mm	400			500		
Speed		r.p.m.	2.500			1.700		
Motor output		kW	2 x 3,0			2 x 2,68		
Maximum absorbed current		A	9,2			8,4		
Dimensions of the module	**Long**	mm	2.091			2.731		
	Width	mm	883			883		
	Height	mm	1.311			1.448		
Module weight		kg	292			397		

Return plug-fan of variable speed (MC assembly)

Important: With this option change to the CARRIERrtc electronic control is obligatory.

40NZ/NF			182	200	240	280	320	360
Return plug-fan	**Nominal flow**	m³/h	8.000	9.200	10.300	12.500	14.000	15.500
	Nom. available static pressure	mm.w.c.	15	15	20	20	20	20
	Nominal power input	kW	2 x 0,57	2 x 0,67	2 x 0,92	2 x 0,92	2 x 1,12	2 x 1,35
	Max. available static pressure	mm.w.c.	118,0	114,3	106,4	81,2	72,8	62,5
Recovery compressor characteristics	**Type**		Scroll					
	No. of compressors / circuits		1 / 1					
	Oil type		Copeland 3MAF 32 cST, Danfoss POE 160 SZ, ICI Emkarate RL32 CF, Mobil EAL Artic 22 CC					
	Volume of oil	l	1,6	1,6	1,6	3,0	3,0	3,0
	Maximum absorbed current	A	9,0	9,0	13,0	15,3	15,3	15,3
Refrigerant load R-410A		kg	2,5	2,5	2,6	4,3	4,3	4,3
Dimensions of the module	**Long**	mm	2.091			2.731		
	Width	mm	883			883		
	Height	mm	1.311			1.448		
Module weight		kg	367			502		

Note: Data of total cooling and heating capacities with MRC recovery circuit can be consulted, for different temperature and humidity conditions, on pages 19 to 26 of this brochure.

Outdoor unit 38NZ/NF

The 38NZNF unit can incorporate a return air filter

Operation during "all seasons" via the condensation pressure control by damper

Indoor unit 40NZ/NF **MFVA module**

Centrifugal fans or plug-fans (optional)

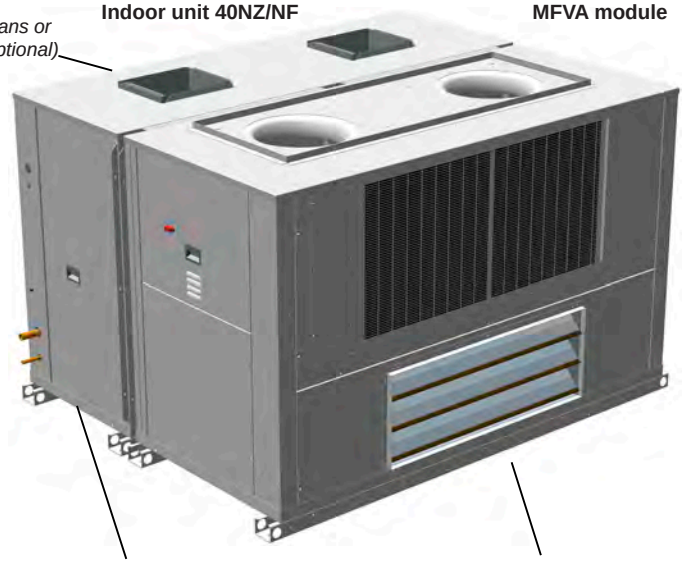

Indoor air quality using different combinations of gravimetric and opacimetric filters

Free-cooling module (optional) with built-in plug-fan and posibility of cooling recovery circuit

Unit components

Outdoor unit 38NZ/NF

- Casing made of galvanised steel metal with polyester paint, white colour RAL 7035. Self-supporting frame.

■ Outdoor air circuit
- Centrifugal fan coupling by pulleys and belts. Electric motor(s) with tensioner, class F, IP55 and internal thermal protection. One double-intake turbine, with an impeller with front-curved blades. Greased spherical bearings, with no maintenance required.
- Coil(s) with copper pipes and aluminium fins.
- Condensates drain pan.

■ Cooling circuit
- Hermetic scroll-type compressor(s), assembled over antivibration mounts. Control of phase equilibrium and the direction of rotation.
- Crankcase heater.
- Thermostatic expansion valve with external equalisation (heat pump units).
- Four-way cycle reversing valves (heat pump units).
- Particle separator(s), anti-acid dehydrating filter(s), liquid receiver(s).
- Cooling connections for welding.
- Maximum equivalent length of the cooling line 50 metres (for longer distances an oil separator must be used).

■ Electric panel
- Complete and fully wired electric panel. Insulated panel cover to prevent condensation. Protection IP55.
- Transformer for power supply without neutral included in the electrical panel.
- Main ground connection.
- Compressor(s) and fan(s) motor contacts.

■ Protections
- High and low pressure pressostats.
- Compressor discharge temperature control.
- Non-return valve built into the compressor.
- Main door switch.
- Magnetothermic protection switches for the compressor(s) power line and fans motor.
- Automatic switch in the control circuit.

Indoor unit 40NZ/NF

- Casing made of galvanised steel metal with polyester paint, white colour RAL 7035. Self-supporting frame.

■ Indoor air circuit
- Coil with copper pipes and aluminium fins.
- Centrifugal fan(s) coupling by pulleys and belts. Electric motor(s) with tensioner, class F, IP55 and internal thermal protection. Double-intake turbines, with an impeller of front-curved blades. Greased spherical bearings, with no maintenance required.
- Reusable air filters, assembled on a frame.
- Condensate drain pan.

■ Cooling circuit
- Thermostatic expansion valve(s) with external equalisation (check valve in 40NF series).

■ Protections
- Main door switch.

Operating limits

Inlet air conditions		Cooling	Heating
Indoor coil	Minimum	14 °C WB	10 °C
	Maximum	22 °C WB	27 °C
Outdoor coil	Minimum	12 °C (1)	-10 °C WB
	Maximum	48 °C	15 °C WB

(1) With control of condensation pressure activated up to -10°C.

Please consult your sales representative for drawings

50EN/EH

NEW

Nominal cooling capacity 20-85 kW
Nominal heating capacity 20-90kW

Packaged unit all in one

High efficiency

Silent operation

Configuration flexibility

Plug-fans with EC motor

The 50EN/EH cooling units and heat pumps are autonomous air-air units with a compact monoblock, horizontal rooftop design.

They are equipped with electronic axial fans and plug-fans, air coils, hermetic scroll compressors in tandem and electronic control with microprocessor, components optimised for the R-410A refrigerant.

These units have been designed for the air conditioning of large surface areas used for business or industry. They are quick to install and operate reliably. A vast number of options meet numerous operating demands.

All of the units are tested and checked in the factory.

50EN Series : Autonomous air-air cooling units with a compact horizontal rooftop construction.

50EH Series : Autonomous reversible air-air heat pump units with a compact horizontal rooftop construction.

Physical data (EN-14511-2013)

50EN/EH		90HEE	90T	120HEE	120T	160HEE	160T	180HEE	180T
Cooling									
Cooling capacity *	kW	21,2	23,1	25,2	30,1	33,4	38,1	42,5	46,3
Power input ***	kW	7,1	8,2	8,4	10,7	11,1	13,6	14,1	16,5
EER performance		3,01	2,81	3,01	2,81	3,01	2,81	3,01	2,81
Heating									
Heating capacity **	kW	21,7	24,0	25,7	31,1	34,5	39,3	42,8	46,7
Power input ***	kW	6,4	7,5	7,5	9,7	10,1	12,2	12,5	14,6
COP performance		3,41	3,21	3,41	3,21	3,41	3,21	3,41	3,21
Outdoor circuit fan									
Nominal air flow	m^3/h	8000		13000		17000			
Available static pressure	mm.w.c	4							
Type		Electronic axial fan							
Number / Diameter	mm	1 / 630		1 / 800					
Motor output	kW	0,9		2,2					
Power input in COOLING	kW	0,5	0,5	1,5	1,5	1,4	1,4	1,6	1,6
Power input in HEATING	kW	0,7	0,7	2,2	2,2	1,9	1,9	2,3	2,3
Speed	r.p.m.	1000		980					
Indoor circuit supply fan									
Nominal air flow	m^3/h	4000		6000		8700		9000	
Available static pressure	mm.w.c	12	12	12	15	15	15	15	15
Type		Electronic plug-fan							
Number / Diameter	mm	1 / 500				2 / 500			
Motor output	kW	2,68				2 x 2,68			
Power input	kW	0,5	0,5	0,9	1,0	1,4	1,4	1,6	1,6
Speed	r.p.m.	1700				2 / 1700			
Compressor									
Type		Scroll							
Number of compressors		2							
Number of stages		2							
Number of circuits		1							
Oil type		Copeland 3MAF 32cST, Danfoss POE 160SZ, ICI Emkarate RL 32CF, Mobil EAL Artic 22CC							
Volume of oil	l	3,1	3,1	3,1	3,1	3,1	3,1	3,1	5,3
Electrical characteristics									
Electrical power supply		400 V / III ph / 50 Hz (±10%)							
Power supply		3 wires + ground							
Maximum absorbed current									
Compressor(s)	A	12,0	13,6	13,6	20,8	25,9	31,7	31,7	25,4
Outdoor fan(s)	A	2,0	2,0	3,4	3,4	3,4	3,4	3,4	3,4
Indoor fan	A	4,2	4,2	4,2	4,2	8,4	8,4	8,4	8,4
Control	A	0,9	0,9	0,9	0,9	0,9	0,9	0,9	0,9
Total	A	19,1	20,7	22,1	29,3	38,6	44,4	44,4	38,1
Refrigerant									
Type		R-410A							
Global warming potential (GWP) ****		2.088							
Charge	kg	6,0	6,0	7,5	7,5	8,5	8,5	10,0	10,0
Environment impact	tCO2eq	12,5	12,5	15,7	15,7	17,7	17,7	20,9	20,9
Dimensions									
Length	mm	2400				2400			
Width	mm	1400				1400			
Height	mm	1497				1675			
Weight	kg	595	595	616	616	694	694	734	734
Condensate outlet Ø		1 1/4" adaptor							

* Cooling capacity calculated in accordance with the EN-14511-2011 standard given for indoor temperature conditions 27ºC, (19ºC WB) and 35ºC outdoor temperature.
** Heating capacity calculated in accordance with the EN-14511-2011 standard given for indoor temperature conditions 20ºC and 6ºC WB outdoor temperature.
*** Total power input by compressors and motorised fans under nominal conditions, calculated in accordance with the EN-14511-2011 standard.
**** Climatic warming potential of a kilogram of fluorinated greenhouse gas in relation to a kilogram of carbon dioxide over a period of 100 years.
Note: HEE = Class A efficiency

Physical data (EN-14511-2013)

50EN/EH		200HEE	240HEE	240T	320HEE	320T	360HEE	360T
Cooling								
Cooling capacity *	kW	52,7	58,5	61,3	71,3	74,6	79,9	85,2
Power input ***	kW	17,5	19,4	21,8	23,7	26,5	26,5	30,3
EER performance		3,01	3,01	2,81	3,01	2,81	3,01	2,81
Heating								
Heating capacity **	kW	55,6	62,5	66,1	74,4	78,7	86,0	88,7
Power input ***	kW	16,3	18,3	20,6	21,8	24,5	25,2	27,6
COP performance		3,41	3,41	3,21	3,41	3,21	3,41	3,21
Outdoor circuit fan								
Nominal air flow	m^3/h	30000						
Available static pressure	mm.w.c	4						
Type		Electronic axial fan						
Number / Diameter	mm	2 / 800						
Motor output	kW	2 x 2,2						
Power input in COOLING	kW	2,2	2,2	2,2	2,5	2,5	2,5	2,5
Power input in HEATING	kW	3,1	3,1	3,1	3,2	3,2	3,2	3,2
Speed	r.p.m.	2 / 980						
Indoor circuit supply fan								
Nominal air flow	m^3/h	10000	12000		14300		15900	
Available static pressure	mm.w.c	20	20	20	20	25	25	25
Type		Electronic plug-fan						
Number / Diameter	mm	2 / 500						
Motor output	kW	2 x 2,68						
Power input	kW	1,7	2,2	2,2	3,0	3,3	3,7	3,7
Speed	r.p.m.	2 / 1700						
Compressor								
Type		Scroll						
Number of compressors		4						
Number of stages		4						
Number of circuits		2						
Oil type		Copeland 3MAF 32cST, Danfoss POE 160SZ, ICI Emkarate RL 32CF, Mobil EAL Artic 22CC						
Volume of oil	l	6,3	6,3	6,3	6,3	6,3	6,3	8,5
Electrical characteristics								
Electrical power supply		400 V / III ph / 50 Hz (±10%)						
Power supply		3 wires + ground						
Maximum absorbed current								
Compressor(s)	A	36,1	41,6	48,3	55,0	59,2	63,4	62,3
Outdoor fan(s)	A	6,8	6,8	6,8	6,8	6,8	6,8	6,8
Indoor fan	A	8,4	8,4	8,4	8,4	8,4	8,4	8,4
Control	A	1,8	1,8	1,8	1,8	1,8	1,8	1,8
Total	A	53,1	58,6	65,3	72,0	76,2	80,4	79,3
Refrigerant								
Type		R-410A						
Global warming potential (GWP) ****		2.088						
Charge	kg	11,5	11,5	11,5	15,0	15,0	17,0	17,0
Environment impact	tCO2eq	24,0	24,0	24,0	31,3	31,3	35,5	35,5
Dimensions								
Length	mm	2750					2750	
Width	mm	2115					2115	
Height	mm	1705					2005	
Weight	kg	1071	1071	1071	1104	1104	1210	1210
Condensate outlet Ø		1 1/4" adaptor						

* Cooling capacity calculated in accordance with the EN-14511-2011 standard given for indoor temperature conditions 27ºC, (19ºC WB) and 35ºC outdoor temperature.
** Heating capacity calculated in accordance with the EN-14511-2011 standard given for indoor temperature conditions 20ºC and 6ºC WB outdoor temperature.
*** Total power input by compressors and motorised fans under nominal conditions, calculated in accordance with the EN-14511-2011 standard.
**** Climatic warming potential of a kilogram of fluorinated greenhouse gas in relation to a kilogram of carbon dioxide over a period of 100 years.
Note: HEE = Class A efficiency

Sound levels dB(A)

Standard unit

Sound power level

50EN/EH	90HEE 90T	120HEE 120T	160HEE 160T	180HEE 180T	200HEE	240HEE 240T	320HEE 320T	360HEE 360T
63 Hz	34,2	43,2	47,2	48,2	48,2	48,2	48,2	49,2
125 Hz	47,5	56,5	60,5	61,5	61,5	61,5	61,5	62,5
250 Hz	56,3	65,3	69,3	70,3	70,3	70,3	70,3	71,3
500 Hz	64,3	73,3	77,3	78,3	78,3	78,3	78,3	79,3
1000 Hz	70,7	79,7	83,7	84,7	84,7	84,7	84,7	85,7
2000 Hz	66,1	75,1	79,1	80,1	80,1	80,1	80,1	81,1
4000 Hz	58,8	67,8	71,8	72,8	72,8	72,8	72,8	73,8
8000 Hz	47,7	56,7	60,7	61,7	61,7	61,7	61,7	62,7
Total dB(A)	73,0	82,0	86,0	87,0	87,0	87,0	87,0	88,0

Sound pressure level

Measurement conditions: in a clear field, measured at a distance of 5 metres, directivity 2 and at 1,5 metres from the ground.

50EN/EH	90HEE 90T	120HEE 120T	160HEE 160T	180HEE 180T	200HEE	240HEE 240T	320HEE 320T	360HEE 360T
Total dB(A)	46,4	55,4	59,4	60,4	60,1	60,1	60,1	61,0

Note: The sound pressure level depends on the installation conditions and, as such, it only indicated as a guide. Values obtained according to the ISO 3744 standard.

Unit with return plug-fan in top box MC1 (optional)

Sound power level

50EN/EH	90HEE 90T	120HEE 120T	160HEE 160T	180HEE 180T	200HEE	240HEE 240T	320HEE 320T	360HEE 360T
63 Hz	35,2	44,2	48,2	49,2	49,2	49,2	49,2	50,2
125 Hz	48,5	57,5	61,5	62,5	62,5	62,5	62,5	63,5
250 Hz	57,3	66,3	70,3	71,3	71,3	71,3	71,3	72,3
500 Hz	65,3	74,3	78,3	79,3	79,3	79,3	79,3	80,3
1000 Hz	71,7	80,7	84,7	85,7	85,7	85,7	85,7	86,7
2000 Hz	67,1	76,1	80,1	81,1	81,1	81,1	81,1	82,1
4000 Hz	59,8	68,8	72,8	73,8	73,8	73,8	73,8	74,8
8000 Hz	48,7	57,7	61,7	62,7	62,7	62,7	62,7	63,7
Total dB(A)	74,0	83,0	87,0	88,0	88,0	88,0	88,0	89,0

Sound pressure level

Measurement conditions: in a clear field, measured at a distance of 5 metres, directivity 2 and at 1,5 metres from the ground.

50EN/EH	90HEE 90T	120HEE 120T	160HEE 160T	180HEE 180T	200HEE	240HEE 240T	320HEE 320T	360HEE 360T
Total dB(A)	47,4	56,4	60,4	61,4	61,1	61,1	61,1	62,0

Note: The sound pressure level depends on the installation conditions and, as such, it only indicated as a guide. Values obtained according to the ISO 3744 standard.

Unit with return plug-fan in top box and MRC1 cooling recovery circuit (optional)

Sound power level

50EN/EH	90HEE 90T	120HEE 120T	160HEE 160T	180HEE 180T	200HEE	240HEE 240T	320HEE 320T	360HEE 360T
63 Hz	36,2	45,2	49,2	50,2	50,2	50,2	50,2	51,2
125 Hz	49,5	58,5	62,5	63,5	63,5	63,5	63,5	64,5
250 Hz	58,3	67,3	71,3	72,3	72,3	72,3	72,3	73,3
500 Hz	66,3	75,3	79,3	80,3	80,3	80,3	80,3	81,3
1000 Hz	72,7	81,7	85,7	86,7	86,7	86,7	86,7	87,7
2000 Hz	68,1	77,1	81,1	82,1	82,1	82,1	82,1	83,1
4000 Hz	60,8	69,8	73,8	74,8	74,8	74,8	74,8	75,8
8000 Hz	49,7	58,7	62,7	63,7	63,7	63,7	63,7	64,7
Total dB(A)	75,0	84,0	88,0	89,0	89,0	89,0	89,0	90,0

Sound pressure level

Measurement conditions: in a clear field, measured at a distance of 5 metres, directivity 2 and at 1,5 metres from the ground.

50EN/EH	90HEE 90T	120HEE 120T	160HEE 160T	180HEE 180T	200HEE	240HEE 240T	320HEE 320T	360HEE 360T
Total dB(A)	48,4	57,4	61,4	62,4	62,1	62,1	62,1	63,0

Note: The sound pressure level depends on the installation conditions and, as such, it only indicated as a guide. Values obtained according to the ISO 3744 standard.

Options

Configuration options (depending on the indoor air circulation)

Assembly	Legend
M w x y └─ Air outlet (0 : standard, 1 : optional, 2 : optional) └─ Air return (0 : standard, 1 : optional, 2 : optional) └─ Type of assembly	I = Air outlet R = Air return N = New air inlet E = Air extraction

Standard assembly

■ **M0 assembly:** Change of outlet and/or return air position in the indoor circuit

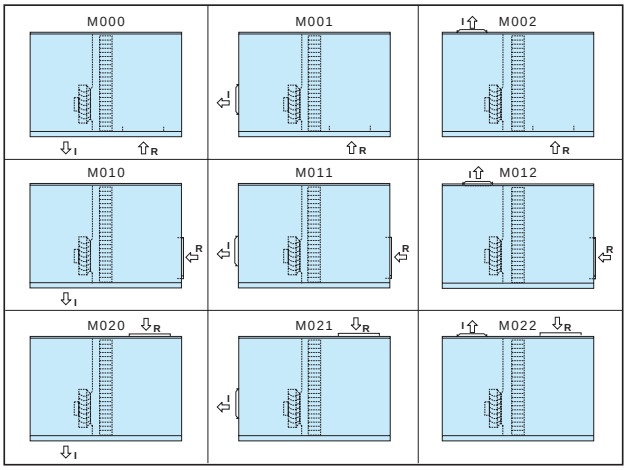

Assemblies with mixing box and free-cooling

■ **MS assemblies:** Outdoor air intake with damper, interlocked with return damper (mixing box of 2 dampers).

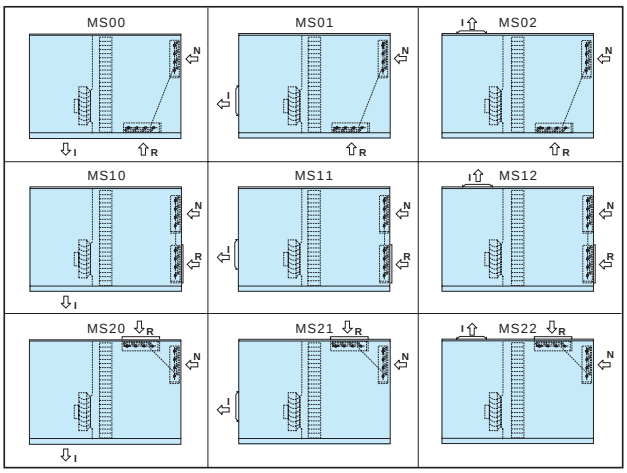

■ **ME assemblies:** Axial air extraction fan (mixing box of 3 dampers)

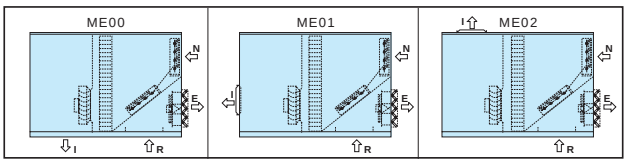

■ **MA assemblies:** Axial return and air extraction fan (mixing box of 3 dampers)

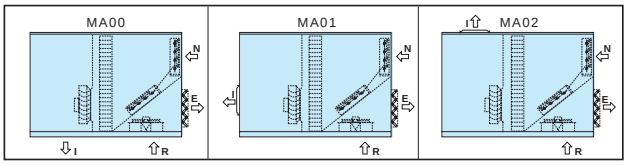

■ **MC0 assemblies:** Electronic lower plug-fan (mixing box of 3 dampers)

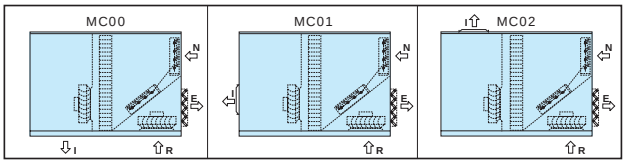

■ **MRC0 assemblies:** Electronic lower plug-fan (mixing box of 3 dampers) + cooling recovery circuit

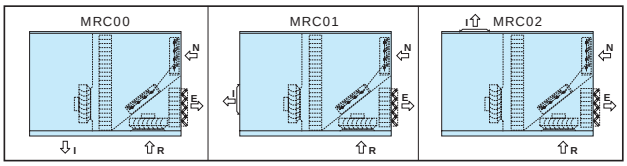

■ **MC1 assemblies:** Electronic plug-fan or centrifugal fan in top box (mixing box of 3 dampers)

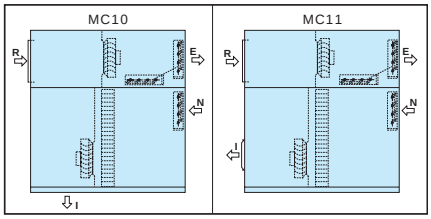

■ **MRC1 assemblies:** Electronic plug-fan or centrifugal fan in top box (mixing box of 3 dampers) + cooling recovery circuit

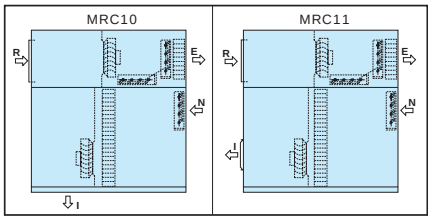

Outdoor ambient temperature options

- Temperature
  - Thermal and acoustic insulation 50 mm thick, with fire classification Euroclasse A2-s1, d0.

Cover loss:

Conditions	Winter	
Indoor	**20ºC**	**50% RH**
Outdoor	**-20ºC**	**94% RH**
9mm NBR (std)	1790 W	2.0% HC
50mm rock wool	437 W	0.4% HC

Conditions	Summer	
Indoor	**27ºC**	**50% RH**
Outdoor	**35ºC**	**40% RH**
9mm NBR (std)	615 W	1.00% TCC
50mm rock wool	151 W	0.24% TCC

  - Electrical heater for protection of the components of the electric panel. This is compulsory if the outdoor temperature is lower than -8ºC WB. With an outdoor temperature ower than -16ºC WB will be compulsory a reinforced resistance.
  - Compressor with protection for low temperature (supplementary crankcase heater). This is compulsory if the outdoor temperature is lower than -8ºC WB.
  - Dampers with spring for automatic closing in case of a tension cut. This is compulsory if the outdoor temperature is lower than -8ºC WB.
  - Electrical heater for antifreeze protection of dampers of mixing boxs. This is compulsory if the outdoor temperature is lower than -12ºC WB.
  - Circuit of the hot water coil with antifreeze protection according to the water temperature. This is compulsory if the outdoor temperature is lower than -20ºC WB.

- Corrosion
  - Coils (outdoor, indoor and/or auxiliary) with copper pipes and copper fins.
  - INERA® coils (outdoor, indoor and/or auxiliary) with copper pipes and fins of an aluminium alloy, of high performance and great resistance to the corrosion.
  - Coils (outdoor, indoor and / or auxiliary) with copper pipes and aluminium fins with polyurethane and Blygold® coating.
  - Condensate drain pan for the indoor circuit in stainless steel.

- Humidity
  - Stop-drop in the indoor air coil. Recommended in cases where a high moisture content in the air is foreseen or when the air flow is high.
  - Stop-drop in the outdoor air intake.
  - Tropicalised electric panel.
  - Tropicalised motors and fans (please consult).

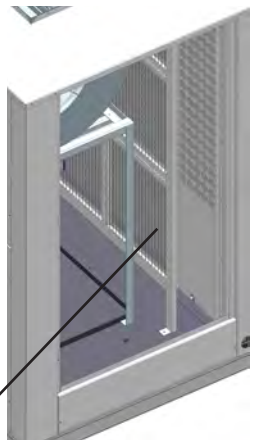

- Comfort / heating options
  - Hot water auxiliary coil, with three-way valve. This optional always incorporates an anti-freeze thermostat as safety system.
  - Auxiliary electrical heaters, with one or two stages with on/off control.

Note: electrical support is not available in models 90 to 180 with top supply and centrifugal fan (optional).

  - Natural or propane gas burner with modulating actuator. Available for all assemblies except top and bottom outlet. With this option, it is recommended to have the differential pressostat option for detecting clogged filters.

Note: with centrifugal fan (optional), it is compulsory the differential pressostat for controlling the air flow that stops the burner in case of fire.

Energy saving / recovery options

■ Free-cooling management

The operation of the unit in free-cooling allows the outdoor air conditions to be taken advantage of when these are more favourable than those of the return (or ambient) air. As such, this allows the cooling capacity to be reduced under these circumstances.

Note: the free-cooling function is not compatible with the activation of the recovery circuit.

The percentage of air refreshing will range from 0% to 100%.

There are three options for the free-cooling management:

- Thermal, with comparison of temperatures.
- Enthalpic, with comparison of enthalpies.
- Thermoenthalpic, with comparison of enthalpies and a correction for temperature.

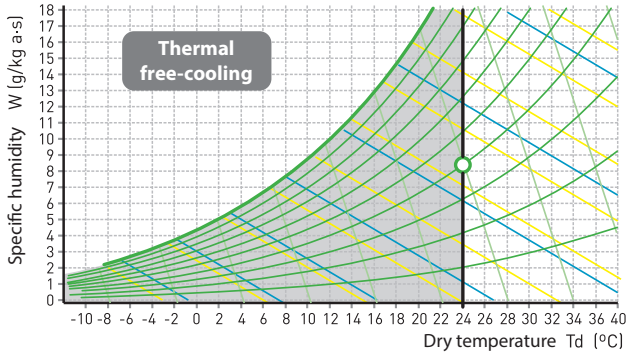

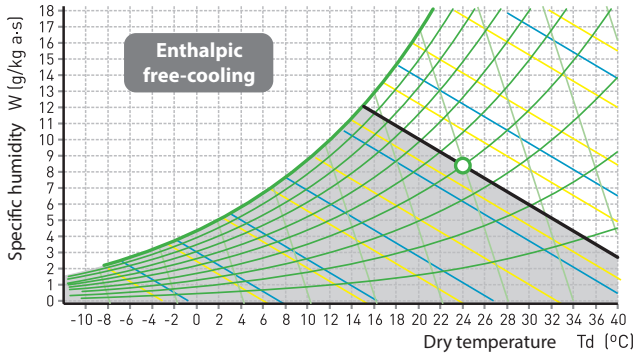

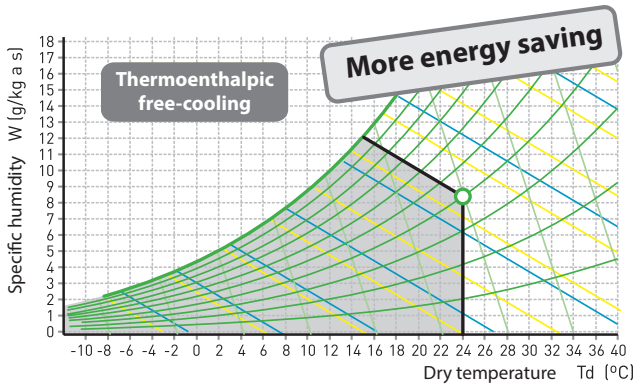

-

■ Active recovery

Circuit dedicated to recovery, with independent control, adapted to the air refreshing requirements in order to raise the COP and EER of the unit set.

- Centrifugal fan or electronic plug-fan in top box MRC0 or MRC1.
- Air circuit comprised of coils with copper pipes and aluminium fins.
- Thermostatic expansion valve with external equalisation.
- Hermetic scroll-type compressor with sound insulation, assembled over antivibration mounts.
- Crankcase heater.
- Four-way cycle reversing valve (heat pump units).
- Anti-acid dehydrator filter.
- Condensates drain pan.

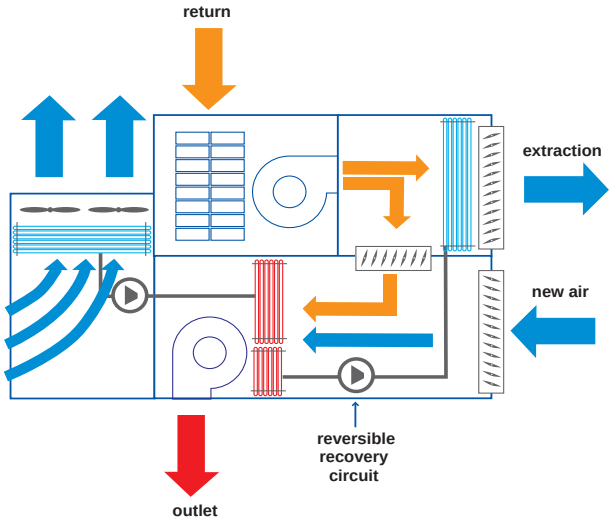

■ Safety options

- Soft starter of the supply and/or return centrifugal fans (optionals) which prolongs the set time mainly aimed at installations with cloth ducts. Compulsory for motors with an output of 15 kW and above.
- Differential pressostat for the detection of clogged filters.
- Differential pressostat for control of air flow, with centrifugal fan (optional).
- Smoke detecting station in accordance with the NF S 61-961 standard.
- Refrigerant leak detector. This allows prompt identification of gas leaks, guaranteeing the safety of any people in the vicinity. Installation of the device ensures compliance with European standards F-GAS and EN378 as well as ASHRAE 15.

- Comfort / indoor air quality options
  - Gravimetric filter G4.
  - Gravimetric filter G4 of low pressure drop.
  - Opacimetric folded filters F6 to F9 + gravimetric G4.
  - Opacimetric folded filters F7 and F9 of low pressure drop + G4 of low pressure drop.
  - Double stage creased opacimetric filters (F+F standard or F+F of low pressure drop). With this option, a technical consultation must be made due to changes in unit dimensions (models 90 to 180 with MS assembly and top return, models 200 to 360 with MS assembly and top or bottom return).

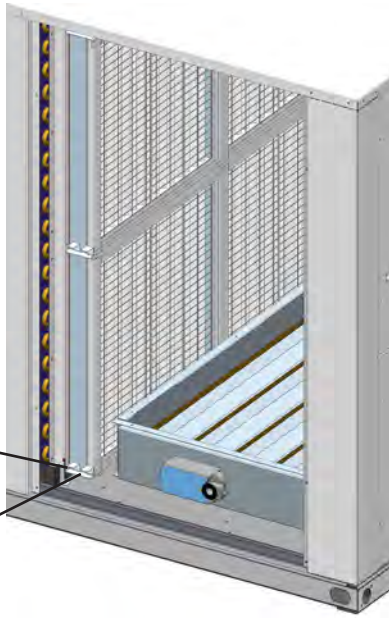

  - Air quality probe for installation in the environment to enable measuring CO_2 and/or volatile compounds.

- Packing options
  - Maritime packing SEI4C (with or without gas burner).
  - Skis for transporting in closed container (except with assemblies MC1 and MRC1).
- Installation options
  - Axial 2-speed outdoor fan(s) directly coupled to the motor. Watertight motor class F, IP54 and internal thermal protection. Dynamically balanced propellers and outdoor protective grille.
  - Supply and return centrifugal fan coupling by pulleys and belts. Electric motor(s) with tensioner, class F, IP55 and internal thermal protection. Turbines with an impeller of front-curved blades. Greased spherical bearings, with no maintenance required. Optionally, high available pressure.
  - Control of the overpressure with the MC0 and MC1 assemblies.
  - A single compressor instead of the tandem.
  - Compression latches of quarter-turn in filters and / or fans access panels.
  - Hinges + compression latches of quarter-turn in filters and / or fans access panels

  - Condensates drain pan for the outdoor circuit in galvanised steel (consult the change of dimension). This option is not available for models 200 to 360 when maritime transport by container is required.
  - Outdoor coil protection grille.
  - Outdoor coil antihail grille.
  - Standardised pre-assembly frames made of galvanised steel panelling, thermally insulated. Adjustable height.

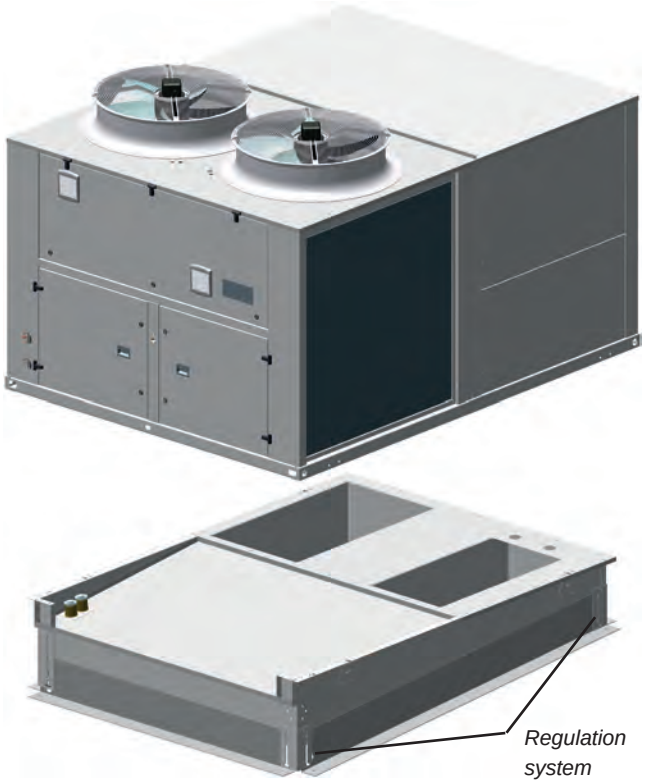

  - Adaptation frames for replacing units on site.

  - Antivibration mounts made of rubber.

- Service options
  - Commissioning and extension of guarantee of 1 year (with or without gas burner) in pieces, workforce and displacement.
  - Commissioning and extension of guarantee of 2 years (with or without gas burner) in pieces, workforce and displacement.
- Electric panel options
  - Electrical power supply with neutral.
  - Numeration of components in the electrical panel.
  - Numeration of wired.
  - Energy meter for monitoring of the power consumption of the installation.
- Control / communication options
  - TCO user terminal, for installation on the electric panel, instead of pGD1 terminal.
  - Kit remote control to 200 meters with pGD1 terminal (pGD1 terminal + 2 TCONN bypass cards). In this case it´s posible to install the TCO terminal on the electric panel.

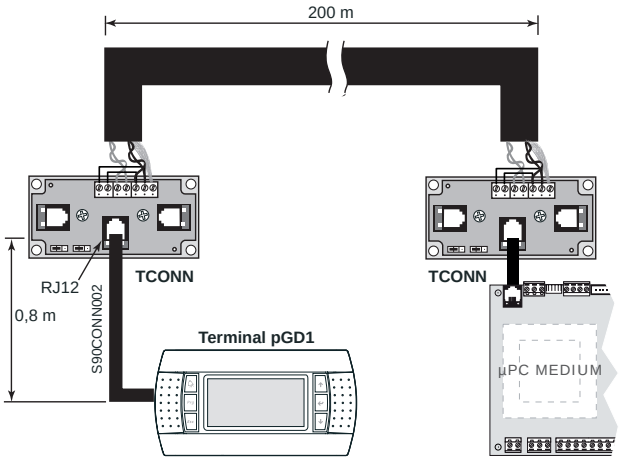

  - Relative humidity probes of return and outdoor air: compulsory in units with enthalpic or thermoenthalpic free-cooling.
  - Ambient air temperature probe: If the unit needs the relative humidity of the outdoor air probe (optional), this probe can't be installed on the board (standard), it must be connected to the Field-bus.
  - Ambient air enthalpy probe: compulsory in units with gas burner + enthalpic or thermoenthalpic free-cooling.
  - Change to CARRIERrtc basic electronic control with TCO terminal as standard and pGD1 terminal as optional (available for models 025 to 045): this control does not manage compressors in tandem or enthalpic / thermoenthalpic free-cooling or cooling recovery circuit or gas burner.
  - Change to CARRIERrtc medium electronic control with TCO terminal as standard and pGD1 terminal as optional (available for all models): this control does not manage cooling recovery circuit or gas burner.
- Communication
  - The controls CARRIERrtc (as standard) and CARRIERrtc basic & medium (optionals) allow the connection to a centralised technical management system by using a specific BMS card for some of the following communication protocols:
  - RS485 serial cards for network communication with protocols: Carel, Modbus, LonWorks®, BACnet™ MSTP, Konnex.
  - Ethernet pCO Web card for network communication with protocols: Modbus TCP/IP, BACnet™ Ethernet, TCP/IP, SNMP V1-2-3, FTP and HTTP.
- Supervision solutions

  Different solutions of supervision are available according to the dimensions of the installation.
  - pCO Web
    It is the solution for the management and supervision of a single unit if it incorporates the Ethernet pCO Web card.
  - PlantWatchPRO
    It is a solution designed for the monitoring of installations of medium - small dimensions, with ability to manage up to 10 units. Suitable for technical environments, it has no parts in movement.

  Includes: 5.7 " touch display, buzzer for notifications and 2 USB ports for downloading reports, charge devices models and applying service packs.

  In this case, each unit needs one RS485 Carel / Modbus board.
  - PlantVisorPRO2
    This is the solution for the management and supervision of air-conditioning installations with up to 300 units. It performs advanced monitoring and maintenance functions and enables creating areas and groups which simplify the management of the installation. It also allows the integration of energy meters for monitoring the power consumption of the installation.

  PlantVisorPRO2 is available in two versions:
  - Box: comprised of CPU and, optionally, by monitor and keyboard.
  - Touch: this includes CPU and touchscreen in the one device.

  In this case, each unit needs one RS485 Carel / Modbus board.

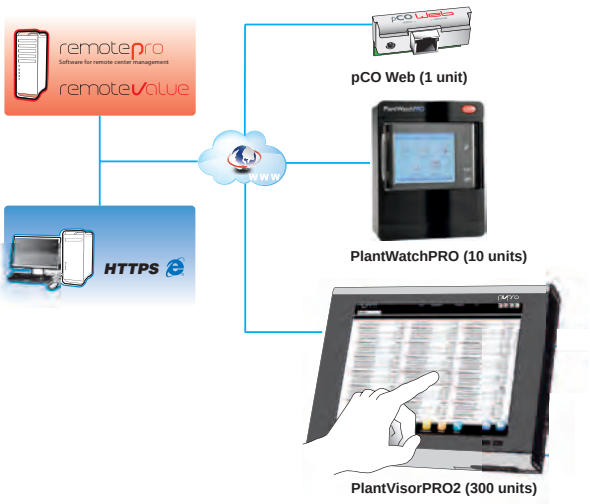

These systems allow the installation in remote management. Through a single connection to the Internet is accessed the information system. The Web interface, which is available for the local user, allows the monitoring and the complete configuration of the installation: from the office or any other user's current location.

For remote control of multiple sites, there are dedicated tools for centralized management as RemotePRO and RemoteValue.

Unit components

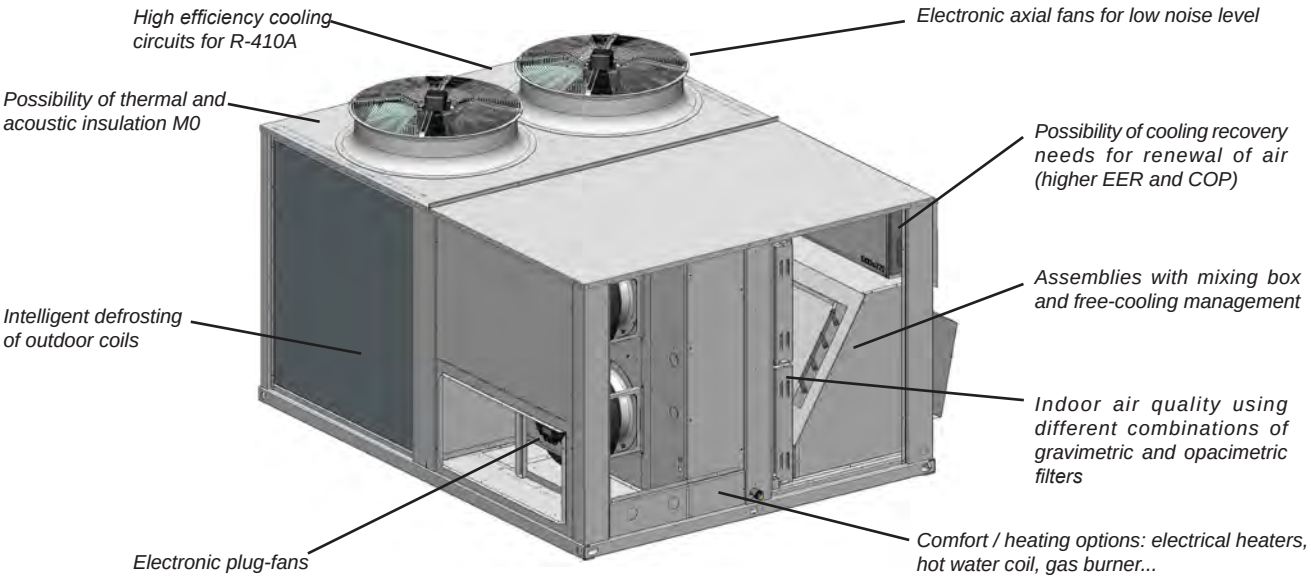

■ Casing
- Casing made of galvanised steel metal with polyester paint, white colour RAL 7035. Thermal insulation 9 mm thick, with fire classification M1.
- Self-supporting frame and access panels to the electric panel, compressors, fans, etc.

■ Outdoor circuit
- Electronic EC axial fan(s) that adapt the rotation speed to the installation requirements, thereby reducing electricity consumption, the sound level at partial charge and improving the average seasonal output of the unit.
- Coil with copper pipes and aluminium fins.

■ Indoor circuit
- Electronic plug-fans directly coupled with variable speed and flow sensor. Facilities type of service industries consumption of fans associated with air transportation assumes a high % of the annual consumption of air conditioning. The use of fans of greater efficiency has a direct impact on the reduction of consumption.
- Reusable air filters, assembled on a frame.
- Coil with copper pipes and aluminium fins.
- Condensates drain pan.
- Thermostatic expansion valve(s) with external equalisation.

■ Cooling circuit
- Hermetic scroll-type compressor in tandem design that improves the management of stages. Sound insulation, assembled over antivibration mounts. Control of phase equilibrium and the direction of rotation. Crankcase heaters.

- Four-way cycle reversing valves (heat pump units).
- Anti-acid dehydrating filter(s).
- Cooling design:
  - 1-air volume: models 90 to 180
  - 2-air volumes: models 240 to 360

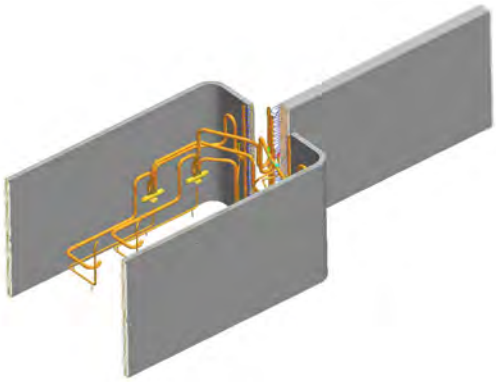

■ Protections
- High and low pressure pressostats.
- Compressor discharge temperature control.
- Non-return valve built into the compressor.
- Main door switch.
- Magnetothermic protection switches for the compressor(s) power line and fan motor.
- Automatic switch in the control circuit.

■ Electric panel
- Complete and fully wired electrical panel. Insulated panel cover to prevent condensation. Protection IP55.
- Forced ventilation of the electric panel.
- Transformer for power supply without neutral in electrical panel.
- Main ground connection.
- Compressor and fan motor contacts.

Controls

CARRIERrtc electronic control

The CARRIERrtc control is basically comprised of a µPC MEDIUM control board, a graphic terminal pGD1, a TCO user terminal (optional) and sensors.
This system has a field-bus RS485 that allows the management of additional components.
A BMS card allows the connection to a centralised technical management system.
It also manages a local connection between units through a pLAN network (µPC MEDIUM Local Area Network), thus allowing communication of data and information for a maximum of 15 units.

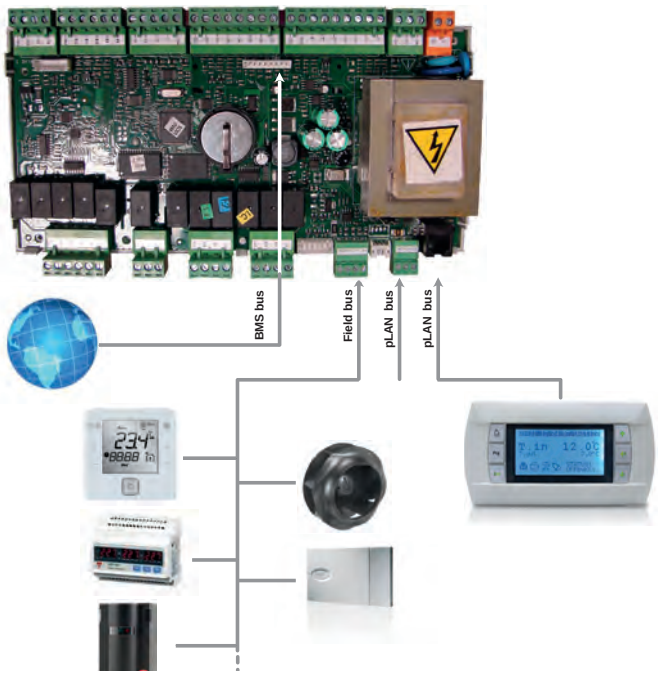

■ Main functions:
- Selection of the operating mode: HEATING / COOLING.
- Selection of the setpoint.
- Permanent control of the operating parameters.
- View of the values measured by the probes.
- Timing of the compressors
- Defrosting management (in heat pump units).
- Operation of all the seasons via the condensation and evaporation pressure control.
- Control of the outlet temperature.
- Compensation of the setpoint based on the outdoor temperature.
- Time and weekly schedule.
- Anti-fire safety device.
- Failure diagnosis and main alarm.

■ Optional functions:
This control allows controlling optional elements such as:
- Outdoor air damper for renewing air, depending on the temperature of the mixing air or depending on the air quality probe.
- Mixing box for thermal, enthalpic or thermoenthalpic free-cooling.
- Cooling recovery circuit for renewing the air.
- Auxiliary electrical heaters: one or two stages with on/off control or a stage with proportional control.
- Hot water coil with 3-way valve, with proportional or on/off control.
- Gas burner with one or two stages of proportional control.
- Humidifier with proportional or on/off control.
- Air flow controller (with centrifugal fans).
- Clogged filter detector.
- Smoke detection station.
- Refrigerant leak detector.
- Air quality probe for measuring CO_2 and/or volatile compounds.
- Energy meter.

■ pGD1 terminal:
This terminal, installed on the electric panel, allows:
- The initial programming of the unit.
- The modification of operating parameters.
- Unit ON / OFF.
- The selection of the operating mode.
- The setting of setpoints.
- On-screen display of controlled variables and sensor values measured.
- On-screen display of active alarms and historical record of alarms.

■ TCO user terminal (optional):
This terminal can be installed on the electric panel, instead of pGD1 terminal. In this case, the remote connection of the pGD1 terminal is posible. Please consult “Control options”.
TCO terminal allows:
- Unit ON / OFF.
- The selection of the operating mode.
- The setting of setpoints.
- The display of temperatures and humidity of the installation, outdoor temperature, outlet air temperature, CO_2 probe and opening of the outdoor damper.
- On-screen display of alarms codes.

Operating limits

Inlet air conditions		Cooling	Heating
Indoor coil	Minimum	13ºC WB	10ºC
	Maximum	24ºC WB	27ºC
Outdoor coil	Minimum	12ºC *	-12ºC WB **
	Maximum	48ºC	15ºC WB

* With a condensation pressure control operating down to -10ºC.

** When the outdoor temperature is usually below 5ºC WB it is recommended installing a support element.

Please consult your sales representative for drawings

50EN/EH

NEW

Nominal cooling capacity 92-281 kW
Nominal heating capacity 99-293 kW

Packaged unit all in one

High efficiency

Silent operation

Configuration flexibility

Optional plug-fans with EC motor

The 50EN/EH cooling units and heat pumps are autonomous air-air units with a compact monoblock, horizontal rooftop design.

They are equipped with centrifugal and axial fans, air coils, hermetic scroll compressors and electronic control with microprocessor, components optimised for the R-410A refrigerant.

These units have been designed for the air conditioning of large surface areas used for business or industry. They are quick to install and operate reliably. A vast number of options meet numerous operating demands.

All of the units are tested and checked in the factory.

50EN Series: Autonomous air-air cooling units with a compact horizontal rooftop construction.

50EH Series: Autonomous reversible air-air heat pump units with a compact horizontal rooftop construction.

Series 50EN/EH: 2 cooling circuits, 2 compressors, 6 models: 415 / 420 / 480 / 485 / 540 / 600

Series 50EN/EH: 2 cooling circuits, 4 compressors, 2 models: 650 / 720

Series 50EN/EH: 4 cooling circuits, 4 compressors, 4 models: 840 / 960 / 1100 / 1200.

Physical Data (EN-14511-2011)

50EN/EH		415	420	480	485	540	600
Cooling							
Cooling capacity *	kW	92,0	104,4	108,0	112,6	126,2	137,5
Power input ***	kW	33,8	30,3	38,0	34,5	39,6	45,4
EER performance		2,7	3,4	2,8	3,3	3,2	3,0
Heating							
Heating capacity **	kW	98,9	105,1	107,6	114,6	128,7	140,2
Power input ***	kW	28,5	28,3	32,1	32,4	35,5	38,6
COP performance		3,5	3,7	3,4	3,5	3,6	3,6
Outdoor circuit fan							
Nominal air flow	m^3/h	30.000	42.000	30.000	42.000	42.000	42.000
Available static pressure	mm.w.c	4					
Type		Axial					
Number		2					
Diameter	mm	2 x 800					
Output	kW	2 x 2,0 / 1,3					
Speed	r.p.m.	895 / 685					
Indoor circuit supply fan							
Nominal air flow	m^3/h	18.000	18.000	18.200	18.200	20.400	24.000
Available static pressure	mm.w.c	12,5	12,5	15,0	15,0	15,0	15,0
Type		Centrifugal					
Number / no. turbines	mm	2 / 2					
Motor output	kW	2 x 2,2	2 x 1,5	2 x 2,2	2 x 1,5	2 x 2,2	2 x 3
Power input	kW	2,72	2,04	2,94	2,18	2,88	4,06
Speed	r.p.m.	688	535	717	554	597	639
Compressor							
Type		Scroll					
Number of compressors		2					
Number of stages		2					
Number of circuits		2					
Oil type		Copeland 3MAF 32cST, Danfoss POE 160SZ, ICI Emkarate RL 32CF, Mobil EAL Artic 22CC					
Volume of oil	l	2 x 6,2	2 x 6,2	2 x 6,2	2 x 6,2	2 x 6,2	2 x 6,2
Electrical characteristics							
Electrical power supply		400 V / III ph / 50 Hz (±10%)					
Power supply		3 Wires + Ground					
Maximum absorbed current							
Compressor(s)	A	70,3	70,3	79,6	79,6	91,1	102,6
Outdoor fan(s)	A	8,6	8,6	8,6	8,6	8,6	8,6
Indoor fan	A	10,0	7,1	10,0	7,1	10,0	13,8
Control	A	1,8	1,8	1,8	1,8	1,8	1,8
Total	A	90,7	87,8	100,0	97,1	111,5	126,8
Refrigerant							
Type		R-410A					
Global warming potential (GWP) ****		2.088					
Charge	kg	30,0	30,0	30,0	30,0	34,0	35,0
Environment impact	tCO2eq	62,6	62,6	62,6	62,6	71,0	73,1
Dimensions							
Length	mm	3.326	4.816	3.326	4.816		
Width	mm	2.205	2.205	2.205	2.205		
Height	mm	2.095	1.795	2.095	1.795		
Weight	kg	1.541	1.788	1.581	1.830	1.879	1.937
Condensate outlet Ø		1 1/4" adaptor					

* Cooling capacity calculated in accordance with the EN-14511-2011 standard given for indoor temperature conditions 27ºC, (19ºC WB) and 35ºC outdoor temperature.
** Heating capacity calculated in accordance with the EN-14511-2011 standard given for indoor temperature conditions 20ºC and 6ºC WB outdoor temperature.
*** Total power input by compressors and motorised fans under nominal conditions, calculated in accordance with the EN-14511-2011 standard.
**** Climatic warming potential of a kilogram of fluorinated greenhouse gas in relation to a kilogram of carbon dioxide over a period of 100 years.

Physical Data (EN-14511-2011)

50EN/EH		650	720	840	960	1100	1200
Cooling							
Cooling capacity *	kW	152,1	168,7	199,9	218,9	257,5	280,8
Power input ***	kW	48,2	55,6	66,1	75,6	88,2	99,9
EER performance		3,2	3,0	3,0	2,9	2,9	2,8
Heating							
Heating capacity **	kW	158,9	177,1	207,7	230,1	267,6	293,1
Power input ***	kW	43,8	50,0	60,0	67,0	81,9	91,1
COP performance		3,6	3,5	3,5	3,4	3,3	3,2
Outdoor circuit fan							
Nominal air flow	m^3/h	55.000	56.000	75.000	75.000	112.500	112.500
Available static pressure	mm.w.c	4					
Type		Axial					
Number		4				6	
Diameter	mm	2 x 630 + 2 x 800		4 x 800		6 x 800	
Output	kW	2 x 0,7 / 0,4 + 2 x 2,0 / 1,3		4 x 2,0 / 1,3		6 x 2,0 / 1,3	
Speed	r.p.m.	875 / 650 895 / 685		895 / 685		895 / 685	
Indoor circuit supply fan							
Nominal air flow	m^3/h	27.500	30.000	33.000	37.000	42.000	46.000
Available static pressure	mm.w.c	17,5	17,5	17,5	17,5	17,5	17,5
Type		Centrifugal					
Number / no. turbines	mm	2 / 2		3 / 3		1 / 3	
Motor output	kW	2 x 4	2 x 4	3 x 3	3 x 3	18,5	22
Power input	kW	5,15	6,21	5,87	7,49	13,47	16,62
Speed	r.p.m.	654	677	677	714	873	916
Compressor							
Type		Scroll					
Number of compressors		4					
Number of stages		4					
Number of circuits		2		4			
Oil type		Copeland 3MAF 32cST, Danfoss POE 160SZ, ICI Emkarate RL 32CF, Mobil EAL Artic 22CC					
Volume of oil	l	4 x 3,3	4 x 6,2	4 x 6,2	4 x 6,2	4 x 6,2	4 x 6,2
Electrical characteristics							
Electrical power supply		400 V / III ph / 50 Hz (±10%)					
Power supply		3 Wires + Ground					
Maximum absorbed current							
Compressor(s)	A	100,4	122,0	140,6	159,2	182,2	205,2
Outdoor fan(s)	A	11,2	11,2	17,2	17,2	25,8	25,8
Indoor fan	A	18,0	18,0	20,7	20,7	37,0	42,0
Control	A	1,8	1,8	1,8	1,8	1,8	1,8
Total	A	131,4	153,0	180,3	198,9	246,8	274,8
Refrigerant							
Type		R-410A					
Global warming potential (GWP) ****		2.088					
Charge	kg	35,0	41,0	44,0	46,0	57,0	58,0
Environment impact	tCO2eq	73,1	85,6	91,9	96,0	119,0	121,1
Dimensions							
Length	mm	4.816				6.316	
Width	mm	2.205				2.205	
Height	mm	2.095				2.095	
Weight	kg	2.093	2.152	2.277	2.374	3.022	3.135
Condensate outlet Ø		1 1/4" adaptor					

* Cooling capacity calculated in accordance with the EN-14511-2011 standard given for indoor temperature conditions 27ºC, (19ºC WB) and 35ºC outdoor temperature.
** Heating capacity calculated in accordance with the EN-14511-2011 standard given for indoor temperature conditions 20ºC and 6ºC WB outdoor temperature.
*** Total power input by compressors and motorised fans under nominal conditions, calculated in accordance with the EN-14511-2011 standard.
**** Climatic warming potential of a kilogram of fluorinated greenhouse gas in relation to a kilogram of carbon dioxide over a period of 100 years..

Options

Configuration options (depending on the indoor air circulation)

Assembly	Legend
M w x y └ Air outlet (0 : standard, 1 : optional, 2 : optional) └ Air return (0 : standard, 1 : optional, 2 : optional) └ Type of assembly	I = Air outlet R = Air return N = New air inlet E = Air extraction

Standard assembly

■ M0 assembly: Change of outlet and/or return air position in the indoor circuit

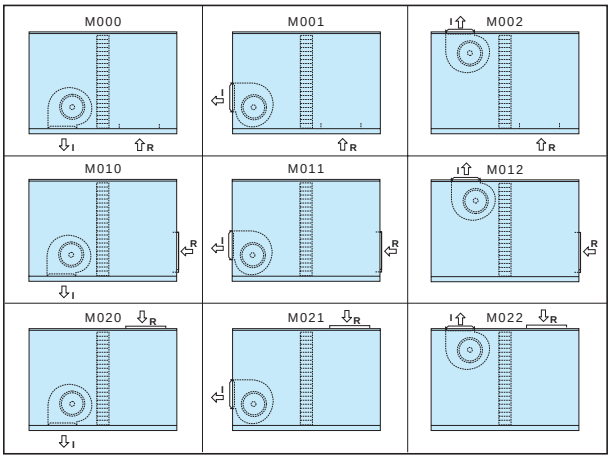

Assemblies with mixing box and free-cooling

■ MS assemblies: Outdoor air intake with damper, interlocked with return damper (mixing box of 2 dampers)

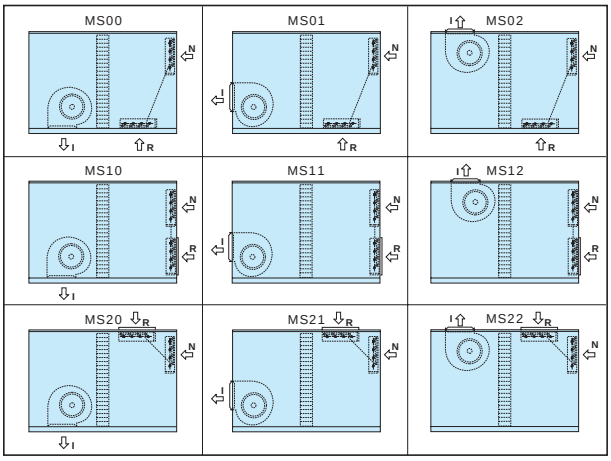

■ ME assemblies: Axial air extraction fan (mixing box of 3 dampers)

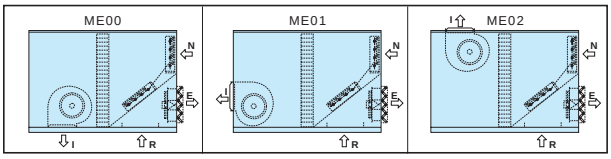

■ MA assemblies: Axial return and air extraction fan (mixing box of 3 dampers)

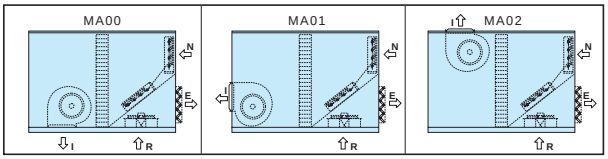

■ MC0 assemblies: Electronic lower plug-fan (mixing box of 3 dampers)

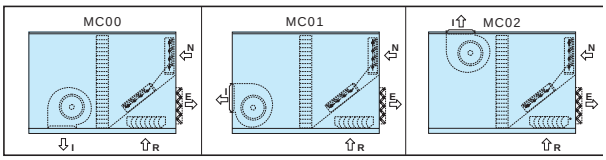

■ MRC0 assemblies: Electronic lower plug-fan (mixing box of 3 dampers) + cooling recovery circuit.

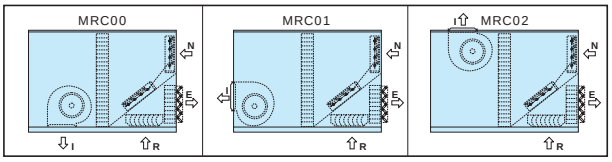

■ MC1 assemblies: Centrifugal fan or electronic plug-fan in top box (mixing box of 3 dampers)

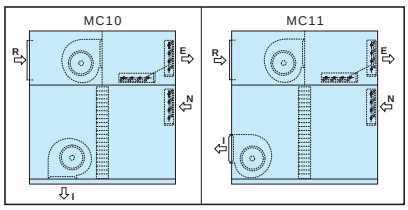

■ MRC1 assemblies: Centrifugal fan or electronic plug-fan in top box (mixing box of 3 dampers) + cooling recovery circuit

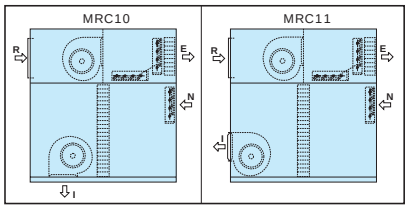

■ MWC1 assemblies (models 415 to 960): Centrifugal fan or electronic plug-fan in top box (mixing box of 3 dampers) + rotary recovery operator

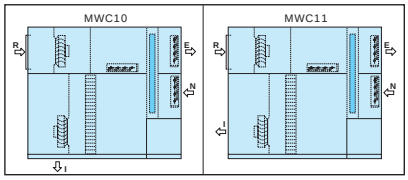

Outdoor ambient temperature options

- Temperature
  - Thermal and acoustic insulation 50 mm thick, with fire classification Euroclasse A2-s1, d0.

Cover loss:

Conditions	Winter	
Indoor	**20ºC**	**50% RH**
Outdoor	**-20ºC**	**94% RH**
9mm NBR (std)	1790 W	2.0% HC
50mm rock wool	437 W	0.4% HC

Conditions	Summer	
Indoor	**27ºC**	**50% RH**
Outdoor	**35ºC**	**40% RH**
9mm NBR (std)	615 W	1.00% TCC
50mm rock wool	151 W	0.24% TCC

  - Electrical heater for protection of the components of the electric panel. This is compulsory if the outdoor temperature is lower than -8ºC WB. With an outdoor temperature ower than -16ºC WB will be compulsory a reinforced resistance.
  - Compressor with protection for low temperature (supplementary crankcase heater). This is compulsory if the outdoor temperature is lower than -8ºC WB.
  - Dampers with spring for automatic closing in case of a tension cut. This is compulsory if the outdoor temperature is lower than -8ºC WB.
  - Electrical heater for antifreeze protection of dampers of mixing boxs. This is compulsory if the outdoor temperature is lower than -12ºC WB.
  - Circuit of the hot water coil with antifreeze protection according to the water temperature. This is compulsory if the outdoor temperature is lower than -20ºC WB.

- Corrosion
  - Coils (outdoor, indoor and/or auxiliary) with copper pipes and copper fins.
  - INERA® coils (outdoor, indoor and/or auxiliary) with copper pipes and fins of an aluminium alloy, of high performance and great resistance to the corrosion.
  - Coils (outdoor, indoor and/or auxiliary) with copper pipes and aluminium fins with polyurethane and blygold® coating.
  - Condensate drain pan for the indoor circuit in stainless steel.

- Humidity
  - Stop-drop in the indoor air coil (optional from model 415 to 960 and included in models 1100 and1200).
  - Recommended in cases where a high moisture content in the air is foreseen or when the air flow is high.
  - Stop-drop in the outdoor air intake.
  - Tropicalised electric panel.
  - Tropicalised motors and fans (please consult).

Indoor stop-drop

- Comfort / heating options
  - Hot water auxiliary coil, with three-way valve. This optional always incorporates an anti-freeze thermostat as safety system.
  - Auxiliary electrical heaters. With this option, the air flow controller is compulsory to be selected.

    Nevertheless, if the unit with electrical heaters incorporates supply plug-fan, it is not possible to select the optional the air flow controller, since the proper fan realizes this function.
  - Natural or propane gas burner with modulating actuator, except models 415 and 480. Available for all assemblies except top and bottom outlet. With this option, it is compulsory the differential pressostat for controlling the air flow that stops the burner in case of fire. It is also recommended to have the differential pressostat option for detecting clogged filters.

    In case of units with gas burner and supply plug-fan it is not possible to select the pressostat for the air flow controller, since the proper fan realizes this function.

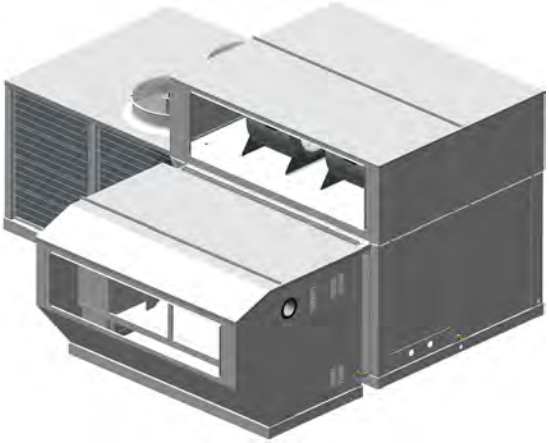

Energy saving / recovery options

- Compressors in tandem
  - This setting improves the management of stages, and therefore the energy efficiency of the unit (models 415 to 600). Models 650 and 720 in tandem as standard.

- Electronic EC axial fans in the outdoor circuit
  - These fans adapt their rotation speed to the installation requirements, thereby reducing electricity consumption, the sound level at partial charge and improving the average seasonal output of the unit.

- Plug-fan
  - Electronic plug-fans in outlet and/or return with variable speed and flow sensor. Consult dimensions schemes with optional supply plug-fan.

    Facilities type of service industries consumption of fans associated with air transportation assumes a high % of the annual consumption of air conditioning. The use of fans of greater efficiency has a direct impact on the reduction of consumption. Plug-fans with variable speed have associated the following advantages:
    - Elimination of friction loss of the transmission by direct link.
    - Greater efficiency aeraulics of the rotor (impeller jet with optimized profile), with very high available pressure.
    - Greater efficiency of the motor, DC motors of permanent magnets powered by electronic switching integrated in the motor.
    - Variable speed that allows to keep the outlet flow constant regardless of the degree of clogging of filters.
    - Accurate measurement of flow, a section calibrated in the fan aspiration and a differential pressure sensor allow control handling flow reliably both on VAC as VAV systems.

- Free-cooling management

The operation of the unit in free-cooling allows the outdoor air conditions to be taken advantage of when these are more favourable than those of the return (or ambient) air. As such, this allows the cooling capacity to be reduced under these circumstances.

- The percentage of air refreshing will range from 0% to 100%.
- There are three options for the free-cooling management:
- Thermal, with comparison of temperatures.
- Enthalpic, with comparison of enthalpies.
- Thermoenthalpic, with comparison of enthalpies and a correction for temperature.

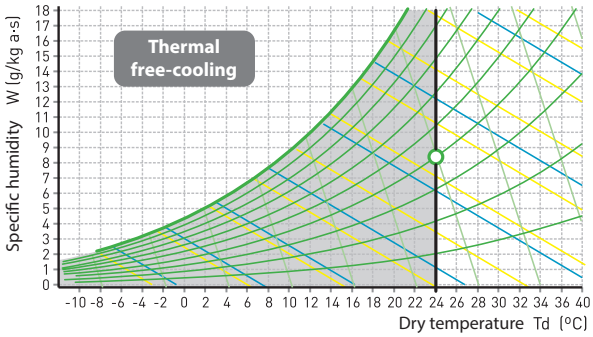

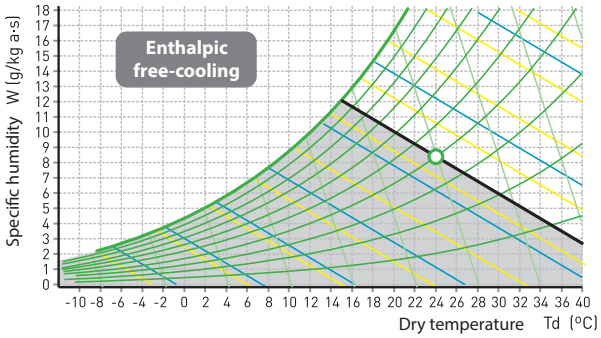

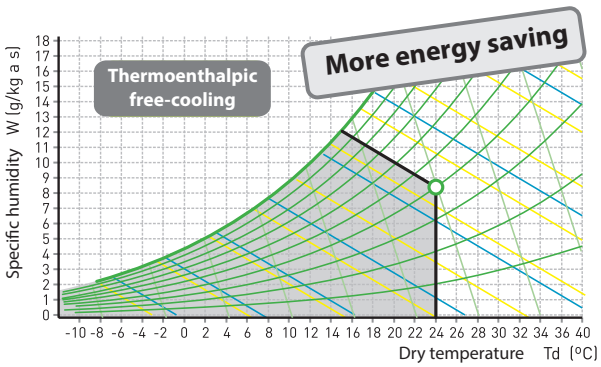

- Active recovery
  - Circuit dedicated to recovery, with independent control, adapted to the air refreshing requirements in order to raise the COP and EER of the unit set.
    - Centrifugal fan in top box MRC1 or electronic lower plug-fan MRC0.
    - Air circuit comprised of coils with copper pipes and aluminium fins.
    - Thermostatic expansion valve with external equalisation.
    - Hermetic scroll-type compressor with sound insulation, assembled over antivibration mounts.
    - Crankcase heater.
    - Four-way cycle reversing valve (heat pump units).
    - Anti-acid dehydrator filter.
    - Condensates drain pan.

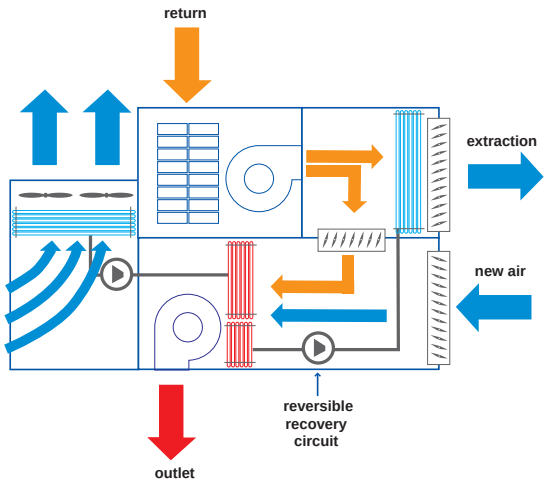

- Passive recovery
  - Rotating heat exchanger in a module attached to the machine, with electronic plug-fans for supply and/or return (MWC1 assembly). Available for models 415 to 960.
  - This wheel recovery allows to transfer heat and humidity of the return air from the conditioned premises to the take in air, before to expel it outdoor. This support for free-cooling reduces the operating time of the machine, with the consequent energy saving and benefit to the environment.

- Comfort / indoor air quality options
  - Gravimetric filter G4.
  - Gravimetric filter G4 of low pressure drop.
  - Opacimetric folded filters F6 to F9 + gravimetric G4.
  - Opacimetric folded filters F7 and F9 of low pressure drop + G4 of low pressure drop.
  - Double stage creased opacimetric filters (F+F standard or F+F of low pressure drop). With this option, a technical consultation must be made due to changes in unit dimensions (with MS assembly and top or bottom return).

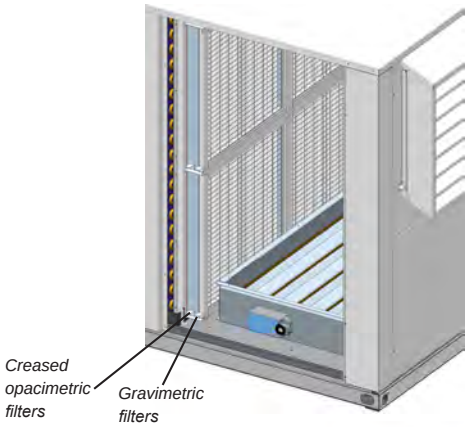

  - Air quality probe for installation in the environment to enable measuring CO_2 and/or volatile compounds.

- Installation options
  - Supply and/or return fan with high available pressure.
  - Control of the overpressure with the MC0 and MC1 assemblies.
  - Condensates drain pan for the outdoor circuit in galvanised steel (consult dimensions drawing). This option is not available when maritime transport by container is required.

  - Outdoor coil protection grille.
  - Outdoor coil antihail grille.
  - Compression latches of quarter-turn in filters and / or fans access panels.
  - Hinges + compression latches of quarter-turn in filters and / or fans access panels.
  - Standardised pre-assembly frames made of galvanised steel panelling, thermally insulated. Adjustable height.
  - Adaptation frames for replacing units on site.

  - Antivibration mounts made of rubber

- Safety options
  - Soft starter of the supply and/or return centrifugal fan which prolongs the set time mainly aimed at installations with cloth ducts. Compulsory for motors with an output of 15 kW and above.
  - Differential pressostat for the detection of clogged filters.
  - Differential pressostat for control of air flow.
  - Smoke detecting station in accordance with the NF S 61-961 standard.
  - Refrigerant leak detector. This allows prompt identification of gas leaks, guaranteeing the safety of any people in the vicinity. Installation of the device ensures compliance with European standards F-GAS and EN378 as well as ASHRAE 15.

- Packing options
  - Maritime packing SEI4C (with or without gas burner).
  - Skis for transporting in closed container (except with assemblies MC1 and MRC1).
- Service options
  - Commissioning and extension of guarantee of 1 year (with or without gas burner) in pieces, workforce and displacement.
  - Commissioning and extension of guarantee of 2 years (with or without gas burner) in pieces, workforce and displacement.
- Electric panel options
  - Electrical power supply with neutral.
  - Numeration of components in the electrical panel.
  - Numeration of wired.
  - Energy meter for monitoring of the power consumption of the installation.
- Control / communication options
  - TCO user terminal, for installation on the electric panel, instead of pGD1 terminal.
  - Kit remote control to 200 meters with pGD1 terminal (pGD1 terminal + 2 TCONN bypass cards). In this case it´s posible to install the TCO terminal on the electric panel.

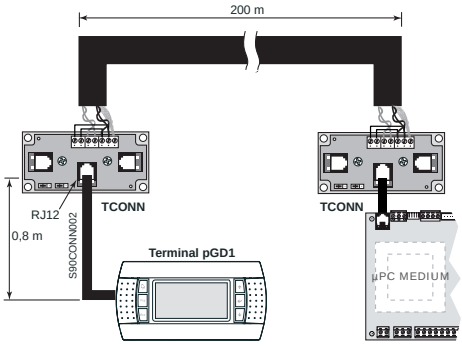

  - Relative humidity probes of return and outdoor air: compulsory in units with enthalpic or thermoenthalpic free-cooling.
  - Ambient air temperature probe: If the unit needs the relative humidity of the outdoor air probe (optional), this probe can't be installed on the board (standard), it must be connected to the Field-bus.
  - Ambient air enthalpy probe: compulsory in units with gas burner + enthalpic or thermoenthalpic free-cooling.
  - Change to CARRIERrtc medium electronic control with TCO terminal as standard and pGD1 terminal as optional (available for models 415 to 720): this control does not manage cooling recovery circuit, passive recovery or gas burner.
  - Communication

CARRIERrtc & CARRIERrtc medium controls allow the connection to a centralised technical management system by using a specific BMS card for some of the following communication protocols:

- RS485 serial cards for network communication with protocols: Carel, Modbus, LonWorks®, BACnetTM MSTP, Konnex.
- Ethernet pCO Web card for network communication with protocols: Modbus TCP/IP, BACnetTM Ethernet, TCP/IP, SNMP V1-2-3, FTP and HTTP.

- Supervision solutions

Different solutions of supervision are available according to the dimensions of the installation.

- pCO Web

It is the solution for the management and supervision of a single unit if it incorporates the Ethernet pCO Web card.

- PlantWatchPRO

It is a solution designed for the monitoring of installations of medium - small dimensions, with ability to manage up to 10 units. Suitable for technical environments, it has no parts in movement.

Includes: 5.7 " touch display, buzzer for notifications and 2 USB ports for downloading reports, charge devices models and applying service packs.

In this case, each unit needs one RS485 Carel / Modbus board.

- PlantVisorPRO2

This is the solution for the management and supervision of air-conditioning installations with up to 300 units.
It performs advanced monitoring and maintenance functions and enables creating areas and groups which simplify the management of the installation. It also allows the integration of energy meters for monitoring the power consumption of the installation.

PlantVisorPRO2 is available in two versions:

- Box: comprised of the CPU unit and, optionally, by monitor and keyboard.
- Touch: this includes the CPU and the touchscreen in the one device.

In this case, each unit needs one RS485 Carel / Modbus board.

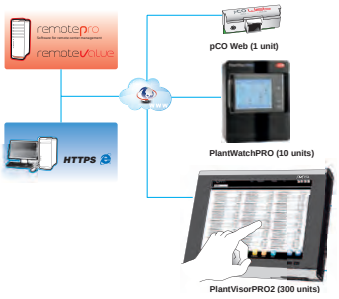

These systems allow the installation in remote management. Through a single connection to the Internet is accessed the information system. The Web interface, which is available for the local user, allows the monitoring and the complete configuration of the installation: from the office or any other user's current location.

For remote control of multiple sites, there are dedicated tools for centralized management as RemotePRO and RemoteValue.

Unit components

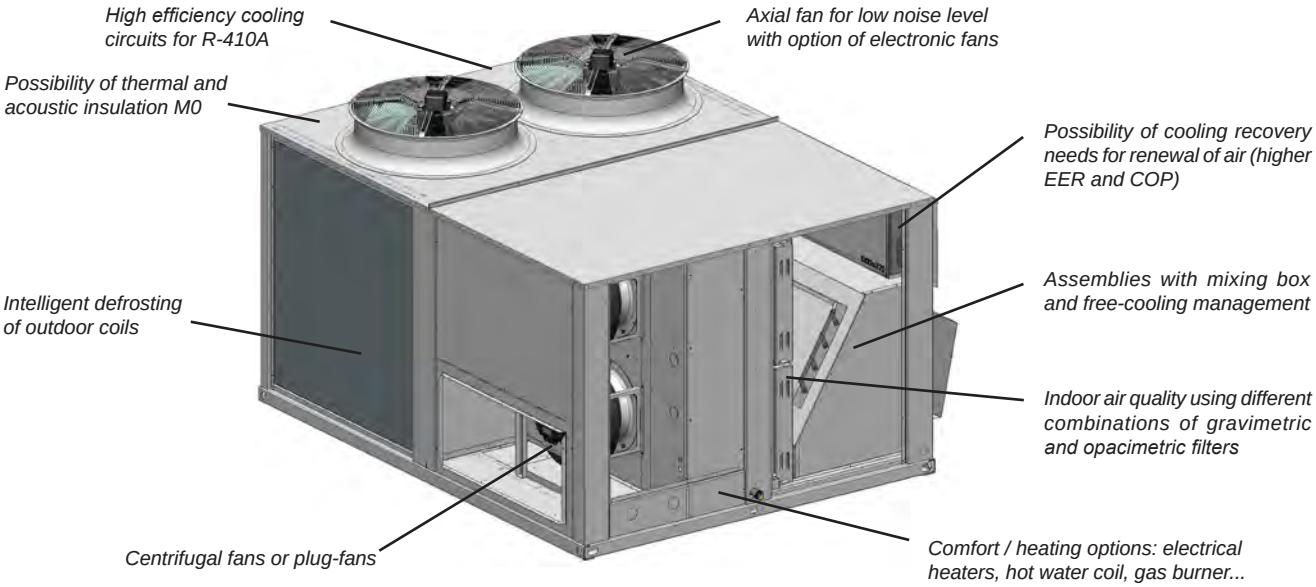

- Casing
  - Casing made of galvanised steel metal with polyester paint, white colour RAL 7035. Thermal insulation 9 mm thick, with fire classification M1.
  - Self-supporting frame and access panels to the electric panel, compressors, fans, etc.
- Outdoor circuit
  - Axial 2-speed fans directly coupled to the motor. Watertight motor class F, IP54 and internal thermal protection. Dynamically balanced propellers and outdoor protective grille.
  - Coil with copper pipes and aluminium fins.
- Indoor circuit
  - Centrifugal fans coupling by pulleys and belts. Electric motor with tensioner, class F, IP55 and internal thermal protection. One, two or three double-intake turbines, with an impeller of front-curved blades. Greased spherical bearings, with no maintenance required.
  - Reusable air filters, assembled on a frame.
  - Coil with copper pipes and aluminium fins.
  - Condensates drain pan.
  - Thermostatic expansion valves with external equalisation.
- Cooling circuit
  - Hermetic scroll-type compressors with sound insulation, assembled over antivibration mounts. Control of phase equilibrium and the direction of rotation.
  - Crankcase heater.
  - Four-way cycle reversing valves (heat pump units).
  - Anti-acid dehydrating filters.
  - Cooling design based on 2-air volumes.

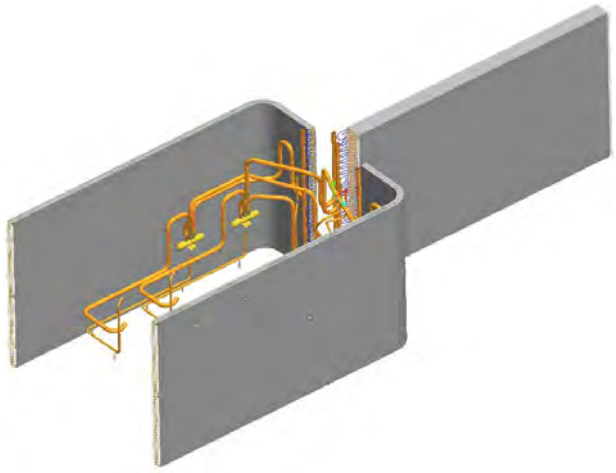

- Protections
  - High and low pressure pressostats.
  - Compressor discharge temperature control.
  - Non-return valve built into the compressor.
  - Main door switch.
  - Magnetothermic protection switches for the compressor(s) power line and fan motor.
  - Automatic switch in the control circuit.
- Electric panel
  - Complete and fully wired electrical panel. Insulated panel cover to prevent condensation. Protection IP55.
  - Forced ventilation of the electric panel.
  - Transformer for power supply without neutral in electrical panel.
  - Main ground connection.
  - Compressor and fan motor contacts.

Controls

CARRIERrtc electronic control

The CARRIERrtc control is basically comprised of a µPC MEDIUM control board, a graphic terminal pGD1, a TCO user terminal (optional) and sensors.

This system has a field-bus RS485 that allows the management of additional components.

A BMS card allows the connection to a centralised technical management system.

It also manages a local connection between units through a pLAN network (µPC MEDIUM Local Area Network), thus allowing communication of data and information for a maximum of 15 units.

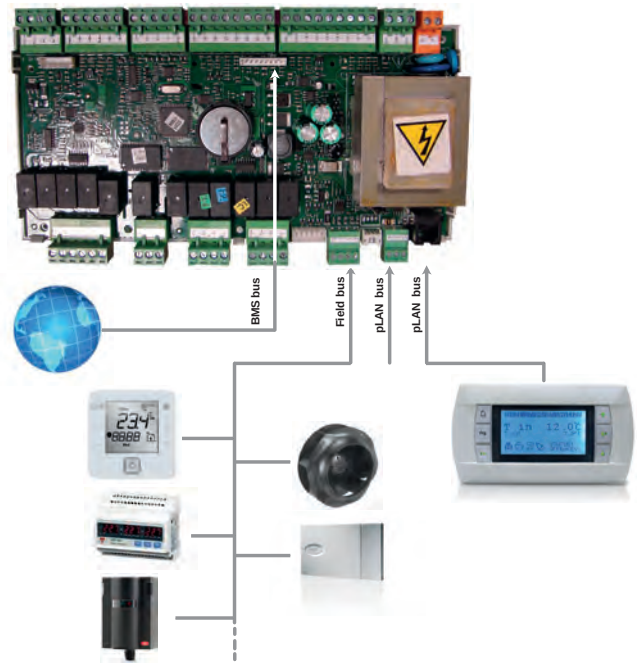

- Main functions:
  - Selection of the operating mode: heating / cooling.
  - Selection of the setpoint.
  - Permanent control of the operating parameters.
  - View of the values measured by the probes.
  - Timing of the compressors
  - Defrosting management (in heat pump units).
  - Operation in all seasons via the condensation and evaporation pressure control.
  - Control of the outlet temperature.
  - Compensation of the setpoint based on the outdoor temperature.
  - Time and weekly schedule.
  - Anti-fire safety device.
  - Failure diagnosis and main alarm.

- Optional functions:

  This control allows controlling optional elements such as:
  - Electronic outdoor fans.
  - Supply and return electronic plug-fans.
  - Outdoor air damper for renewing air, depending on the temperature of the mixing air or depending on the air quality probe.
  - Mixing box for thermal, enthalpic or thermoenthalpic free-cooling.
  - Cooling recovery circuit for renewing the air.
  - Rotary recovery operator.
  - Auxiliary electrical heaters: one or two stages with on/off control or a stage with proportional control.
  - Hot water coil with 3-way valve, with proportional or on/off control.
  - Gas burner with one or two stages of proportional control.
  - Humidifier with proportional or on/off control.
  - Air flow controller (with centrifugal fans).
  - Clogged filter detector.
  - Smoke detection station.
  - Refrigerant leak detector.
  - Air quality probe for measuring CO_2 and/or volatile compounds.
  - Energy meter.

- pGD1 terminal:

  This terminal, installed on the electric panel, allows:
  - The initial programming of the unit.
  - The modification of operating parameters.
  - Unit ON / OFF.
  - The selection of the operating mode.
  - The setting of setpoints.
  - On-screen display of controlled variables and sensor values measured.
  - On-screen display of active alarms and historical record of alarms.

- TCO user terminal (optional):

  This terminal can be installed on the electric panel, instead of pGD1 terminal. In this case, the remote connection of the pGD1 terminal is posible. Please consult “Control options”.

  TCO terminal allows:
  - Unit ON / OFF.
  - The selection of the operating mode.
  - The setting of setpoints.
  - The display of temperatures and humidity of the installation, outdoor temperature, outlet air temperature, CO2 probe and opening of the outdoor damper.
  - On-screen display of alarms codes.

Sound levels dB(A)

Standard unit

Sound power level

50EN/EH	415	420	480	485	540	600	650	720	840	960	1100	1200
Total dB(A)	91	93	92	94	94	95	95	95	97	98	99	100

Sound pressure level

Measurement conditions: in a clear field, measured at a distance of 5 metres, directivity 2 and at 1,5 metres from the ground.

50EN/EH	415	420	480	485	540	600	650	720	840	960	1100	1200
Total dB(A)	64	66	65	67	67	67	67	67	70	70	71	72

Note: The sound pressure level depends on the installation conditions and, as such, it only indicated as a guide. Values obtained according to the ISO 3744 standard.

Operating limits

Inlet air conditions		Cooling	Heating
Indoor coil	Minimum	13ºC WB	10ºC
	Maximum	24ºC WB	27ºC
Outdoor coil	Minimum	12ºC*	-12ºC WB**
	Maximum	48ºC	15ºC WB

* With a condensation pressure control operating down to -10ºC.
** When the outdoor temperature is usually below 5ºC WB it is recommended installing a support element.

Please consult your sales representative for drawings

48EN/EH

NEW

Packaged unit all in one

Built in gas burner

Silent operation

Easy installation and maintenance

High efficiency

The 48EN/EH cooling units and heat pumps are autonomous air-air units with a compact monoblock, horizontal rooftop design with a built in natural or propane gas burner (in accordance with the gas Directive 90/396 EEC).

They are equipped with centrifugal and axial fans, air coils, hermetic scroll compressors and electronic control with microprocessor, components optimised for the R-410A refrigerant.

These units have been designed for the air conditioning of large surface areas used for business or industry in areas with particularly low outdoor temperatures in winter.

A vast number of options meet numerous operating demands thus enabling quick installation and reliable operation.

All of the units are tested and checked in the factory.

Series 48EN/EH: 2 cooling circuits, 2 compressors, 10 models: 241 / 321 / 361 / 242 / 322 / 362 / 420 / 485 / 540 / 600

48EN Series: Autonomous air-air cooling units with a compact horizontal rooftop design with a built in gas burner.

48EH Series: Autonomous reversible air-air heat pump units with a compact horizontal rooftop design with a built in gas burner.

Physical data

48EN/EH		241	321	361	242	322	362	420	485	540	600
Cooling											
Cooling capacity *	kW	58,9	72,1	82,7	60,3	73,6	84,8	101,7	110,3	123,3	135,5
Power input***	kW	21,4	28,1	32,7	21,1	27,5	32,0	33,0	37,0	42,8	49,8
EER performance		2,7	2,6	2,5	2,9	2,7	2,6	3,1	3,0	2,9	2,7
Heating											
Heating capacity **	kW	62,2	76,7	92,3	62,2	76,1	91,6	105,5	115,5	129,0	143,4
Power input ***	kW	18,2	21,8	26,6	17,4	20,9	25,5	31,2	35,3	39,1	43,6
COP performance		3,4	3,5	3,5	3,6	3,6	3,6	3,4	3,3	3,3	3,3
Outdoor circuit fan											
Nominal air flow	m^3/h	30.000						42.000			
Available static pressure	mm.w.c	4									
Type		Axial									
Number		2						4			
Diameter	mm	2 x 800						2 x 630 + 2 x 800			
Output	kW	2 x 2,0 / 1,3						2 x 0,7 / 0,4 + 2 x 2,0 / 1,3			
Speed	r.p.m.	895 / 685						875 / 650 895 / 685			
Indoor circuit supply fan											
Nominal air flow	m^3/h	12.000	14.300	15.900	12.000	14.300	15.900	18.000	18.200	20.400	24.000
Available static pressure	mm.w.c	12	12	12	12	12	12	12	12	15	15
Type		Centrifugal									
Number / no. turbines		2 / 2									
Motor output	kW	2 x 1,5	2 x 2,2	2 x 3	2 x 1,1	2 x 2,2	2 x 2,2	2 x 2,2	2 x 2,2	2 x 3	2 x 4
Power input	kW	2 x 1,13	2 x 1,67	2 x 2,11	2 x 0,93	2 x 1,35	2 x 1,68	2 x 1,70	2 x 1,74	2 x 2,40	2 x 3,42
Speed	r.p.m.	847	939	995	762	829	870	708	713	790	860
Compressor											
Type		Scroll									
Number of compressors		2									
Number of circuits		2									
Number stages		2									
Oil type		Copeland 3MAF 32cST, Danfoss POE 160SZ, ICI Emkarate RL 32CF, Mobil EAL Artic 22CC									
Volume of oil	l	2 x 3,3	2 x 3,3	2 x 6,2	2 x 3,3	2 x 3,3	2 x 6,2	2 x 6,2	2 x 6,2	2 x 6,2	2 x 6,2
Gas burner											
Gas type		Natural or propane									
Standard model		PCH-72			PCH-200						
Max. heating capacity	kW	73			197						
Pressure drop	mm.w.c	11,4	16,2	20,0	5,7	8,1	10,0	12,8	13,1	16,5	22,8
Electrical features											
Electrical power supply		400 V / III ph / 50 Hz (±10%)									
Power supply		3 Wires + Ground									
Maximum absorbed current											
Compressor(s)	A	58,0	70,0	72,0	58,0	70,0	72,0	87,0	102,0	116,0	130,0
Outdoor fan(s)	A	8,6	8,6	8,6	8,6	8,6	8,6	11,2	11,2	11,2	11,2
Indoor fan	A	7,2	10,0	13,8	5,4	10,0	10,0	10,0	10,0	13,8	18,0
Control	A	2,0	2,0	2,0	2,0	2,0	2,0	2,0	2,0	2,0	2,0
Total	A	75,8	90,6	96,4	74,0	90,6	92,6	110,2	125,2	143,0	161,2
Refrigerant											
Type		R-410A									
Global warming potential (GWP) ****		2.088									
Charge	kg	18,4	19,8	27,0	18,8	20,1	27,4	42,5	42,4	51,0	51,0
Environment impact	tCO2eq	38,4	41,3	56,4	39,3	42,0	57,2	88,7	88,5	106,5	106,5
Dimensions											
Length	mm	3.326			3.926			4.816			
Width	mm	2.205			2.205			2.205			
Height	mm	2.095			2.095			2.095			
Weight	kg	1.497	1.581	1.717	1.723	1.806	1.942	2.360	2.402	2.459	2.512
Condensate outlet Ø		1 1/4" adaptor									

* Cooling capacity calculated in accordance with the EN-14511 standard given for indoor temperature conditions 27ºC, 50% RH and 35ºC outdoor temperature.
** Heating capacity calculated in accordance with the EN-14511 standard given for indoor temperature conditions 20ºC and 6ºC WB outdoor temperature.
*** Total power input by compressors and motorised fans under nominal conditions, calculated in accordance with the EN-14511 standard.
**** Climatic warming potential of a kilogram of fluorinated greenhouse gas in relation to a kilogram of carbon dioxide over a period of 100 years.

Range of burners

48EN/EH		241	321	361	242	322	362	420	485	540	600
Heating capacties (kW) with «Available gas burners»	**PCH-43**	47 *			-	-	-	47 *			
	PCH-54	58 *			-	-	-	58 *			
	PCH-72	73 **			-	-	-	73 *			
	PCH-92	-	-	-	93 *						
	PCH-150	-	-	-	145 *						
	PCH-200	-	-	-	197 **						

*Optional
**Standard

Characteristics of the gas burner

Gas burner models		PCH-43		PCH-54		PCH-72	
		min.	max.	min.	max.	min.	max.
EC Mark	PIN	0694BM3433					
Nominal heat capacity	kW	14,8	47,5	15,5	58,0	22,0	78,0
Nominal heat output	kW	15,5	44,8	16,3	54,0	23,1	73,2
Performance	%	105,0	94,3	105,0	93,1	105,0	93,8
Air flow	m^3/h	2.600	8.000	3.100	9.500	4.200	13.500
Motor output	kW	0,07		0,09		2 x 0,09	
Maximum pressure applicable	mm.w.c	60					
Ø aspiration/discharge pipe	mm	80/80		80/80		100/100	
Available outlet pressure for smoke	mm.w.c	12		12		12	
G20 methane supply pressure	mm.w.c	200					
Consumption G20 (15ºC 10,13 m.a.c.)	m^3/h	1,57	5,03	1,64	6,14	2,66	9,45
G25 methane supply pressure	mm.w.c	250					
Consumption G25 (15ºC 10,13 m.a.c.)	m^3/h	1,79	5,75	1,88	7,03	2,66	9,45
G30 methane supply pressure	mm.w.c	300					
Consumption G30 (15ºC 10,13 m.a.c.)	kg/h	0,95	3,05	0,99	3,72	1,41	5,00
G31 propane supply pressure	mm.w.c	370					
Consumption G31 (15ºC 10,13 m.a.c.)	kg/h	0,94	3,00	0,98	3,67	1,39	4,93
Power supply voltage		230 V / I ph / 50 Hz					
Index of protection (IP)		IP4xD					
Inlet temperature limit	ºC	+60ºC to -15ºC					

Gas burner models		PCH-92		PCH-150		PCH-200	
		min.	max.	min.	max.	min.	max.
EC Mark	PIN	0694BM3433					
Nominal heat capacity	kW	30,0	98,0	44,0	155,0	53,0	215,0
Nominal heat output	kW	31,5	93,4	46,3	145,0	55,7	197,0
Performance	%	105,0	95,3	105,2	93,5	105,1	91,6
Air flow	m^3/h	5.400	16.500	8.500	40.000	11.500	40.000
Motor output	kW	2 x 0,07		0,4		0,4	
Maximum pressure applicable	mm.w.c	60					
Ø aspiration/discharge pipe	mm	100/100		130/130		130/130	
Available outlet pressure for smoke	mm.w.c	12		10		14	
G20 methane supply pressure	mm.w.c	200					
Consumption G20 (15ºC 10,13 m.a.c.)	m^3/h	3,18	10,37	4,66	16,40	5,61	22,75
G25 methane supply pressure	mm.w.c	250					
Consumption G25 (15ºC 10,13 m.a.c.)	m^3/h	3,63	11,87	5,41	19,07	6,52	26,45
G30 methane supply pressure	mm.w.c	300					
Consumption G30 (15ºC 10,13 m.a.c.)	kg/h	1,92	6,28	2,83	9,97	3,41	13,84
G31 propane supply pressure	mm.w.c	370					
Consumption G31 (15ºC 10,13 m.a.c.)	kg/h	1,90	6,20	2,79	9,83	3,36	13,63
Power supply voltage		230 V / I ph / 50 Hz					
Index of protection (IP)		IP4xD					
Inlet temperature limit	ºC	+60ºC to -15ºC					

Note: Maximum air flow calculated for a ΔT = 15ºC and minimum air flow calculated for a ΔT = 50ºC

Options

- Compressors in tandem. This setting improves the management of stages, and therefore the energy efficiency of the unit.
- Assembly with mixing box and free-cooling:

  2 dampers (motorised):
  - MS: Outdoor air intake with damper, interlocked with return damper.

  3 dampers (motorised):
  - MA: Axial return and air extraction fan with duct (to prevent recirculation).
  - MC0: Lower MC0 radial centrifugal return fan.

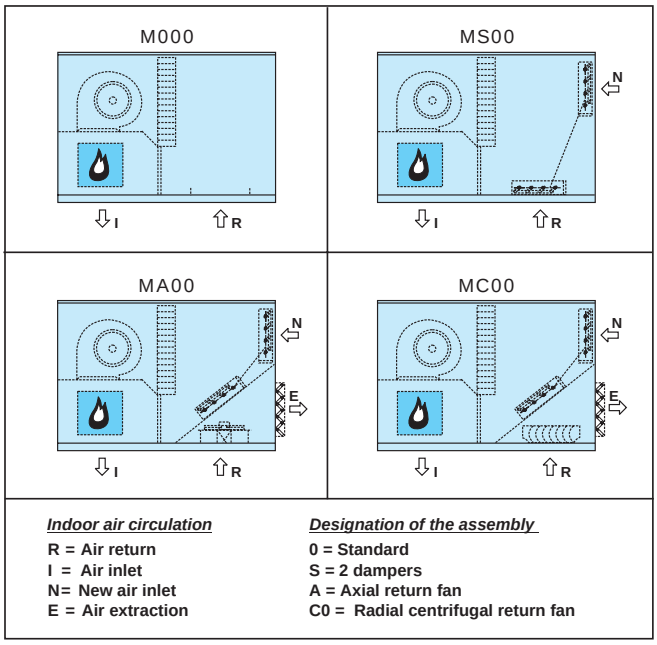

Indoor air circulation	*Designation of the assembly*
R = Air return	**0 = Standard**
I = Air inlet	**S = 2 dampers**
N= New air inlet	**A = Axial return fan**
E = Air extraction	**C0 = Radial centrifugal return fan**

- Outdoor coil protection grille.
- Coils (outdoor and/or indoor) with copper pipes and copper fins.
- Coils (outdoor and/or indoor) with copper pipes and aluminium fins with polyurethane and blygold polual coating.
- Thermal and acoustic isolation 50 mm thick, with fire classification Euroclase A2-s1, d0.
- Compressor with protection for low temperature (supplementary crankcase heater). This is compulsory if the outdoor temperature is lower than -8ºC WB.
- Electrical heater for protection of the components of the electric panel. This is compulsory if the outdoor temperature is lower than -8ºC WB. With an outdoor temperature ower than -16ºC WB will be compulsory a reinforced resistance.
- Dampers with spring for automatic closing in case of a tension cut. This is compulsory if the outdoor temperature is lower than -8ºC WB.
- Electrical heater for antifreeze protection of dampers of mixing boxs. This is compulsory if the outdoor temperature is lower than -12ºC WB.
- Tropicalised unit. It includes varnish for the elements in the electric panel, tropicalised indoor and outdoor fans.
- Condensates drain pan for the indoor circuit in stainless steel (standard pan in galvanised steel).
- High-powered axial fans in the outdoor circuit.
- Electronic EC axial fans in the outdoor circuit which adapt their rotation speed to the installation requirements, thereby reducing electricity consumption, the sound level at partial charge and improving the average seasonal output of the unit.
- High-pressure outlet fan of the indoor circuit (for available pressure above 30 mm.a.c). Centrifugal fans, coupling by pulleys and belts with an impeller with back-curved blades.
- Control of the overpressure with the MC0 assembly.
- Soft starter of the outlet fan which prolongs the set time mainly aimed at installations with cloth ducts. Compulsory for motors with an output of 15 kW and above.
- Stop-drop in the outdoor air intake.
- Gravimetrics filters G4.
- Opacimetric folded filters F6 to F9 + gravimetric filters G4.
- Differential pressostat for clogged filter detection (recommended).
- Electrical power supply with neutral.
- Energy meter.
- Numeration of components in the electrical panel.
- Numeration of wired.
- Smoke detecting station in accordance with the NF S 61-961 standard.
- Air quality probe for installation in the environment or in duct to enable measuring CO_2 and/or volatile compounds.
- Standardised pre-assembly frames made of galvanised steel panelling, thermally insulated. Adjustable height.
- Shock absorbers made of rubber.
- Skis for transporting in closed container.

Unit components

- Standard equipment
  - Casing made of galvanised steel metal with polyester paint, white colour RAL 7035. Thermal insulation 10 mm thick, fire classification M1.
  - Self-supporting frame and access panels to the electric panel, compressors, fans, etc.
- Outdoor circuit
  - Axial 2-speed fans directly coupled to the motor. Watertight motor class F, IP54 and internal thermal protection. Dynamically balanced propellers and outdoor protective grille.
  - Coil with copper pipes and aluminium fins.
- Indoor circuit
  - Centrifugal fans coupling by pulleys and belts. Two double-intake turbines, with an impeller with front-curved blades. Greased spherical bearings, with no maintenance required. Two electric motors with tensioner, class F, IP55 and internal thermal protection.
  - Reusable air filters, assembled on a frame.
  - Coil with copper pipes and aluminium fins.
  - Condensates drain pan in galvanised steel.
- Cooling circuit
  - Hermetic scroll-type compressor with sound insulation, assembled on antivibration mounts. Control of phase equilibrium and the direction of rotation.
  - Crankcase heater (heat pump units).
  - Four-way cycle reversing valves (heat pump units).
  - Anti-acid dehydrator filters.
  - Thermostatic expansion valves with external equalisation.
- Gas burner
  - Natural gas or propane gas burner designed in accordance with the standards in force in compliance with the Gas Directive 90/396 EEC.
  - Output control with proportional actuator 0-10V performed by the burner's own control.
  - Condensation boiler with premixing and modulation technology that allows performance close to 105% with regard to the lower heating value (LHV).
  - Combustion chamber in stainless steel AISI 430 and pipes for the hot gas exchanger and the smoke outlet manifold in stainless steel with a low carbon AISI 304L content to guarantee a high resistance to condensation.
  - The recovery pipes have a flat design and grooves to increase turbulence thus increasing the heat transfer coefficient and therefore reducing the fuel consumption.
- Protections
  - High and low pressure pressostats.
  - Compressor discharge temperature control.
  - Non-return valve built into the compressor.
  - Klixon in the compressor.
  - Differential pressostat for control of air flow.
  - Main door switch.
  - Magnetothermic protection switches for the compressor power line and fan motor.
  - Automatic switch in the control circuit.

Controls

CARRIERrtc electronic control

The CARRIERrtc control is basically comprised of a µPC MEDIUM control board, a graphic terminal pGD1, a TCO user terminal (optional) and sensors.

This system has a field-bus RS485 that allows the management of additional components.

A BMS card allows the connection to a centralised technical management system.

It also manages a local connection between units through a pLAN network (µPC MEDIUM Local Area Network), thus allowing communication of data and information for a maximum of 15 units.

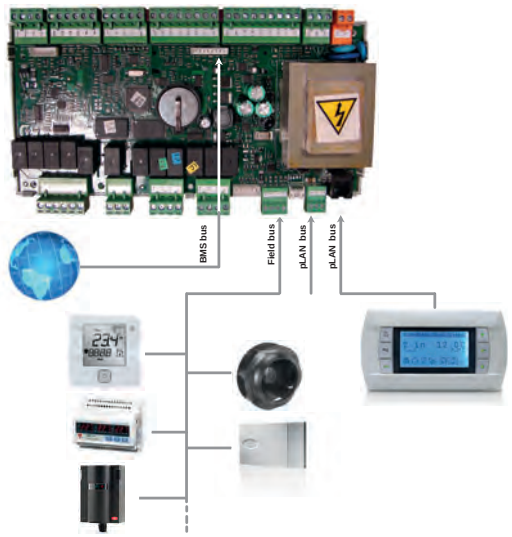

■ Main functions:

- Selection of the operating mode: heating / cooling.
- Selection of the setpoint.
- Permanent control of the operating parameters.
- View of the values measured by the probes.
- Timing of the compressors
- Defrosting management (in heat pump units).
- Operation in all seasons via the condensation and evaporation pressure control.
- Control of the outlet temperature.
- Compensation of the setpoint based on the outdoor temperature.
- Time and weekly schedule.
- Anti-fire safety device.
- Failure diagnosis and main alarm.

■ Optional functions:

This control allows controlling optional elements such as:

- Electronic outdoor fans.
- Supply and return electronic plug-fans.
- Outdoor air damper for renewing air, depending on the temperature of the mixing air or depending on the air quallity probe.
- Mixing box for thermal, enthalpic or thermoenthalpic free-cooling.
- Cooling recovery circuit for renewing the air.
- Rotary recovery operator.
- Auxiliary electrical heaters: one or two stages with on /off control or a stage with proportional control.
- Hot water coil with 3-way valve, with proportional or on /off control.
- Gas burner with one or two stages of proportional control.
- Humidifier with proportional or on/off control.
- Air flow controller (with centrifugal fans).
- Clogged filter detector.
- Smoke detection station.
- Refrigerant leak detector.
- Air quality probe for measuring CO_2 and/or volatile compounds.
- Energy meter.

■ pGD1 terminal:

This terminal, installed on the electric panel, allows:

- The initial programming of the unit.
- The modification of operating parameters.
- Unit ON / OFF.
- The selection of the operating mode.
- The setting of setpoints.
- On-screen display of controlled variables and sensor values measured.
- On-screen display of active alarms and historical record of alarms.

■ TCO user terminal (optional):

This terminal can be installed on the electric panel, instead of pGD1 terminal. In this case, the remote connection of the pGD1 terminal is posible. Please consult “Control options”.

TCO terminal allows:

- Unit ON / OFF.
- The selection of the operating mode.
- The setting of setpoints.
- The display of temperatures and humidity of the installation, outdoor temperature, outlet air temperature, CO_2 probe and opening of the outdoor damper.
- On-screen display of alarms codes.

Sound levels dB(A)

Sound power level

48EN/EH	241	321	361	242	322	362	420	485	540	600
Total dB(A)	90	90	91	88	88	89	94	95	95	95

Sound pressure level

Measurement conditions: in free field, measured at a distance of 5 metres, directivity 2 and at 1.5 metres from the ground.

48EN/EH	241	321	361	242	322	362	420	485	540	600
Total dB(A)	63	63	64	61	61	62	67	67	67	67

Note: The sound pressure level depends on the installation conditions and, as such, it only indicated as a guide. Values obtained according to the ISO 3744 standard.

Operating limits

Inlet air conditions	Cooling	Heating
Indoor coil heat pump		
Minimum	14ºC WB	10ºC
Maximum	22ºC WB	27ºC
Outdoor coil heat pump		
Minimum	12ºC *	-10ºC WB ***
Maximum	48ºC **	15ºC WB
Gas burner		
Minimum	-	-30ºC

* With a condensation pressure control operating down to -10ºC.
** With high powered axial fan operating up to 52ºC.
*** With outdoor temperatures below -8ºC WB it is compulsory to select the anti-freeze protection option for the electric panel.

PLEASE CONSULT YOUR SALES REPRESENTATIVE FOR DRAWINGS

Carrier

United Technologies

DESIGNING INNOVATIVE SOLUTIONS

OPEN PLANT MANAGEMENT OR ADVANCED OPTIMIZATION ?

CARRIER® PLANTCTRL™, BECAUSE YOU SHOULD NOT HAVE TO CHOOSE.

CONTROL SOLUTION

- Improved reliability
- Single accountability
- Easy operation
- Operating savings
- Performance & compliance
- Easy set-up

Since Willis Carrier developed the world's first modern air conditioning system in 1902, Carrier's engineering teams have been designing advanced solutions for your business. And **because you should not have to choose between open plant management and advanced optimization**, Carrier proposes an advanced control offer: Carrier PlantCTRL.

The Carrier PlantCTRL solution works with most standard plant configurations and integrates into all major Building Automation Systems.

The solution brings you the benefits of increased plant room efficiency and improved energy performance.

www.carrier.com

Controls

Type	Range	Page
Control Solutions		
	Carrier Energy Management solutions	848
NEW	Carrier Thermal Energy Storage system	850
	Fan coil controls overview	852
	Thermostats	854
	NTC controllers	856
NEW	WTC controllers	860
	Aquasmart Evolution	864

Carrier Energy Management solutions

Carrier Energy Management solutions provide end users with low energy, high performance and enhanced indoor air quality and comfort.
These energy management solutions are designed and developed with the support of engineers from Carrier Energy Management Centre of Excellence.
Their expertise ensure the solutions are fully tailored to meet the specific needs of each customer.

Key advantages

Maximum energy efficiency and lower cost of ownership
A highly monitored control system immediately lowers operating costs. By managing load shedding and equipment schedules, it can achieve annual energy savings of 15% to 35%*.

Scalability and flexibility
Carrier delivers a scalable and reliable automated control solution uniquely tailored to each business, based on an understanding of its specific needs.

Reliability
Carrier solutions reliably pilot equipment, maintaining peak functionality and thereby preventing unanticipated system and equipment failure.

Single accountability
Carrier designs, supplies, configures and maintains the installation and its operating system, providing customers with a single point of contact.

Optimal comfort
Automatic controls maintain optimal ambient conditions within a facility, for constant measured comfort for all occupants.

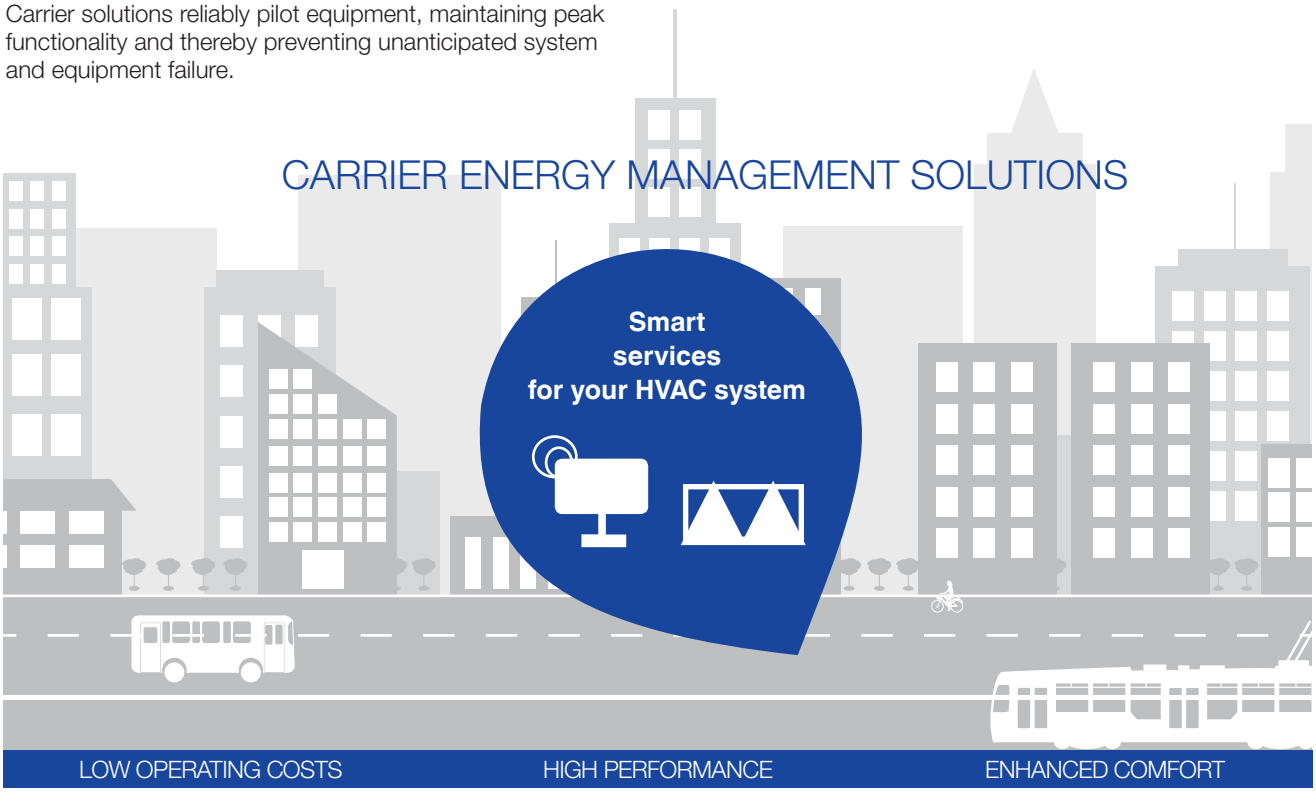

*Source: Carrier estimates from German existing control installations.

An extensive range of energy management solutions for an optimized HVAC system

Building
The full range of Carrier specific energy management solutions is compatible with every Building Management System (BMS) from third-parties. They are designed around open standard protocol for easy integration.

Plant and system management
From basic master/slave to full plant room control, Carrier's plant manager solutions are specifically designed to meet specific requirements.
Carrier energy management solutions also apply to your full HVAC system including the airside system.

Equipment management
Carrier's Product Integrated Controller (PIC) are controllers distributing intelligence for your HVAC equipment. They host and execute specific algorithms to enable interaction with Carrier plant controllers.

Designed by Carrier Energy Management Centre of Excellence

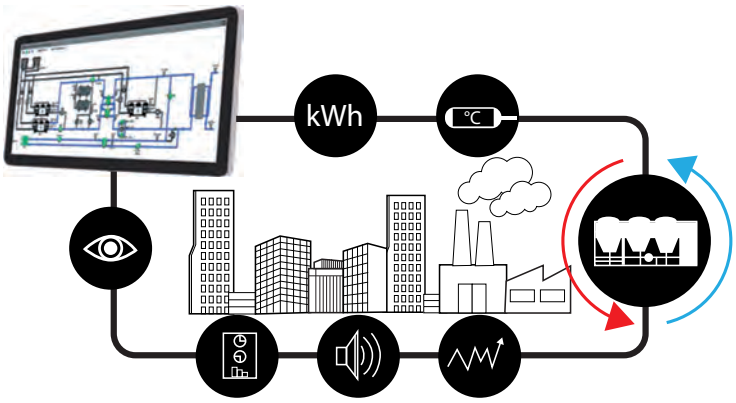

The Carrier Energy Management Centre of Excellence engineers cutting-edge smart services for optimizing the energy operating costs and the performance of your HVAC system.

The know-how of this pool of engineers is unique and proven with dual heating and automation in-depth knowledge. This team is also tightly connected to the first European Technopole 'Sophia-Antipolis' and involved in European research and innovation projects.

The Carrier Energy Management Centre of Excellence represents the kind of solid expertise that managing an HVAC system requires.

Carrier Thermal Energy Storage system

In a global context affected by a continuous increase of electricity prices and the challenge of reducing our environment impact, energy must be saved and controlled. For energy demand management and sustainable approach to intelligent buildings, Carrier proposes the Thermal Energy Storage technology (TES) by latent heat.

Carrier Thermal Energy Storage key benefits

- REDUCED MAINTENANCE & ELECTRICITY COSTS
- SUSTAINABLY DESIGNED
- TURNKEY SOLUTION

Solution concept

The TES technology consists of Phase Change Materials (PCM) used to store in nodules the cooling thermal energy produced by chillers.
By storing the thermal energy during the night and releasing it during the day, this solution allows using the electricity at the lowest prices and avoids the peaks. By spreading the thermal energy production over 24 hours, TES can reduce the capacity of the chillers by 30% to 70%*.

Histogram of a building's daily cooling needs and its electricity consumption profile

Without TES

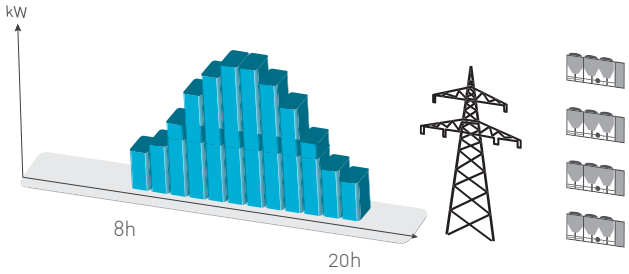

With TES

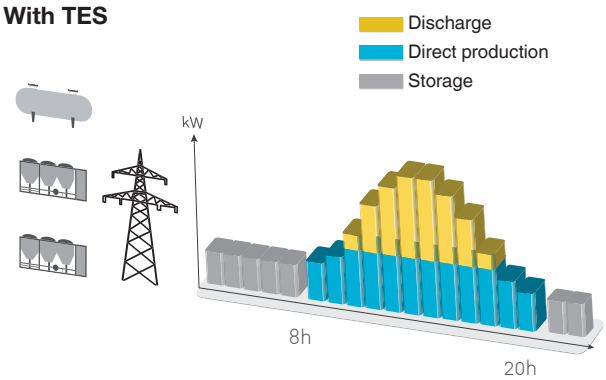

Storage solution shifts your electricity consumption from peak to off peak hours

Designed and implemented by the one of the worldwide leader in Thermal Energy Storage

+ 3 000 customers worldwide	**+ 65** countries	**+ 500MW** electricity saved **	**+ 6 000 000 kWh** daily transfer

*Measured differences between systems designed with and without TES
**Source: Carrier estimates based on existing TES solutions at customers' site.

Your HVAC system design with TES

The TES system along your chillers is composed of one or several tanks filled with spherical elements called nodules containing the Phase Changes Materials (PCM). The use of the PCM in nodules provides very high energy density and power exchange.

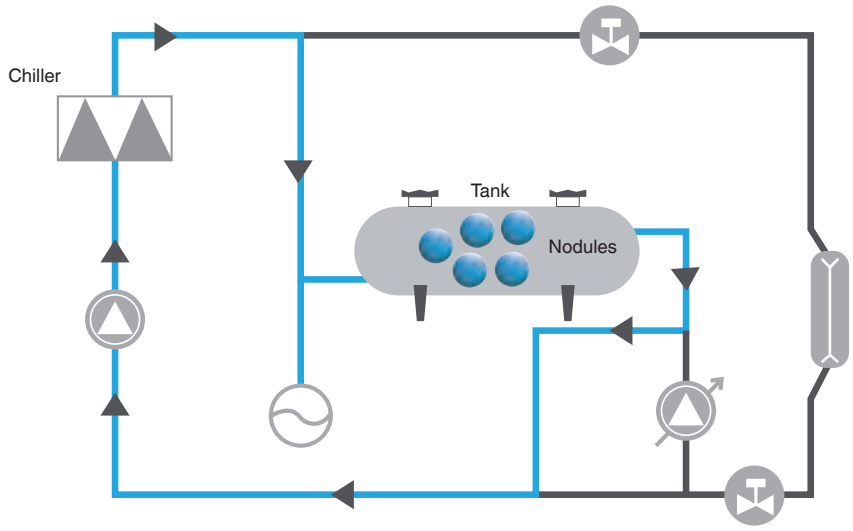

Nodules
- Core TES Technology
- Encapsulation of PCM
- Reliability and competitiveness

Control / Monitoring
This solutions is a smart system able to continuously optimize the performance of your installation.

Unique expertise on PCM
Carrier offers unique expertise on Phase Change Materials (PCM) resulting from over 30 years of R&D in partnership with universities and technical centers in Europe

A turnkey solution from project design to implementation

Carrier optimizes the design and the operation of your installation for each application as commercial or industrial buildings.

We assist the consulting engineers in adapting the hydraulic layout to each project: application, operating conditions and specific customer needs. Where necessary complementary technologies such as free cooling or energy recovery are integrated..

Project design | Needs analysis | Sizing project | Assessments savings | Hydraulic layout | Control system design | Sustainable design | Operating optimization

Fan coil controls overview

	Thermostat	NTC controllers	WTC controllers
Communication Protocols			
Carrier Communication Network (CCN) Aquasmart compatible		x	
BACnet			x
LON			x
Control algorithms			
On-off	x		
Proportional-integral		x	x
Carrier Energy saving algorithm		x	x
Fan control			
AC motors 3 speeds descreet	Type A&B	x	x
Automatic optimum fan speed selection	x	x	x
EC motors 3 speeds descreet	Type C&D	x	x
EC motors Variable speed		x	x
Water Valve management			
Air flow control only (no water valve)	x		
On-off actuators	x	x	x
Modulating actuators (3pts or 0-10V)		x	x
Main functions			
Setpoint control	x	x	x
Occupied/unoccupied mode	x	x	x
Frost protection mode	x	x	x
Window / Door contact input	x	x	x
Measurement of water inlet temperature for automatic seasonal changeover (2 pipes)	Type A&C	x	x
Automatic seasonal changeover (4 pipes and 2 pipes + electric heater)	Type D&B	x	x
Manual changeover	x	x	x
Frost protection mode	x	x	x
Continuous ventilation within dead-band	x	x	x
Periodical ventilation within dead-band	x	x	x
On-site configuration	x	x	x
Unit grouping Master/Slave	x	x	x
Cassette Louvers control		x	x
Supply air temperature monitoring limiting		x	x
Electrical heater loadshed		x	x
Dirty filter alarm		x	x
Alarm reporting		x	x
Indoor Air Quality control (CO_2 sensor)		o	o
Demand control ventilation (DCV) (0-10V fresh air valve)		o	o
Free cooling mode			o
Presence detection			o

Legend
x feature available as standard
o optional

	Thermostat	NTC controllers	WTC controllers
User interfaces			
Automatic or manual fan speed control	x	x	x
Operating mode selection	x	x	x
Occupancy (eco) button	x	x	x
Digital display		o	o
Remote control (infra-red)		o	o
CO2 sensor		o	o
Light sensor			o
Presence sensor			o
Easy connection RJ45 jack (on wall mounted UI)			x
Light & Blinds management			
Light power modules			o
Blinds power modules			o
Control kit			
On site control kit solution			o

Legend
x feature available as standard
o optional

Thermostats

Carrier electronic thermostat range is available for all Carrier hydronic terminals ranges:

- Type A - Two-pipe application with AC motors
- Type B - Four-pipe or two-pipe applications with electric heaters with AC motors
- Type C - Two-pipe application with EC motors
- Type D - Four-pipe or two-pipe applications with electric heaters with EC motors

The thermostat for fan coil units with EC motor option controls three configurable discrete speeds via an 0-10 V signal.

The electronic thermostat set range is from 10°C to 30°C, with the possibility to limit the temperature in public buildings where low energy consumption is a key requirement. This is done via a dip-switch inside the control (cooling range 23°C/30°C, heating range 10°C/21°C).

Features and advantages

- Auto fan: the control automatically sets the fan speed. If the room temperature is far from the set point, high fan speed is selected. As the room temperature approaches the desired value, the fan speed decreases to the minimum speed.
- Automatic changeover from cooling to heating mode, based on the water temperature, ensures that the ideal room temperature is maintained.
- Remote changeover - automatic changeover from cooling to heating mode, based on the remote signal from the monitoring system.
- Frost protection keeps the room temperature above a minimum level.
- Booster heating control optimisation (with electric heater option): with the water temperature below 30°C the system will be in heat demand mode and the electric heater is the only available heating source. If the water temperature is above 35°C the system will be in booster heating mode, energising water valve and electric heater together. This function is deactivated if the water temperature is above 45°C (the electric heater will be de-energised).
- Energy saving when the room is unoccupied, without the need to switch off the unit. If the energy-saving button is pressed, the actual set point will be modified as follows, without changing the position of the set point selection knob: ± 4 K.
- LED intensity (offices or light commercial applications) - 10 seconds after the last user interface use all LEDs are reduced in intensity. To avoid disturbing hotel guests, the thermostat can be configured from “Night Mode” to “Dark Mode”: 10 seconds after the last user interface use, all LEDs are switched off.
- Air sampling: with no fan request and the air sampling jumper in ON position, the control performs the air sampling function. The air in the room is moved, thermal stratification is reduced for a more reliable ambient temperature reading.
- Continuous fan (no fan request and continuous fan jumper ON): the control selects the fan speed, regardless of thermal station conditions. With fan in auto fan mode and control not in the demand phase, the fan permanently runs at low speed.
- External contact: A high voltage input signal for external contact is present. If the contact is activated, device behaviour depends on its configuration on site:
  - Presence detection energy saving mode is activated, room temperature is raised by 4 K in cooling mode and reduced by 4 K in heating mode.
  - Window contact: in OFF mode (window open), all outputs are disconnected (fan, valves, etc.) and only the frost protection function is active, if enabled.

NTC controllers

Carrier offers one of the market's most sophisticated and complete communicating controllers for hydronic fan coil ranges, the NTC controller, that is compatible with the full Carrier fan coil range.

For the customer and installer the same controller simplifies and eases installation and service operations whilst covering a wide range of hydronic system types and applications.

The controller can be applied and function as either a standalone control, as part of a larger CCN system application, or at the heart of a Aquasmart system functioning with the Aquasmart Touch Pilot System Manager.

Network communication

- The NTC communicating con-troller can be connected on an RS 485 bus, using the Carrier Comfort Network (CCN) protocol.
- Units equipped with the NTC controller can be part of the Aquasmart Evolution system.

Advanced functions

- Low Energy Consumption (LEC) variable speed control.
- The NTC controller can drive the fan speed continuously within a configurable range for optimal thermal and acoustic comfort.
- Hydronic control - The NTC controls both floating and fixed-point value actuator types (230 V on-off and 230 V three point).
- Demand controller ventilation (DCV) - On fan coils equipped with CO_2 sensors and fresh air dampers, the NTC controller can adjust the amount of fresh air admitted to the room, as required by the occupants.
- IAQ management - The NTC controller can control all features related to Indoor Air Quality that are included in Carrier terminal fan coil units.

Carrier Room Conroller (CRC2)

Simplified User Interface (SUI)

Zone User Interface (ZUI)

Infrared Remote Control (IR2) and receiver

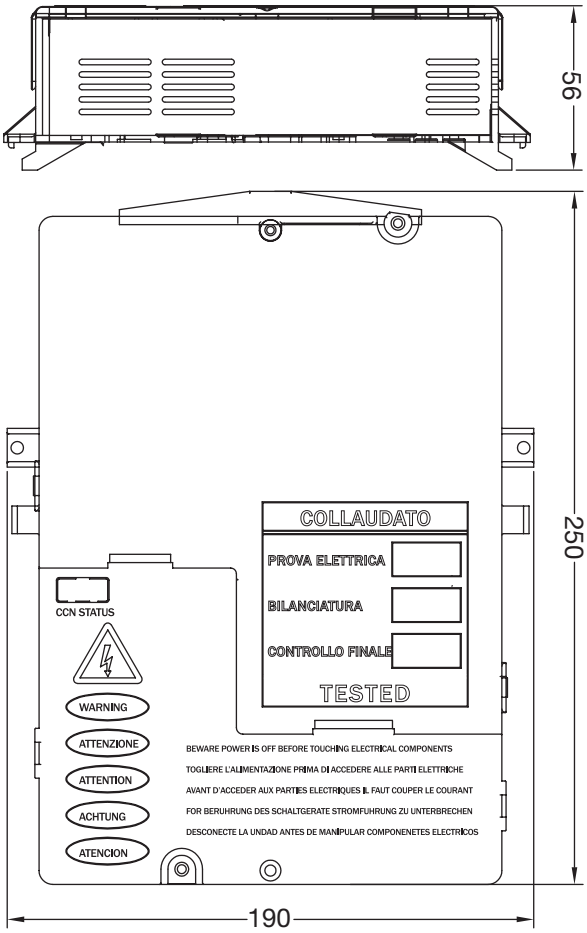

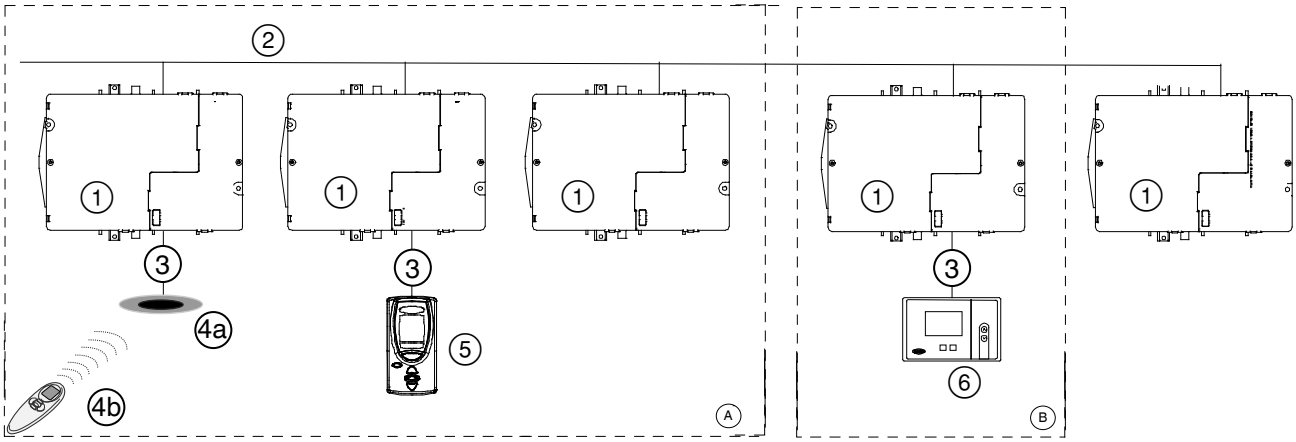

Legend
1 NTC controller
2 Secondary communication bus
3 User interface connection
4 IR2
5 ZUI2
6 CRC2
A Room A
B Room B

Features and advantages

- The NTC controller controls and optimises the operation of hydronic terminal fan coil units. It is a microprocessor-based CCN (Carrier Comfort Network) compatible communicating controller with energy-saving algorithms.
- Energy-saving algorithms manage water valve operation and fan speed control simultaneously to ensure minimum energy consumption whilst maximising comfort conditions for the occupant.
- Factory-installed on terminal fan coils
  The NTC controller is factory-installed on the terminal fan coil; the assembly is also factory-tested. As a result, field installation is extremely simple.
- A wide range of user interfaces
  Depending on the application, two user interface types can be selected:
  - A simplified wired analogue user interface (SUI) that can be wall-mounted
  - A wired communicating user interface (CRC2) that can be wall-mounted or incorporated in compatible terminal fan coils (42N)
  - An infrared user interface (IR2) for use together with a wall-mounted infrared received or a receiver incorporated on compatible terminal fan coils (42GW)
  - A multi-function user interface (ZUI) that can control comfort, lights and blinds within a Carrier system

WTC controllers NEW

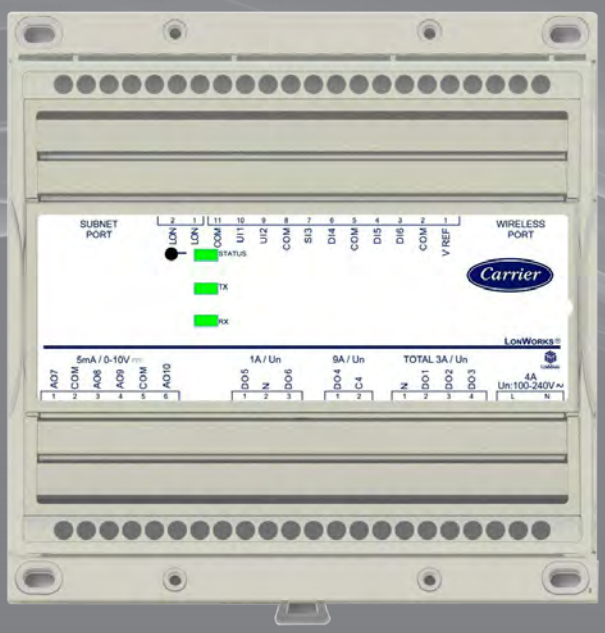

With Carrier's specific control algorithms, the Water Terminal Controller (WTC) combines best-in-class comfort solutions together with high energy efficiency management.

Designed for a variety of configurations and offered in a wide range of user interfaces, the WTC can fit every application and every need.

Control architecture

A variety of configurations for every application

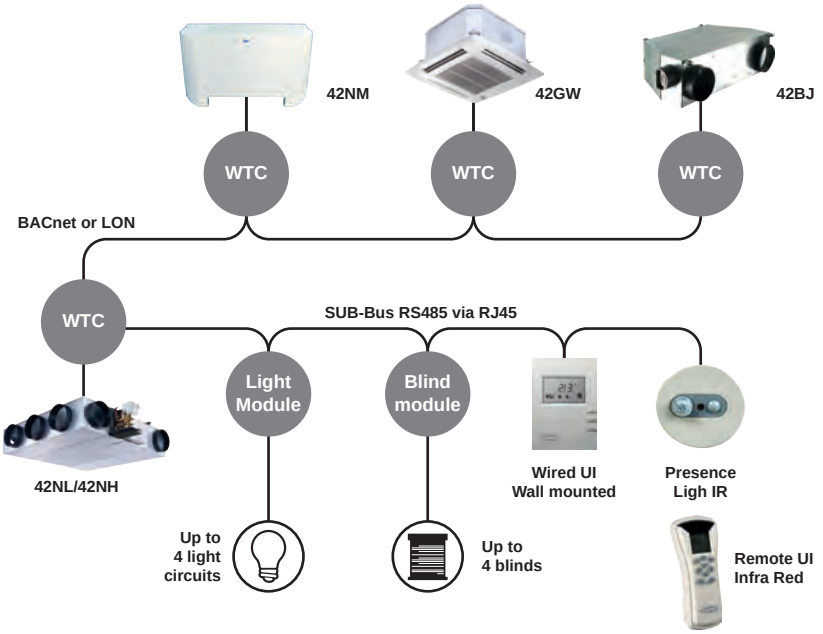

Features and advantages

- **High efficiency:** The WTC's energy saving algorithms control fan speed and manage water operation in parallel achieving optimal energy consumption whilst ensuring there is no esulting loss in comfort for occupants.
- **Easy installation:** The WTC is comptable with the full Carrier fan coil range. For Customers and installers the same controller simplifies and eases installation and service operations whilst covering a wife range of hydronic system types and applications. The WTC is factory installed on the terminal fan coil before factory testing of each individual terminal. As result, field installation is extremely simple.
- **Variety of configurations:** The controller can operate as either a standlone control, command and follow function for open spaces, or at the heart of a building management system.
- **User friendly user interface:** The user interface is avallable in a variety of configurations: no display, LCD display, temprature sensor, lights and blind control, etc.

Advanced functions

- **Low Energy Consumption (LEC) variable speed control:** The WTC can drive the fan speed continuously within a configurable range for optimal thermal and acoustic comfort.
- **Modulating hydronic control:** The WTC controls both floating and fixed-point value actuator types (230V on-off and 230V three point).
- **Demand controller ventilation (DCV) & IAQ management:** on fan coils equipped with CO_2 sensors and fresh air dampers, the WTC can adjust the amout of fresh air admitted to the room, as required by the occupants.
- **Lights and blind management modules:** The WTC supervises the interconnection of light modules & blinds modules, allowing the user to improve local comfort control with the same user interface as HVAC system.

Room controler - user interface

■ **Large choice of Room Controllers**

■ **Infrared Remote Control and receivers**

HVAC

HVAC + lights/Blinds

■ A range of user interfaces to meet all needs

	Room Control Interface			Infrared Remote Interface	
	WTC-RCI-S	**WTC-RCI-SF/ SQF**	**WTC-RCI-D/ DC/DM/DCM**	**WTC-IR**	**TC-IR-LB**
Temperature sensor	✓	✓	✓		
Setpoint offset		✓	✓	✓	✓
Fan speed	✓	✓	✓	✓	✓
With or without occupancy function		✓	✓	✓	✓
Operating mode		✓	✓	✓	✓
Light & blind control			✓		✓
Power supply from WTC	✓	✓	✓		
Quick connection	RJ45	RJ45	RJ45		
Local service tool			✓		
With or without motion sensor			✓		
LCS display			✓	✓	✓
Infrared receiver with status (LED & BUZZER)				✓	
Infrared receiver					✓

Aquasmart

Aquasmart Evolution is a complete hydronic heating, ventilating and air conditioning (HVAC) system ideal for residential and light commercial applications from offices, commerce to hotels and hospitals. It offers perfect comfort for building occupants whilst optimising economical operation for applications up to 2500 m². Larger installations with multiple systems can be managed and integrated within a single Building Management solution thanks to the new BACnet option capability (available as option in 2012).

An Aquasmart system consists of up to 128 terminal fan coil units, served by up to two chillers or heat pumps (master-slave), to supply cooling and/or heating to occupied spaces and fresh air handling units. The system manager can fully integrate and control up to eight Carrier fresh air handling units* (39SQ). Each fresh air plant can be associated with specific terminal fan coils and/or zones for optimum building use management with occupancy, controlling and minimising energy use.

Individual schedules can be set up and managed for each and all air treatment plants. The Aquasmart System Manager supplies building information enabling dynamic and precise control of the 39SQ's night-time free-cooling feature to further reduce building energy consumption.

* If air treatment unit is not supplied by Carrier, integration is limited to control via a digital output for the main fresh-air unit.

Features and advantages

- The Aquasmart Evolution system ensures significant energy savings combined with optimised user comfort by managing building zoning, occupancy and room temperatures in accordance with needs.
- Terminal fan coil units can be organised in up to 32 zones to optimise building management by zone requirement and according to building design conditions.
- The Touch Pilot System Manager – the brain and building user interface was designed to facilitate use and allow rapid access to manage and configure system operation to maximise energy savings at comfort conditions.
- System components are fitted with communicating controls allowing the System Manager to communicate with and obtain feedback on user needs and operation. Based on the system requirements the System Manager coordinates the system heating and cooling modes for maximum comfort and optimal energy consumption, respecting the comfort parameters and occupancy schedules for the building zones.
- The Aquasmart system offers affordable building HVAC system management featuring capabilities usually only available in more expensive solutions and requiring additional building-by-building programming development.

TOUCH Pilot

System design layout and configuration guide

- The System Manager is connected to the system components via a communication bus, and allows control of all system and individual terminal operating parameters.
- System configuration is simple through easily accessible menus. Unit grouping is managed by the network and requires no specific wiring to allow easy reconfiguration to suit later building layout modifications.
- The Aquasmart Evolution components are delivered complete, configured and factory-tested.

Energy savings

- The Aquasmart system controls offer superior comfort levels. By optimising and controlling the system components building owners and occupants can save energy and reduce their energy bill, contributing to a reduction in building carbon emissions.
- System control saving possibilities are further enhanced with a range of significant energy-saving features available at equipment level, such as the 39SQ plug-and-play fresh air handling unit with heat recovery technology, the use of reversible 30RQ air-to-water heat pumps for space heating, 61AF heat pumps for domestic hot water and a range of fan coil units with EC motor technology and variable fan speed control.
- Energy simulations conducted with a recognised software simulation program indicate that Aquasmart can achieve energy savings over a traditional non-communicating and non-optimised system. Case studies indicate that savings of 25% and beyond are possible. Each project merits its own assessment of the opportunities.

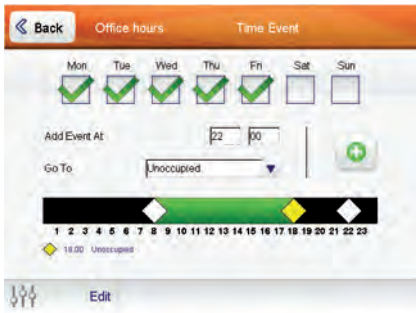

New System Manager

The Touch Pilot system manager is the user interface and allows building managers to control the Aquasmart system and associated components and features.

- Intuitive colour touch screen.
- A system set-up wizard leads installers through a number of easy intuitive steps to identify and configure the system and manage system set-up, operation and maintenance.
- Icon-driven menus easily and rapidly manage and maintain the HVAC system.
- Management of system parameters including cooling and heating set points (terminals and cooling and/or heating plants) and occupied and non-occupied periods.
- Optimisation of energy consumption, monitoring of component operation and reporting of system faults.
- Management of occupied/unoccupied time schedules and smart start features to ensure that comfort requirements are met from the very beginning of the occupied period.

■ The System Manager is compatible with a web browser, allowing user access to the system from a remote location such as a maintenance office within the building or from an off-site location where internet access is available. This facilitates ease-of-access and use and allows service and maintenance companies to offer remote service coverage without visiting the site, thus reducing carbon emissions due to transport.

■ The availability of a new Carrier Apple application (HVAC smart browser) extends the accessibility to smart phones and tablets.

System selection

■ The Aquasmart system is easy to select and configure with all units supplied from the factory with pre-installed, pre-configured and pre-tested controls and valves. The installer only needs to adjust the system parameters to the local building or application needs - a task made even easier with the New System Manager.

■ Carrier has created a Quick Selection Guide that is available to rapidly identify and select the system components, facilitating the design process and saving time for designers and installers alike.

■ Please contact your local sales office for a copy of this guide.

Building Management System Integration

- The latest release of the Aquasmart Touch Pilot system manager enhances the capabilities to integrate Aquasmart systems with Carrier or third-party building management system front-end software. The new BACnet option allows access to read and read/write system parameters from the building management system facilitating integration of Aquasmart within the overall building management.

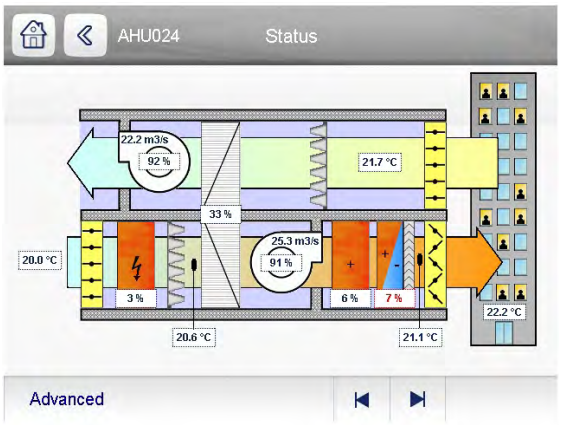

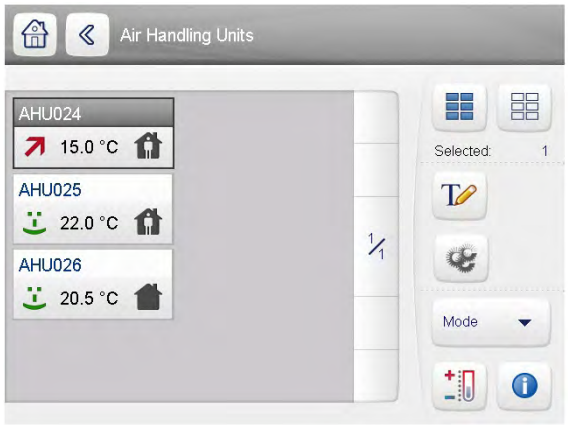

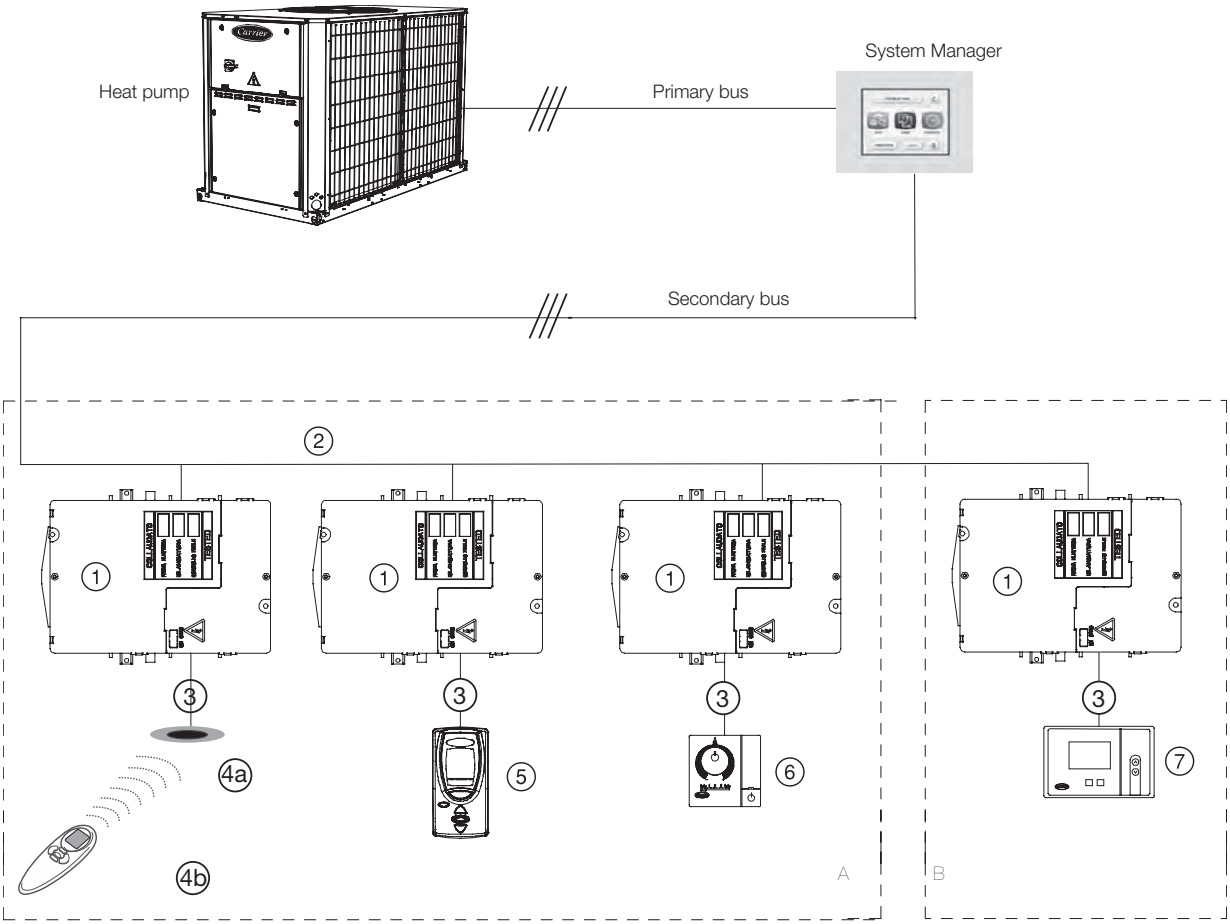

Legend:

1	NTC controller	6	SUI
2	Secondary communication bus	7	CRC2
3	User interface connection	A	Room A
4	Infrared controller IR2	B	Room B
5	ZUI2		

Notes

NOTES

NOTES

NOTES

NOTES

NOTES

www.carrier.com

Carrier HVAC Europe Catalogue 2016/2017 - English - April 2016. © Carrier Corporation 2016. All rights reserved.
Carrier reserves the right to change information and specifications contained in this document at any time and without prior notice.
Since standards, specifications and designs are subject to occasional change, please ask for confirmation of the information given in this publication.

Carrier

United Technologies

Carrier

United Technologies

DESIGNING INNOVATIVE SOLUTIONS

www.carrier.com